This is a digital copy of a book that was preserved for generations on library shelves before it was carefully scanned by Google as part of a project to make the world's books discoverable online.

It has survived long enough for the copyright to expire and the book to enter the public domain. A public domain book is one that was never subject to copyright or whose legal copyright term has expired. Whether a book is in the public domain may vary country to country. Public domain books are our gateways to the past, representing a wealth of history, culture and knowledge that's often difficult to discover.

Marks, notations and other marginalia present in the original volume will appear in this file - a reminder of this book's long journey from the publisher to a library and finally to you.

Usage guidelines

Google is proud to partner with libraries to digitize public domain materials and make them widely accessible. Public domain books belong to the public and we are merely their custodians. Nevertheless, this work is expensive, so in order to keep providing this resource, we have taken steps to prevent abuse by commercial parties, including placing technical restrictions on automated querying.

We also ask that you:

+ *Make non-commercial use of the files* We designed Google Book Search for use by individuals, and we request that you use these files for personal, non-commercial purposes.

+ *Refrain from automated querying* Do not send automated queries of any sort to Google's system: If you are conducting research on machine translation, optical character recognition or other areas where access to a large amount of text is helpful, please contact us. We encourage the use of public domain materials for these purposes and may be able to help.

+ *Maintain attribution* The Google "watermark" you see on each file is essential for informing people about this project and helping them find additional materials through Google Book Search. Please do not remove it.

+ *Keep it legal* Whatever your use, remember that you are responsible for ensuring that what you are doing is legal. Do not assume that just because we believe a book is in the public domain for users in the United States, that the work is also in the public domain for users in other countries. Whether a book is still in copyright varies from country to country, and we can't offer guidance on whether any specific use of any specific book is allowed. Please do not assume that a book's appearance in Google Book Search means it can be used in any manner anywhere in the world. Copyright infringement liability can be quite severe.

About Google Book Search

Google's mission is to organize the world's information and to make it universally accessible and useful. Google Book Search helps readers discover the world's books while helping authors and publishers reach new audiences. You can search through the full text of this book on the web at `http://books.google.com/`

Gj-A 572.95t

Library of the Museum

OF

COMPARATIVE ZOÖLOGY,

AT HARVARD COLLEGE, CAMBRIDGE, MASS.

Founded by private subscription, in 1861.

Deposited by ALEX. AGASSIZ.

No. 6988

April 2. 1879

TRANSFERRED TO GEOLOGICAL SCIENCES LIBRARY

TRANSACTIONS

OF THE

AMERICAN INSTITUTE OF MINING ENGINEERS.

VOL. VI.

MAY, 1877, TO FEBRUARY, 1878.

EASTON, PA.:
PUBLISHED BY THE INSTITUTE,
AT THE OFFICE OF THE SECRETARY, LAFAYETTE COLLEGE.

©1879.

PHILADELPHIA:
SHERMAN & CO., PRINTERS.

CONTENTS.

PAGE

OFFICERS AND MEMBERS, ... v–xxii
RULES, ... xxiii

Proceedings of Meetings.

WILKES-BARRE MEETING, May, 1877, ... 3
AMENIA MEETING, October, 1877, ... 10
PHILADELPHIA MEETING, February 1878, ... 18

Papers.

Hydraulic Mining in California. By A. J. BOWIE, JR., A.B., . . . 27
The Strength of Wrought Iron as affected by its Composition and by its Reduction in Rolling. By A. L. HOLLEY, PH.B., M.I.C.E., . . 101
The Manhattan Salt Mine, at Goderich, Canada. BY OSWALD J. HEINRICH, 125
The Late Operations on the Mariposa Estate. By CHARLES M. ROLKER, E.M., ... 145
Fluxing Silicious Iron Ores. By T. F. WITHERBEE, ... 164
A New Method of taking Blast-Furnace Sections. By T. F. WITHERBEE, . 170
Memoranda showing the percentage of the different Expense Accounts in Mining Hematite Ore at the Manhattan Mine, Sharon Station, New York. By J. F. LEWIS, ... 172
Notes upon the Drainage of a Flooded Ore-Pit. By JOHN BIRKINBINE, . 174
The Fire Clays and Associated Plastic Clays, Kaolins, Feldspars, and Fire Sands of New Jersey. By Prof. JOHN C. SMOCK, ... 177
Manganese Pig. By ROSSITER W. RAYMOND, PH.D., ... 192
Note upon the Cost of Construction of the Converting Works of the Edgar Thomson Steel Company, of Pittsburg, Pa., 1873–1875. By P. BARNES, 195
Note upon the "Blue" Process of Copying Tracings. By P. BARNES, . . 197
The Economy effected by the Use of Red Charcoal. By B. FERNOW, . . 199
On the Use of Red Charcoal in the Blast Furnace. By WILLIAM KENT, M.E., ... 206
The Nickel Ores of Orford, Quebec, Canada. By W. E. C. EUSTIS, A.B., S.B., 209
On the Manufacture of Artificial Fuel at Port Richmond, Philadelphia. By E. F. LOISEAU, ... 214

PAGE

Notes on the Salisbury (Conn.), Iron Mines and Works. By A. L. Holley, C.E., ... 220
Notes on the Iron Ore and Anthracite Coal of Rhode Island and Massachusetts. By A. L. Holley, C.E., ... 224
The Mesozoic Formation in Virginia. By Oswald J. Heinrich, . . 227
Copper Mining on Lake Superior. By Prof. Thomas Egleston, Ph.D., . 275
The Mechanical Work Performed in Heating the Blast. By Prof. B. W. Frazier, ... 313
The Eureka Lode of Eureka, Eastern Nevada. By W. S. Keyes, . . 344
The Eureka-Richmond Case. By Rossiter W. Raymond, Ph.D., . . 371
What is a Pipe Vein? By Rossiter W. Raymond, Ph.D., ... 393
Iron Manufacture in Mexico. By J. P. Carson, ... 398
The Action of Small Spheres of Solids in Ascending Currents of Fluids and in Fluids at Rest. By J. C. Bartlett, A.M., ... 415
Results of Analyses of Blast-Furnace Gases. By Charles A. Colton, E.M., 427
Classification of Coals. By Persifor Frazer, Jr., ... 430
Note on the Manufacture of Ferromanganese and the Blast Furnace. By F. Valton, ... 451
Can we Transmit Power in Large Amount by Electricity? By N. S. Keith, 452
Copper by Electricity. N. S. Keith, ... 458
Notes on Fire-Brick Stoves for Blast Furnaces. By John M. Hartman, . 463
On the Southern Limit of the last Glacial Drift across New Jersey and the adjacent parts of New York and Pennsylvania. By Prof. George H. Cook, ... 467
The New Works at Clausthal for Dressing Ores. By John C. F. Randolph, E.M., ... 470
Jet Pumps for Chemical and Physical Laboratories. By Prof. Robert H. Richards, ... 492
On "Buckshot" Iron. F. P. Dewey, ... 499
Report on a Standard Wire Gauge, ... 500
Analyses of some Tellurium Minerals. By E. P. Jennings, . . . 506
On Pulverized Zinc and its Uses in Analytical Chemistry. By Dr. Thomas M. Drown, ... 508
A Mining Laboratory. By Prof. Robert H. Richards, ... 510
An Edgestone Crusher for Analytical Samples. By Prof. Robert H. Richards, ... 518
Note upon the Cost of Two Blast Furnaces in the Cleveland District of England. By P. Barnes, ... 520
Note upon the Cost of Six Regenerative Furnaces. By P. Barnes, . . 523
Note upon the Cost of Iron Rails as made in 1866 in a leading English Railway Company's Rolling Mill. By P. Barnes, ... 524
Memoranda relating to the Boiler Account as kept during the construction of the Edgar Thomson Steel Works. By P. Barnes, ... 525
Missing Ores of Iron. By Persifor Frazer, Jr., ... 531
The Rothschönberger Stollen. By Rossiter W. Raymond, Ph.D., . . 542
Graphic Method of Keeping the Record of Working of a Blast Furnace. By William Kent, M.E., ... 551
The Ore-Deposits of Eureka District, Eastern Nevada. By William P. Blake, F.G.S., ... 554

AMERICAN INSTITUTE OF MINING ENGINEERS.

OFFICERS.

MAY, 1878.

President.

ECKLEY B. COXE.

Drifton, Jeddo P. O., Pa.

Vice-Presidents.

THOMAS EGLESTON,	New York City.
JOHN B. PEARSE,	Boston, Mass.
WILLIAM P. SHINN,	Pittsburgh, Pa.
(Term expires February, 1879.)	
JOHN F. BLANDY,	Philadelphia.
WILLIAM METCALF,	Pittsburgh, Pa.
ROBERT H. THURSTON,	Hoboken, N. J.
(Term expires February, 1880.)	

Managers.

ROBERT W. HUNT,	Troy, N. Y.
J. S. NEWBERRY,	New York City.
THOMAS F. WITHERBEE,	Port Henry, N. Y.
(Term expires February, 1879.)	
E. T. COX,	Indianapolis, Ind.
HENRY S. DRINKER,	Philadelphia.
ALEXANDER L. HOLLEY,	New York City.
(Term expires February, 1880.)	
BENJAMIN W. FRAZIER,	Bethlehem, Pa.
WILLIAM B. POTTER,	St. Louis, Mo.
GEORGE ASMUS,	New York City.
(Term expires February, 1881.)	

Secretary.

THOMAS M. DROWN,

Lafayette College, Easton, Pa.

Treasurer.

THEODORE D. RAND,

17 S. Third Street, Philadelphia.

Honorary Members.

David Thomas,	Catasauqua, Pa.
I. Lowthian Bell,	Middlesbrough, Eng.
L. Gruner,	Paris, France.
Peter Ritter v. Tunner,	Leoben, Austria.
Rich. Åkerman,	Stockholm, Sweden.

Life Members.

George Attwood,	The Scientific Club, London, England.
O. H Hahn,	Salt Lake City, Utah.
John E. Plater,	Eureka, Nevada.
Joseph Squire,	Helena, Shelby Co., Ala.
T. F. Witherbee,	Port Henry, Essex Co., N. Y.
Henry E. Wrigley,	Titusville, Pa.

Foreign Members.

Allport, Charles J.,	Sheffield, England.
Althans, Oberbergrath Ernst F.,	Breslau, Prussia.
Amiot, H.,	Clermont-Ferrand, Puy de Dôme, France.
Arbel, Lucien,	Rive de Gier, Loire, France.
Beaulieu, Ad. le Hardy de,	93 Rue d'Arlon, Brussels, Belgium.
Beaumont, Major Fred.,	2 Westminster Chambers, Victoria St., London.
Beck, Alexander,	2 Rue des Orphelins, Mons, Belgium.
Blackwell, Edward,‖	London.
Bodmer, J. J.,	23 The Grove, Hammersmith, London.
Brassert, Berghauptmann, Dr.,	Bonn, Prussia.
Brogden, James,	5 Queen's Square, Westminster, London.
Burkart, Dr. I.,‖	Bonn, Prussia.
Burthe, P. L.,	14 Rue Duphot, Paris, France.
Copeland, C. J.,	Barrow in Furness, England.
Crossley, William,	Dalton in Furness, England.
Deby, Julien,	8 Lombard Street, London.
Fayn, Joseph,	Liége, Belgium.
Forbes, David,‖	London.
Frenzel, August,	Freiberg, Saxony.
Gaetzschmann, Prof. Moritz,	Freiberg, Saxony.
Gillon, Prof. Aug.,	47 Boulevard d'Avroy, Liége, Belgium.
Höfer, Prof. Hans,	Klagenfurt, Austria.
Henry, Adolph,	Rive de Gier, Loire, France.
Jordan, Prof. S.,	154 Boulevard Malesherbes, Paris, France.
Jossa, Prof. Nicholas,	St. Petersburg, Russia.

‖ Deceased.

KNOWLES, J. H., ... Newport, Monmouthshire, Wales.
KREISCHER, PROF. C. G., ... Freiberg, Saxony.
KUPELWIESER, PROF. FRANZ, ... Leoben, Austria.
LORSONT, J. B. A.,‖ . . . . . London.
MCPHERSON, GEORGE, Wednesbury Oak Iron Works, Tipton, Staffordshire, Eng.
MARTIN, E. P., Blaenavon Iron-works, near Newport, Monmouthshire, Wales.
MARTIN, PIERRE EMIL, ... 12 Rue Chaptal, Paris.
MONKS, FREDERICK, ... Warrington, England.
NEWBERRY, JAMES COSMO, ... Melbourne, Australia.
NICOLSKY, PROF. L., ... St. Petersburg, Russia.
NOBLET, A., ... 24 Rue d'Archis, Liége, Belgium.
PATERA, BERGRATH AD., . . Geologische Reichsanstalt, Vienna, Austria.
POSEPNY, F., ... Lugeck, 3, Vienna, Austria.
POURCEL, ALEXANDRE, ... Terrenoire, Loire, France.
PRIEST, J. R., ... Monrovia, Liberia.
RESIMONT, ARM., ... Seraing, Belgium.
RICHTER, PROF. THEODOR, ... Freiberg, Saxony.
ROGERSON, JOHN, ... Croxdale Hall, Durham, England.
ROLLAND, G., ... 23 Quai Voltaire, Paris, France.
SCHMIDT, DR. ADOLF, ... 2 Plöckstrasse, Heidelberg, Baden.
SCHULZ, WILLIAM, ... Berlin, Prussia.
SERLO, BERGHAUPTMANN, DR., . 89 W. Wilhelmstrasse, Berlin, Prussia.
SONTAG, HUGO, ... Cologne, Prussia.
STRONGITHARM, AUG. H., ... Barrow in Furness, England.
VALTON, FERDINAND, ... 20 Rue Lepeletier, Paris, France.
WENDEL, H. DE, ... Hayange, Lorraine, Prussia.
WESTRAY, JOHN, . . . Carlin How, near Salisbury by the Sea, England.
WHITWELL, THOMAS,‖ . . . . . Stockton-on-Tees, England.
WILLIAMS, EDWARD, . . Cleveland Lodge, Middlesbro'-on-Tees, England.
WINTER, ADOLPH, ... Wiesbaden, Germany.
WITTELSBACH, OTTO, . . Taegerweilen, Canton Thurgau, Switzerland.
YBARROLA, J. RAMON DE, ... City of Mexico.

Members and Associates.

JANUARY, 1879.

THOSE MARKED THUS * ARE MEMBERS; MARKED THUS † ARE ASSOCIATES.

*ABADIE, EMILE R., . Orinoco Expl. and Mining Co., 426 Walnut St, Phila.
*ABBOTT, J. J., JR., ... Lake City, Colorado.
*ABBOTT, JAMES W., ... Lake City, Colorado.
*ADAMS, J. M., ... P. O. Box 640, San Francisco, Cal.
*AGASSIZ, PROF. ALEXANDER, ... Cambridge, Mass.
*ALDRICH, TRUMAN H., ... Montevallo, Shelby Co., Ala.
*ALEXANDER, FLORIAN, . . . Passaic Chemical Co., Newark, N. J.
*ALEXANDER, JOHN S., ... 1935 Arch Street, Philadelphia.
*ALLEN, CHARLES F., ... 342 Fourth Street, Cincinnati, Ohio.
*ANDERSON, R. J., ... Pittsburgh, Pa.
†ARNOLD, J. B., . Pennsylvania Lead Co., 44 Wood Street, Pittsburgh, Pa.

‖ Deceased.

*Ashburner, Charles A., . . 9 Woodland Terrace, Philadelphia.
*Ashburner, William, . . . 1014 Pine Street, San Francisco, Cal.
*Asmus, George, ... Room 9, 132 Nassau St., New York City.
*Attwood, George, . The Scientific Club, 7 Saville Row, London, England.
*Ayres, W. S., . . . New Jersey Steel and Iron Co., Trenton, N. J.

†Baldwin, S. C., . . Cleveland Rolling Mill Co., Cleveland, Ohio.
*Baldwin, S. W., ... Yonkers, N. Y.
*Barnes, Phineas, ... Plainfield, N. J.
*Barron, S. A., ... Cheltenham, Mo.
†Barros, Luiz de Souza, ... School of Mines, New York City.
*Bartlett, J. C., ... Taunton, Mass.
*Bayles, James C., ... 83 Reade Street, New York City.
†Behr, Edward, ... 155 Harrison Street, Brooklyn, N. Y.
*Bender, Charles, ... 71 Broadway, New York City.
*Bender, R. W., ... East Boston, Mass.
*Bennett, Clarence M., ... Jenkintown, Montgomery Co., Pa.
*Bertolet, Alfred S., ... Crown Point, Essex Co., N. Y.
*Bierwirth, L. C., ... Dover, N. J.
*Billin, Charles E., ... 4039 Locust Street, Philadelphia.
*Billings, G. H., ... Norway Iron Works, Boston, Mass.
†Bingham, C. E., ... 25 West Main Street, Cleveland, Ohio.
*Binsse, Henry, ... 40 West Nineteenth Street, New York City.
*Birkinbine, John, . . . Pine Grove Furnace, Cumberland Co., Pa.
*Blair, Andrew A., ... 919 Chant Street, Philadelphia.
*Blake, Prof. F. C., ... Lafayette College, Easton, Pa.
*Blake, Prof. W. P., ... New Haven, Conn.
*Blandy, John F., ... 1711 Sydenham Street, Philadelphia.
†Bliss, Arthur W., ... Dunbar, Fayette Co., Pa.
*Bogart, John, ... 104 East Twentieth St., New York City.
*Bolton, Ogden, ... Canton, Ohio.
†Booth, Ely T., ... Mauch Chunk, Pa.
*Booth, Henry, ... Lockbox 614, Poughkeepsie, N. Y.
*Booth, Lloyd, ... Youngstown, Ohio.
*Borda, E., ... 826 Walnut Street, Philadelphia.
*Bovey, Prof. Henry T., . . 96 University Street, Montreal, Canada.
*Bowden, J. H., ... Lock Box 784, Wilkes-Barre, Pa.
*Bowie, A. J., Jr., ... P. O. Drawer 2220, San Francisco, Cal.
*Bowler, N. P., ... 9 Winter Street, Cleveland, Ohio.
*Bowman, Thomas E., ... Silverton, San Juan Co., Colorado.
*Bowron, James, ... South Pittsburgh, Tenn.
*Bowser, Prof E. A., . . . Rutgers College, New Brunswick, N. J.
*Boyd, C. R., ... Wytheville, Va.
*Boyer, Jerome L., ... Reading, Pa.
*Bradford, H., ... 2004 N. Twenty-second Street, Philadelphia.
*Bradley, G. L., ... 43 Sears Building, Boston, Mass.
*Bramwell, J. H., ... Quinnimont, W. Va.
*Bredemeyer, Dr. W., ... Salt Lake City, Utah.
†Brinckerhoff, Geo. C., ... School of Mines, New York City.
*Britton, J. Blodget, ... 339 Walnut Street, Philadelphia.
*Brodhead, Calvin E., ... Hickory Run, Carbon Co., Pa.

*Brodie, W. M., ... Alamos, State of Sonora, Mexico.
†Brooks, T. B., ... Newburgh, N. Y.
*Brosius, M. L., ... Lewistown, Pa.
*Brown, Alexander E., . . . 306 Euclid Avenue, Cleveland, Ohio.
*Brown, D. P., ... Lost Creek P. O., Schuylkill Co., Pa.
†Brown, Fayette, ... Cleveland, Ohio.
*Brown, Harvey H., ... Cleveland, Ohio.
*Bruen, Fred. E., ... Leadville, Lake Co., Colorado.
*Brush, C. F., ... 224 Prospect Street, Cleveland, Ohio.
*Brush, Prof. Geo. J., ... New Haven, Conn.
*Bryden, Andrew, ... Pittston, Pa.
*Brydges, F. H., . . Steel Co. of Canada, Londonderry, Nova Scotia.
*Buck. Stuart M., ... Coalburgh, Kanawha Co., W. Va.
†Buckley, Chas. R., . . . 112 Montague Street, Brooklyn, N. Y.
*Bulley, Reginald H., ... Canton, Ohio.
*Bullock, M. C., ... 145 Fulton Street, Chicago, Ill.
*Bunsen, Robert, Care German Banking Co., 86 W. Third St., Cincinnati, Ohio.
*Burden, I. Townsend, ... Troy, N. Y.
*Burden, James A., ... Troy, N. Y.
†Burke, M. D., ... 55 W. Fifth Street, Cincinnati, Ohio.
†Burnham, Wm., ... 218 South Fourth Street, Philadelphia.
†Butler, Cyrus, ... 24 Cliff Street, New York City.
*Butler, Hermon B., ... Ticonderoga, N. Y.
†Butler, William Parker, ... Berlin, Prussia.

*Caldwell, W. B., Jr., . . . Roane Iron Co., Chattanooga, Tenn.
*Cameron, J. G. M., . . . 87 Seventh Avenue, New York City.
*Cameron, James R., ... Osceola Mills, Clearfield Co., Pa.
*Campbell, Charles, ... Ironton, Ohio.
†Canfield, A. Cass, . . . 258 Madison Avenue, New York City.
*Canfield, E., ... Dover, N. J.
*Canfield, Fred. A., ... Dover, N. J.
*Carnegie, Thomas M., ... Pittsburgh, Pa.
*Carpenter, S. M., ... 382 Prospect Street, Cleveland, Ohio.
*Carson, J. P., ... Room 136, 71 Broadway, New York City.
*Carter, Frank, ... Pottsville, Pa.
*Case, William H., ... Port Henry, Essex Co., N. Y.
*Chamberlain, H. S., ... Chattanooga, Tenn.
*Champin, H., ... Châteauneuf de Mazenc, Drôme, France.
*Chance, H. Martyn, . . . 2433 Fairmount Avenue, Philadelphia.
*Cherry, William S., ... Streator, La Salle Co., Ill.
*Chester, Prof. A. H., . Hamilton College, Clinton, Oneida Co., N. Y.
*Chisholm, Henry, ... Cleveland, Ohio.
*Chisholm, Wilson B., ... Newburgh, Ohio.
*Chouteau, Pierre, ... Vulcan Iron Works, St. Louis, Mo.
*Church, Prof. John A., Ohio State University, P. O. Box 123, Columbus, O.
†Chynoweth, B. F., ... Rockland, Ontanagon Co., Mich.
*Clark, Ellis, Jr., ... Glendon Iron Works, Easton, Pa.
*Clark, Gaylord B., ... Mobile, Alabama.
*Clark, Henry G., . . . Box 7, New Brighton, Staten Island, N. Y.
*Clark, R. Neilson, ... Rosita, Colorado.

*Clarke, Thomas C., . . . 410 Walnut Street, Philadelphia.
*Claussen, F. F., . . . 564½ Camp Street, New Orleans, La.
*Clayton, Jas. E., ... Ore Knob, Ashe Co., N. C.
*Clayton, Joshua E., . . . P. O. Box 599, Salt Lake City, Utah.
*Clerc, F. L., ... Lehigh Zinc Works, Bethlehem, Pa.
†Cleveland, Orestes, ... Jersey City, N. J.
*Cogswell, W. B., ... Mine La Motte, Missouri.
*Colburn, Henry B., . . . Care W. F. Colburn, Cincinnati, Ohio.
†Collins, H. E., ... 175 Wood Street, Pittsburgh, Pa.
*Colton, Charles A., ... School of Mines, New York City.
*Cone, N. H., ... Nederland, Boulder Co., Colorado.
*Constable, C., ... Roane Iron Co., Rockwood, Tenn.
†Constant, Charles L., ... School of Mines, New York City.
†Conzelman, Wm. E., ... Leadville, Colorado.
*Cook, Edgar S., ... Warwick Iron Co., Pottstown Pa.
*Cook, Prof. George H., . . . State Geologist, New Brunswick, N. J.
*Cooper, Edward, ... 17 Burling Slip, New York City.
†Cornell, A. B., ... Youngstown, Ohio.
†Cornell, Geo. B., . . . 46 W. Forty-eighth Street, New York City.
*Corning, Erastus, ... 87 State Street, Albany, N. Y.
†Corning, Frederick G., . . 52 Fischerstrasse, Freiberg, Saxony.
*Coryell, Martin, ... Lambertville, N. J.
*Courtis, W. M., ... Wyandotte, Mich.
*Cox, Prof. E. T., ... State Geologist, Indianapolis, Ind.
*Coxe, Eckley B., ... Drifton, Jeddo P. O., Luzerne Co., Pa.
*Coxe, W. E. C., ... Reading, Pa.
*Crafts, Walter, ... Columbus, Ohio.
*Crawford, Hugh A., . . 502 N. Commercial Street, St. Louis, Mo.
*Crawford, John J., . . . Diamond Springs, El Dorado Co., Cal.
*Cremer, J. H., . . . North Chicago Rolling Mill Co., Chicago, Ill.
*Cresson, Dr. Charles M., . . . 417 Walnut Street, Philadelphia.
*Crowther, Benjamin, ... Etna, Allegheny Co., Pa.
*Croxton, Samuel W., ... Canal Dover, Ohio.
*Crusius, Otto H., . 21 Grafton Sq., Clapham, S. W., London, England.

*Daggett, Ellsworth, ... Salt Lake City, Utah.
*Daniels, Fred. H., . Washburn & Moen Manf'g Co., Worcester, Mass.
*Davenport, Russel W., Midvale Steel Works, Nicetown, Philadelphia.
*Davis, Chester B., . . . 1351 Washington Ave., St. Louis, Mo.
*Davis, E. F. C., ... Pottsville, Pa.
*De Crano, E. G., ... Union Club, San Francisco, Cal.
†Denegre, William P., ... 15 First Street, Troy, N. Y.
*De Saules, A. B., ... Dunbar, Fayette Co., Pa.
*Detwiller, H. J., ... Bethlehem, Pa.
*Dewees, John H., ... Lewistown, Pa.
*Dewey, Fred. P., ... 87 Olive Street, New Haven, Conn.
*Donaldson, Thomas, ... Boise City, Idaho.
*Douglas, James, Jr., ... Phœnixville, Pa.
*Dowd, Edward, ... Chattanooga, Tenn.
*Drinker, H. S., ... 210 South Fourth Street, Philadelphia.
*Drown, Dr. Thomas M., ... Lafayette College, Easton, Pa.
*Du Bois, Prof. Aug. Jay, ... New Haven, Conn.

*Dudgeon, William, . Steel Co. of Canada, Londonderry, Nova Scotia.
*Dudley, Dr. Chas. B., ... Altoona, Pa.
*Dudley, P. H., ... 27 W. Ninth Street, New York City.
*Duncan, James M., ... Chattanooga, Tenn.
*Durfee, W. F., ... Atlantic Hotel, Bridgeport, Conn.
*Duval, C. J., . . Care Leopard M'g Co., Cornucopia, Elko Co., Nevada.
†Dwight, George S., ... 87 Astor House, New York City.

*Edwards, J. Warner, ... Freiberg, Saxony.
*Egleston, Prof. Thomas, . . . School of Mines, New York City.
*Eilers, A., ... P. O. Box 748, Salt Lake City, Utah.
*Ellsworth, A. M., . . Care Union Iron Works, San Francisco, Cal.
*Emerson, B. F., ... Copper Falls, Keweenaw Co., Mich.
*Emerson, Prof. G. D., ... Rolla, Phelps Co., Mo.
*Emmons, S. F., . . P. O. Box 2218, Cheyenne, Wyoming Territory.
*Endlich, Dr. F. M., . . Smithsonian Institution, Washington, D. C.
*Engle, George U., ... El Moro, Colorado.
*Engelmann, Henry, ... La Salle, Ill.
*Estabrook, J. D., . . Engineer's Office, Fairmount Park, Philadelphia.
*Eurich, E. F., . . . Mansfield Valley P. O., Allegheny Co., Pa.
*Eustis, W. E. C., ... 4 Pemberton Square, Boston, Mass.
*Everts, Charles, ... Ore Hill, Litchfield Co., Conn.

*Faber du Faur, A., . . Room 9, 132 Nassau Street, New York City.
†Fairchild, A. C., ... P. O. Box 644, Scranton, Pa.
†Fellows, Walter A., . . . 41 Saunders Avenue, W. Philadelphia.
*Ferguson, E. M., ... 104 Fifth Avenue, Pittsburgh, Pa.
†Fernekes, Anton, ... St. Charles Hotel, Milwaukee, Wis.
†Fernow, Bernard, ... 374 Pacific Street, Brooklyn, N. Y.
†Field, Robert P., ... Cambria Iron Co., Johnstown, Pa.
*Firmstone, Frank, ... Glendon Iron Works, Easton, Pa.
*Firmstone, H., ... Longdale P. O., Allegheny Co., Va.
†Fisher, Clark, ... Trenton, N. J.
*Fisher, Harvey, ... Duncannon, Perry Co., Pa.
*Fleming, W. E., ... Cleveland, Ohio.
†Flickwir, David W., ... 226 German St., Philadelphia.
†Floyd, Fred. W., . . . P. O. Lock Box 93, Washington, D. C.
*Fohr, Franz, . . . Room 9, 132 Nassau Street, New York City.
†Foote, Herbert C., ... 1253 Forest Street, Cleveland, Ohio.
*Foote, Wallace T., ... Port Henry, Essex Co., N. Y.
*Ford, S. Alfred, . . . Edgar Thomson Steel Co., Pittsburgh, Pa.
*Forsyth, Robert, . . . North Chicago Rolling Mill Co., Chicago, Ill.
*Foster, Ernest Le Neve, ... Georgetown, Colorado.
*Frazer, Prof. P., Jr., ... 917 Clinton Street, Philadelphia.
*Frazer, Robert, Jr., ... Ashland, Schuylkill Co., Pa.
*Frazier, Prof. B. W., . . . Lehigh University, Bethlehem, Pa.
*Freeman, H. C., ... Alto Pass, Union Co., Ill.
†Freeman, William Coleman, . North Cornwall Furnace, Cornwall, Pa.
*Fritz, John, ... Bethlehem, Pa.
*Fronheiser, Jas. J., ... Johnstown, Pa
†Frost, George H., ... Tribune Building, New York City

*Fry, John E., ... Cambria Iron Co., Johnstown, Pa.
†Fuller, John T., ... Dallas, Luzerne Co., Pa.
*Fulton, John, ... Cambria Iron Co., Johnstown, Pa.

*Galigher, Joseph E., . . . Spanish Mine, Bingham Canyon, Utah.
†Galigher, W. G., ... Bingham, Utah.
*Gardner, G. Clinton, ... Altoona, Pa.
*Garlick, E. C., ... Indianapolis, Ind.
†Gatling, W. J., ... Marmora, Ontario, Canada.
*Gaujot, E., ... Eagle Harbor, Keweenaw Co., Mich.
†Gay, Samuel, ... Shenandoah, Schuylkill Co., Pa.
*Geist, A. W., ... Sandy, Salt Lake Co., Utah.
†Genth, F. A., Jr., . . . 1212 Fairmount Avenue, Philadelphia.
*George, Richard, ... Dover, N. J.
*Gibson, Victor R., ... Lafayette Park, St. Louis, Mo.
*Gill, George W., ... Columbus, Ohio.
*Gill, John L., Jr., ... 83 Wood Street, Pittsburgh, Pa.
*Gillmore, Gen. Q. A., . . . Army Building, New York City.
*Gogin, F. S., ... Norway Iron Works, South Boston, Mass.
*Gogin, George W., . . . Norway Iron Works, South Boston, Mass.
*Goodale, Charles W., ... Black Hawk, Colorado.
*Goodfellow, Dr. M. J., ... Oakland, California.
*Goodrich, Leven S., . . . D. Hillman & Sons, Nashville, Tenn.
†Goodwin, H. Stanley, ... Bethlehem, Pa.
*Goodyear, Watson A., ... San Francisco, Cal.
†Gowen, Franklin B., . . . 227 South Fourth Street, Philadelphia.
†Graham, Thomas, . . . 233 South Third Street, Philadelphia.
*Gray, George N., ... Huntington, Cabelle Co., West Va.
*Gridley, Edward, ... Wassaic, Dutchess Co., N. Y.
*Griffen, John, ... Phœnixville, Pa.
†Griffiths, Howard B., . . . 2327 Ridge Avenue, Philadelphia.
*Griscom, Samuel E., ... Pottsville, Pa.
*Guerard, Arthur R., . . . 5 Rutledge Avenue, Charleston, S. C.
†Guiterman, Franklin, . . . 131 John Street, Cincinnati, Ohio.

†Haas, Harry L., . . . 49 West Thirty-ninth Street, New York City.
*Hague, Arnold, ... 23 Fifth Avenue, New York City.
*Hague, J. D., . . . 240 Montgomery Street, San Francisco, Cal.
*Hahn, H. C., ... Lansing, Mich.
*Hahn, O. H., ... Salt Lake City, Utah.
†Haigh, J. Lloyd, ... 81 John Street, New York City.
*Hale, Albert W., ... 71 Broadway, New York City.
*Hall, Charles E., . . University of Pennsylvania, Philadelphia.
*Hall, Edward J., Jr., . . . 448 Franklin Street, Buffalo, N. Y.
†Hall, Robert W., . . No. 8 W. Fifty-sixth Street, New York City.
*Hamilton, Alexander, ... Drawer PP., Johnstown, Pa.
*Hamilton, Wm. G., ... 24 Broadway, New York City.
*Hammond, Charles L., ... Crown Point, Essex Co., N. Y.
†Hanna, M. A., ... Cleveland, Ohio.
*Harden, E. B., . . . 429 North Thirty third Street, Philadelphia.
*Harden, J. H., . . . University of Pennsylvania, Philadelphia.

*HARDEN, O. B., . . . 429 North Thirty-third Street, Philadelphia.
†HARKNESS, T. C., ... Wilkes-Barre, Pa.
†HARNICKELL, A., ... 28 Cliff Street, New York City.
*HARRINGTON, DR. B. J., . . 7 St. James Street, Montreal, Canada.
*HARRIS, JOSEPH S., ... Pottsville, Pa.
*HARRIS, WILLIAM J., ... Mont Clair, N. J.
*HARRISON, RUSSELL B., . . . U. S. Assay Office, Helena, Montana.
*HART, PROF. EDWARD, ... Lafayette College, Easton, Pa.
†HART, WILLIAM R, . . . 208 South Fourth Street, Philadelphia.
*HARTMAN, JOHN M., . . . 1235 North Front Street, Philadelphia.
†HARTRANFT, S. S., ... 2015 Spruce Street, Philadelphia.
†HARTSHORNE, J., ... P. O. Box 736, Johnstown, Pa.
*HARTSHORNE, PROF. WM. D., . Union Springs, Cayuga Co., N. Y.
†HASEGAWA, YOSHINOSUKE, . . 62 West Twelfth Street, New York City.
*HAWLEY, E. S., ... 7 Forest Avenue, Buffalo, N. Y.
*HAYDEN, W. B., ... Columbus, Ohio.
*HAYDON, J. C., ... Jeansville, Luzerne Co., Pa.
*HAYES, DR. S DANA, ... 4 State Street, Boston, Mass.
*HEARNE, FRANK J., ... Wheeling, West Va.
†HEARST, GEORGE, . Care B. B. Minor, 49 Nevada Block, San Francisco, Cal.
*HEINRICH, OSWALD J., . . Drifton, Jeddo P. O., Luzerne Co., Pa.
†HELLEBERG, FRANK S., . . . Mount Auburn, Cincinnati, Ohio.
†HEMINGRAY, WILLIAM, . . . Shamokin, Northumberland Co., Pa.
*HEMPHILL, JAMES, ... Pittsburgh, Pa.
*HERR, H. B., ... U. S. Engineer's Office, Memphis, Tenn.
*HERRICK, J. A., ... P. O. Box 1397, Nashua, N. H.
*HERRING, A., ... Coeymans, Albany Co., N. Y.
†HERRON, CAMPBELL B., ... Pittsburgh, Pa.
*HEWETT, GEORGE C., . . . Irwin's Station, Westmoreland Co., Pa.
*HEWITT, ABRAM S., ... 17 Burling Slip, New York City.
†HILDRETH, WALTER E., ... Flushing, Long Island, N. Y.
*HILL, JOHN W., ... Niles Tool Works, Hamilton, Ohio.
*HILL, LESLIE C., . . . Bartholomew House, London, E. C., England.
*HILLMAN, JOHN H., . . . Tennessee Rolling Works, Lyon Co., Ky.
*HILLMAN, THOMAS T. . . . Tennessee Rolling Works, Lyon Co., Ky.
*HIMROD, CHARLES, ... Youngstown, Ohio.
*HOFFMAN, JOHN W., . . . 208 South Fourth Street, Philadelphia.
*HOLBROOK, F. N., ... 7 Jefferson Street, Brooklyn, N. Y.
†HOLBROOK, LEVI, ... P. O. Box, 536, New York City.
*HOLLEY, A. L., ... 239 Broadway, New York City.
†HOLLIS, WILLIAM, ... 195 Amity Street, Brooklyn, N. Y.
*HOLLOWAY, J. F., ... Cleveland, Ohio.
*HOOPER, WM., ... Ticonderoga, N. Y.
*HORTON, N. W., ... 21 Park Row, New York City.
*HOWE, HENRY M., ... 20 First Street, Troy, N. Y.
*HUGHES, D. T., ... Nevada City, Cal.
*HULBERT, EDWIN J., ... Middletown, Conn.
*HULST, NELSON P., ... Milwaukee, Wis.
*HUMPHREY, H. C., ... 113 Walnut Street, Philadelphia.
†HUMPHREYS, A. W., ... 42 Pine Street, New York City.
*HUNT, JOSEPH, ... Catasauqua, Pa.

*Hunt, Joshua, ... Catasauqua, Pa.
*Hunt, Robert W., Albany & Rensselaer Iron and Steel Co., Troy, N. Y.
*Hunt, Dr. T. Sterry, . . . 32 Durocher Street, Montreal, Canada.
*Hunter, Joseph L., ... 426 Walnut Street, Philadelphia, Pa.
†Hutton, Fred. R., . . 6 West Thirty-third Street, New York City.

*Ihlseng, M. C., . . . 151 E. Thirty-third Street, New York City.
†Ingham, William A., ... 320 Walnut Street, Philadelphia.
*Inman, Alvin L., ... Crown Point, Essex Co., N. Y.
*Irving, Prof. Roland D., . . University of Wisconsin, Madison, Wis.

*James, Samuel, Jr., ... Ore Knob, Ashe Co., N. C.
*Janin, Henry, ... Occidental Hotel, San Francisco, Cal.
*Janin, Louis, ... 310 Pine Street, San Francisco, Cal.
*Janney, Morris P., ... Pottstown, Pa.
*Jenkins, George, . . . Bethlehem Iron Works, Bethlehem, Pa.
*Jennings, Ed. P., ... Cornell University, Ithaca, N. Y.
*Jernegan, J. Leonard, ... La Grange, Stanislaus Co., Cal.
*Johnson, David A., . . . Broad Top City, Huntingdon Co., Pa.
*Johnson, J., C. W. & V. Coal Co., 41 West Van Buren Street, Chicago, Ill.
*Jones, B. F., ... Pittsburgh, Pa.
*Jones, Thomas D., ... Hazleton, Pa.
*Jones, W. R, . . . Edgar Thomson Steel Works, Pittsburgh, Pa.
†Joy, Douglas A., ... Ann Arbor, Mich.

†Kallenberg, A. H., ... Parrott City, La Plata Co., Colorado.
*Keeley, Jerome, . . . 218 South Fourth Street, Philadelphia.
*Keith, N. S., ... 41 Liberty Street, New York City.
*Kelly, Robert, ... P. O. Box 157, New York City.
†Kelly, William, . . . 9 West Sixteenth Street, New York City.
*Kempton, C. W., ... 16 Upton Street, Boston, Mass.
*Kent, Joseph C., ... Phillipsburg, N. J.
*Kent, William St. G., ... Phillipsburg, N J.
*Kent, William, ... 97 Wood Street, Pittsburgh, Pa.
*Kerr, Prof. W. C., ... State Geologist, Raleigh, N. C.
*Keyes, W. S., ... P. O. Box 1716, San Francisco, Cal.
*Kimball, Dr. J. P., ... Lehigh University, Bethlehem, Pa.
*Kirchhoff, Charles, Jr., . . . 4 Hudson Street, Hoboken, N. J.
*Kittoe, E. F., ... 50 State Street, Chicago, Ill.
*Koenig, Prof. George A., . University of Pennsylvania, Philadelphia.
*Kudlich, Edgar, . . . Drifton, Jeddo P. O., Luzerne, Co., Pa.
*Kyle, Robert, ... P. O. Box, 660, Atlanta, Ga.

*Lamborn, Dr. Robt. H., . . . 216 South Fourth Street, Philadelphia.
*Land, William J., ... P. O. Box 305, Atlanta, Ga.
*Lauder, George, ... Larimer Station, P. R. R., Pa.
†Lauder, William, ... Riddlesburg, Bedford Co., Pa.
*Laughlin, F. B., ... P. O. Box, 259, Pittsburgh, Pa.
*Laureau, L. G., ... 239 Broadway, New York City.
*Leavitt, E. D., Jr., . . . 143 Magazine Street, Cambridgeport, Mass.
*Lee, R. H., ... Lewistown, Pa.
*Lee, Richard Henry, ... 1525 Spruce Street, Philadelphia.
*Lehman, Ambrose E., . . . 225 South Sixth Street, Philadelphia.

*Leisenring, John, ... Mauch Chunk, Pa.
*Lesley, Prof. J. P., . . State Geologist, 1008 Clinton Street, Philadelphia.
*Leverich, Gabriel, ... 265 Macon Street, Brooklyn, N. Y.
*Lewis, James B., ... Dover, N. J.
*Lewis, James F., ... Amenia, Dutchess Co., N. Y.
*Locke, J. M., ... Homansville, East Tintic, Utah.
*Lockwood, Geo. P., ... P. O. Box 731, Salt Lake City, Utah.
*Loiseau, E. F., ... 1944 North Eighth Street, Philadelphia.
†Lord, N. W., ... Riverside, Cincinnati, Ohio.
*Lorenz, William, ... 227 South Fourth Street, Philadelphia.
†Lowe, S. B., ... Chattanooga, Tenn.
*Lyman, Benjamin Smith, ... Yokohama, Japan.
†Lyman, Frank, Care A. A. Low & Bros., 31 Burling Slip, New York City.

*McClellan, Arthur, . . . Drifton, Jeddo P. O., Luzerne Co., Pa.
†McClintock, Andrew H., ... Wilkes-Barre, Pa.
*McCormick, Henry, ... Harrisburg, Pa.
*McCreath, Andrew S., . . . 223 Market Street, Harrisburg, Pa.
*McDermott, Walter, ... Silver City Montana Territory.
*McFadyen, John, ... Johnstown, Pa.
*McIntire, Dr. Charles, Jr., ... Easton, Pa.
†McIntire, Henry M., ... Menlo Park, N. J.
*McKee, Wm. Weir, ... Drifton, Jeddo P. O., Luzerne Co., Pa.
*McLeavy, John, ... Dunbar, Fayette Co., Pa.
†McMillan, Emerson, ... Ironton, Ohio.
*McNair, Thomas S., ... Hazleton, Pa.
*Macdonald, Charles, ... 52 Wall Street, New York City.
*Macfarlane, Thomas, ... Actonvale, Quebec, Canada.
*Mackintosh, James B., ... 55 Garden Street, Hoboken, N. J.
*MacMartin, Archibald, . . . 168 Fifth Avenue, New York City.
*Macy, Arthur, ... 26 Cedar Street, New York City.
*Maffet, W. R., ... Wilkes-Barre, Pa.
*Maltby, William, ... Braidwood, Will Co., Ill.
*Manthey, William, ... South Pittsburgh, Tenn.
†Marshall, Benjamin, ... Sandusky, Ohio.
*Marvin, Selden E., ... Albany, N. Y.
*Mathews, Oliver, ... Silverton, Colorado.
*Maury, M. F., ... Charleston, Kanawha Co., West Va.
*Maxon, John H., ... 324 North Third Street, St. Louis, Mo.
*May, William A., ... Lock Box 173, Scranton, Pa.
*Maynard, George W., ... 24 Cliff Street, New York City.
†Meeker, A. B., ... 92 Washington Street, Chicago, Ill.
†Meeker, R. A., ... Plainfield, N. J.
*Meier, E. D., ... 26 North Main Street, St. Louis, Mo.
*Meier, John W., ... 26 North Main Street, St. Louis, Mo.
*Meister, Herman, . Meramec St. and Pennsylvania Ave., St. Louis, Mo.
*Mercur, Frederick, ... Wilkes-Barre, Pa.
*Merry, Henry, ... Negaunee, Marquette Co, Mich.
*Metcalf, William, ... Pittsburgh, Pa.
*Meyer, Arthur H, . St. Louis Smelting and Refining Co., St. Louis, Mo.
*Mickley, Edwin, ... Hokendauqua, Pa.
*Mickley, J. W., ... Hokendauqua, Pa.

*Miles, Fred. P., . . . Copake Iron Works, Columbia Co., N. Y.
*Miller, Reuben, ... Pittsburgh, Pa.
*Millholland, James A., ... Mount Savage, Md.
*Mills, James E., . . Care Major O. C. James, Rio de Janeiro, Brazil.
*Moffat, Ed. S., ... Stanhope, N. J.
*Montague, Dwight P., ... Chattanooga, Tenn.
*Moore, James, . . . Sixteenth and Buttonwood Streets, Philadelphia.
*Moore, Philip N., ... Leadville, Colorado.
†Morewood, Henry Francis, . . . P. O. Box 2087, New York City.
*Morgan, Charles H., ... Worcester, Mass.
*Morgan, T. R., ... Alliance, Ohio.
*Morrell, D. J., ... Johnstown, Pa.
†Morris, Israel W., ... 238 South Third Street, Philadelphia.
†Morris, Gouvernkur W., . 7 West Thirtieth Street, New York City.
*Morris, Prof. John L., ... Cornell University, Ithaca, N. Y.
*Morris, S. Fisher, ... Quinnimont, West Va.
*Munroe, Prof. Henry S., ... School of Mines, New York City.
*Murphy, John G., Orinoco Exploring and Mining Co , 426 Walnut St., Phila.
*Myers, Santiago, ... 110 Liberty Street, New York City.

†Nambu, Kiugo, ... 62 West Twelfth Street, New York City.
*Neilson, William G., ... 3703 Walnut Street, Philadelphia.
*Neu, Gustave S., ... 3 Maiden Lane, New York City.
*Newton, Isaac, ... 49 Wall Street, New York City.
*Nichols, Edward, ... Tarrytown, N. Y.
*Nichols, Ralph, ... Hukill Mine, Idaho Springs, Colorado.
*Norwood, Prof. Charles J., . . . Bethel College, Russelville, Ky.
*Nourse, Charles J., ... Columbia, Lancaster Co., Pa.

*Olcott, E. E., Orinoco Exploring and Mining Co., 426 Walnut St., Phila.
*Oliphant, F. H., Jr., ... Pardoe, Mercer Co., Pa.
*Oliver, Henry W., ... Pittsburgh, Pa.
†Oliver, Gen. Paul A., ... Wilkes-Barre, Pa.
*Ordway, Prof. J. M., . . . Institute of Technology, Boston, Mass.
†Owen, Frederick N., ... Nyack, Rockland Co., N. Y.
*Oxnard, B. A., ... Water and Dock Streets, Brooklyn, N. Y.

*Page, William Byrd, ... Frankfort, Ky.
†Painter, Augustus E. W., ... Pittsburgh, Pa.
*Pardee, A., Jr., ... 303 Walnut Street, Philadelphia.
*Pardee, I. P., ... Stanhope, N. J.
*Park, James, Jr., ... Pittsburgh, Pa.
*Parkes, John C., . . North Chicago Rolling Mill Co., Chicago, Ill.
*Parkin, Charles, ... Pittsburgh, Pa.
†Parsons, Charles B., ... Cadet, Mo.
*Parsons, Charles O., . . Steel Works P. O., Dauphin Co., Pa.
†Patrick, William F., . . 1618 Washington Avenue, St. Louis, Mo.
*Pearce, Richard, ... Denver, Colorado.
*Pearse, John B., ... Hotel Pelham, Boston, Mass.
*Pechin, Edmund C., ... South Pittsburgh, Tenn.
†Perry, Nelson W., Care A. F. Perry, Third and Main Sts., Cincinnati, Ohio.
*Peters, John R., ... Dover, N. J.

*Pettee, Prof. William H., University of Michigan, Ann Arbor, Mich.
†Pettit, Henry, ... 1509 Walnut Street, Philadelphia.
*Pickands, H. S., ... Nelsonville, Ohio.
†Pierce, Willard Ide, . . . 2087 Madison Avenue, New York City.
*Pitman, S. Minot, ... College Hill, Mass.
*Plater, John E., ... Eureka, Nevada.
*Platt, Franklin, ... 615 Walnut Street, Philadelphia.
*Platt, Joseph C., Jr., . . . P. O. Box 575, Waterford, New York.
*Platt, W. G., ... 615 Walnut Street, Philadelphia.
*Pleasants, Gen. Henry, ... Pottsville, Pa.
*Polhemus, J. S., ... 59 State Street, Albany, N. Y.
*Pollock, Wm. B., ... Youngstown, Ohio.
*Porter, J. A., ... Eureka, Nevada.
*Pott, John N., ... Pottsville, Pa.
*Potter, Prof. William B., . . Washington University, St. Louis, Mo.
*Potts, Joseph, . . . Richmond Mine, Ruby Hill, Eureka, Nevada.
*Potts, J. Thorpe, ... 119 S. Fourth Street, Philadelphia.
*Powell, Maj. J. W., ... Washington, D. C.
*Presbrey, Oliver S., ... Port Henry, Essex Co., N. Y.
†Price, Wm. H., ... Cleveland, Ohio.
*Prime, Prof. Frederick, Jr., . . 907 Walnut Street, Philadelphia.
*Proctor, John R., ... Lexington, Ky.
*Provis, John, ... Alamos, Sonora, Mexico.
*Pumpelly, Prof. Raphael, . . . P. O. Box 214, Newburgh, N. Y.
*Putnam, Douglas, Jr., ... Ashland, Boyd Co., Ky.

*Rader, Charles I., ... 133 South Sixth Street, Easton, Pa.
†Radford, W. H., ... New Rochelle, N. Y.
*Ramsay, Richard, ... Braidwood, Will Co., Ill.
*Ramsay, W. T., ... Avery, Munroe Co., Iowa.
*Rand, Addison C., ... 21 Park Row, New York City.
†Rand, Theodore D., . . . 17 South Third Street, Philadelphia.
*Randolph, John C. F., ... 35 Broadway, New York City.
†Rathburn, W. P., ... Chattanooga, Tenn.
*Raymond, R. W., ... 17 Burling Slip, New York City.
†Reed, S. Albert, . . . 6 E. Fifty-third Street, New York City.
*Rees, W. Marshall, ... P. O. Box 58, Stroudsburg, Pa.
*Reese, Jacob, ... Pittsburgh, Pa.
*Reynolds, George H., . . . 10 Cortlandt Street, New York City.
*Rhodes, F. B. F., ... Sault St. Marie, Ontario, Canada.
†Rhodes, James F., ... Cleveland, Ohio.
*Richards, George, ... Dover, N. J.
*Richards, Henry, ... Dover, N. J.
*Richards, Prof. R. H., . . . Institute of Technology, Boston, Mass.
*Richmond, H. B., ... 119 South Fourth Street, Philadelphia.
†Rickard, R. H., ... 19 Nassau Street, New York City.
†Ricketson, J. H., ... 33 Wood Street, Pittsburgh, Pa.
*Ricketts, P. De P., ... School of Mines, New York City.
*Ridgely, Charles, ... Springfield, Ill.
*Riezler, Otto, ... P. O. Box 598, South Pueblo, Colorado.
*Riggs, George W., Jr., . . . Washington University, St. Louis, Mo.

*Riley, Lewis A., ... Ashland, Schuylkill Co., Pa.
*Rittenhouse, J. H., ... Providence, Luzerne Co., Pa.
*Roberts, Percival, Jr., . . . 1985 Chestnut Street, Philadelphia.
*Robinson, Thomas W., . . Otis Iron and Steel Co., Cleveland, Ohio.
*Rockwell, Prof. A. P., ... 8 Fairfield Street, Boston, Mass.
*Roe, George G., ... Mineville, Essex Co., N. Y.
*Roe, Lewis H., ... Port Henry, Essex Co., N. Y.
*Roepper, Charles W., ... Chester, Morris Co., N. J.
*Rolker, Charles M., ... Reno, Nevada.
†Roney, C. Henry, . . . 952 North Seventh Street, Philadelphia.
*Rosecrans, Gen. W. S., ... San Rafael, Cal.
†Ross, William C., ... 165 Race Street, Cincinnati, Ohio.
*Rothwell, R. P., ... 27 Park Place, New York City.
*Roy, Andrew, ... Wellston, Jackson Co., Ohio.
*Russell, S. Howland, . . . 417 Fifth Avenue, New York City.
*Ryder, Charles M., . . Otis Iron and Steel Co., Cleveland, Ohio.

*Sackett, S. G., ... 108 Henry Street, Brooklyn, N. Y.
*Sanders, Richard H., ... 615 Walnut Street, Philadelphia.
†Sax, John K., ... Pittston, Luzerne Co., Pa.
†Scaife, Oliver P., ... 119 First Avenue, Pittsburgh, Pa.
*Sherman, George R., ... Port Henry, Essex Co., N. Y.
*Schaeffer, Prof. Chas. A., . . . Cornell University, Ithaca, N. Y.
*Schley, W. S., ... P. O. Box 404, Atlanta, Georgia.
†Schneider, Albert F., . . . P. O. Box, 748, Salt Lake City, Utah.
*Schropp, Abraham S., ... Bethlehem, Pa.
†Schwartz, J. E., . Pennsylvania Lead Co., 44 Wood St., Pittsburgh, Pa.
*Schwarz, T. E., ... Georgetown, Colorado.
*Scranton, W. H., ... Oxford, N. J.
*Scranton, W. W., ... Scranton, Pa.
*Sellers, William, ... 1600 Hamilton Street, Philadelphia.
*Setz, Gustav, ... Mine La Motte, Mo.
*Shaler, Prof. N. S., ... Cambridge, Mass.
*Sharples, S. P., ... 114 State Street, Boston, Mass.
*Sheafer, P. W., ... Pottsville, Pa.
*Sherman, George R., ... Port Henry, Essex Co., N. Y.
*Shimer, J. R., ... Phillipsburg, N. J.
*Shinn, William P., ... Pittsburgh, Pa.
*Shockley, Wm. H., ... New Bedford, Mass.
†Shoenbar, John, ... Eureka, Nevada.
*Silliman, Prof. B., ... New Haven, Conn.
*Silliman, Prof. J. M., ... Lafayette College, Easton, Pa.
*Singer, William H., ... Pittsburgh, Pa.
*Slade, F. J., ... N. J. Steel and Iron Co., Trenton, N. J.
†Smeaton, William Henry, . . . School of Mines, New York City.
*Smith, David, . . . Chief Engineer U. S. Navy, Washington, D. C.
*Smith, Fillmore M., . . 92 W. Onondaga Street, Syracuse, N. Y.
*Smith, Hamilton, ... 320 Sansome Street, San Francisco, Cal.
*Smith, T. Guilford, ... Union Iron Co., Buffalo, N. Y.
*Smith, William Allen, . Ansonia Brass and Copper Co., Ansonia, Conn.
*Smith, Gen. William Sooy, ... Maywood, Ill.
*Smock, Prof. John C., . . . Rutgers College, New Brunswick, N. J.

†SMYTHE, ROLAND M., ... 539 Henry Street, Brooklyn, N. Y.
*SNYDER, J. F., ... P. O. Box 564, Scranton, Pa.
†SPENCER, WILLIAM, ... Buck Mountain, Carbon Co., Pa.
*SPILSBURY, E. G., ... 2111 Norris Street, Philadelphia.
*SPIRIG, FRANK S., . Cooper, Hewitt & Co., 17 Burling Slip, N.Y. City.
*SQUIRE, EDWIN, ... Aurora, Portage Co., Ohio.
*SQUIRE, JOSEPH, ... Helena, Shelby Co., Alabama.
*STAFFORD, C. EDW., ... Steel Works P. O., Dauphin Co., Pa.
†STANTON, JOHN, JR., ... 76 Wall Street, New York City.
*STEARNS, I. A., ... Wilkes-Barre, Pa.
*STEIGER, JOHN, ... Drifton, Jeddo P. O., Luzerne Co., Pa.
*STEINBACH, E., ... Del Norte, Rio Grande Co., Colorado.
*STEVENSON, JOHN, JR., . Macintosh, Hemphill & Co., Pittsburgh, Pa.
*ST. JOHN, I. M., . . Chesapeake and Ohio Railroad, Richmond, Va.
†STOIBER, EDWARD G., . . . P. O. Box 33, Georgetown, Colorado.
*STOKES, JOSEPH, . . New Jersey Steel and Iron Co., Trenton. N. J.
*STONE, A. B., . . . Cleveland Rolling Mill Co., Cleveland, Ohio.
*STONE, F. I., ... Chattanooga, Tenn.
*STRAUCH, G. B., ... Pottsville, Pa.
†STRIEBY, WILLIAM, ... Santa Fe, New Mexico.
*SWEENY, W. S., ... Belvidere, N. J.
*SWEET, JOHN E., ... Cornell University, Ithaca, N. Y.
*SWEET, W. A., ... Syracuse, N. Y.
*SYMINGTON, W. N, ... P. O. Box 2011, New York City.
*SYMON, ROBERT R., Care Cabrera Roma & Co., Box 1092, San Francisco, Cal.
*SYMONS, W. R., ... Pottsville, Pa.

*TARR, H. G. H., ... Slateford, Northampton Co., Pa.
*TAYLOR, CHARLES L., . . . Cambria Iron Works, Johnstown, Pa.
*TAYLOR, W. J., ... Chester, N. J.
*TEFFT, WALTER, ... Mineville, Essex Co., N. Y.
†THACHER, ARTHUR, . . . 108 E. Thirty-sixth Street, New York City.
*THIES, A., ... Bowdon, Carroll Co., Ga.
*THOMAS, JAMES, ... Oxmoor, Jefferson Co., Ala.
*THOMAS, JOHN, ... Hokendauqua, Pa.
*THOMAS, SAMUEL, ... Catasauqua, Pa.
†THOMAS, W. G., JR., ... Brussels, Calhoun Co., Ill.
*THOME, SAMUEL W., ... Cordoba, Argentine Republic, S. A.
*THOMPSON, PROF. C. O., ... Worcester, Mass.
*THOMPSON, HEBER S., ... Pottsville, Pa.
†THOMPSON, MILTON S., ... Islip, Long Island, N. Y.
*THURSTON, PROF. R. H., . Stevens Institute of Technology, Hoboken, N. J.
*TORRANCE, J. FRASER, . . . P. O. Box 1706, Montreal, Canada.
*TORREY, DOLPHUS, ... 206 Walnut Place, Philadelphia.
*TOWER, A., ... Poughkeepsie, N. Y.
*TOWNSEND, WALTER D., Care American Clock Company, Yokohama, Japan.
*TROWBRIDGE, PROF. WM. P., . . . School of Mines, New York City.
†TUTTLE, H. A., ... H. B. Tuttle & Co., Cleveland, Ohio.
*TYLER, ALFRED L., ... Woodstock Iron Co., Anniston, Ala.

*VALENTINE, M. D., ... Woodbridge, N. J.
*VAN ARSDALE, W. H., . . . 53 Seventh Street, New York City.

*Van Lennep, D., ... Winnemucca, Humboldt Co., Nevada.
*Vannier Charles H., ... Succasunna, Morris Co., N. J.
*Vezin, Henry A., ... Frankford, Philadelphia.

*Waite, George R., ... 119 South Fourth Street, Philadelphia.
*Walker, James T., ... 736 Broadway, Albany, N. Y.
†Walker, John A., ... P. O. Box 21, Jersey City, N. J.
*Walsh, Edward, Jr., ... 2721 Pine Street, St. Louis, Mo.
*Walton, Henry C., ... Saratoga Springs, N. Y.
*Ward, Willard P., ... Savannah, Ga.
†Warner, L. E., ... Cincinnati, Ohio.
*Warren, H. L. J., Care A. W. Thompson, 40 California St., San Francisco, Cal.
*Wartenweiler, Alfred, Musquiz, Coahuita, Mexico (via Eagle Pass, Texas).
*Weberling, Charles, . Care Stetefeldt Furnace Co., San Francisco, Cal.
*Webster, Wm. R., . Rodman Furnaces, Roaring Springs, Blair Co., Pa.
*Weeks, Jos. D., ... Pittsburgh, Pa.
*Weimar, P. L., ... Lebanon, Pa.
*Weise, A. V., ... P. O. Box 1096, Salt Lake City, Utah.
*Welch, Ashbel, ... Lambertville, N. J.
*Wellman, S. T., ... Cleveland, Ohio.
†Wells, Calvin, ... Pittsburgh, Pa.
*Wendel, Dr. A., Albany and Rensselaer Iron and Steel Co., Troy, N. Y.
*Wendt, Arthur F., . . . 414 East Fifty-first Street, New York City.
*Werth, Jas. R., ... Clover Hill R. R. Co., Richmond, Va.
*West, A. G., ... Cedartown, Ga.
*Wetherill, J. Price, ... Pottsville, Pa.
*Wetmore, Edwin A., ... Marquette, Mich.
*Wheatley, Charles M., ... Phœnixville, Pa.
*Wheatley, William, Jr., ... Oyster Bay, N. Y.
*Wheeler, Moses D., ... Dayton, Nevada.
*Whitehill, H. R., ... Carson City, Nevada.
*Whiting, S B., ... Pottsville, Pa.
†Whitney, Eli, Jr., . . . Whitneyville Armory, New Haven, Conn.
*Wickes, George T., ... Selma P. O., Allegheny Co., Va.
*Wiestling, George B., ... Mont Alto, Franklin Co., Pa.
†Wight, Rezin A., ... P. O. Box 157, New York City.
*Wild, Henry Fearing, . . Chemical Copper Co., Phœnixville, Pa.
*Wilder, J. T., ... Chattanooga, Tenn.
*Wilhelm, A., ... Cornwall, Pa.
*Willard, H. B., ... Port Henry, Essex Co., N. Y.
*Williams, Prof. C. P., ... 113 Walnut Street, Philadelphia.
*Williams, Edward H., Jr., . . P. O. Box 271, Wilkes-Barre, Pa.
*Williams, Henry, ... Alma, Colorado.
*Williams, John T., . Forty-fourth Street and East River, New York City.
†Williams, T. M., ... Wilkes-Barre, Pa.
*Wilson, John A., ... 410 Walnut Street, Philadelphia.
*Wilson, John L., ... 439 Northampton Street, Easton, Pa.
†Winters, C. R., ... Rolla, Phelps Co., Mo.
*Witherbee, Frank S., ... Port Henry, Essex Co., N. Y.
†Witherbee, S. H., ... 228 Madison Avenue, New York City.
*Witherbee, T. F., ... Port Henry, Essex Co., N. Y.

*Witherow, J. P., ... 178 Wood Street, Pittsburgh, Pa.
*Womelsdorf, A. J., ... Pottsville, Pa.
*Wood, Henry, ... Streator, La Salle Co., Ill.
*Woodward, Richard W., ... Ouray, Colorado.
†Woolson, O. C., ... Chicopee, Mass.
†Wright, Harrison, ... Wilkes-Barre, Pa.
*Wrigley, Henry E., ... Titusville, Pa.
*Wurtz, Prof. Henry, ... 12 Hudson Terrace, Hoboken, N. J.

*Young, Chas. A., ... 536 North Fourth Street, Philadelphia.

Honorary Members, 5; Members, 543; Associates, 134; Foreign Members, 52.

Deceased.

Blossom, T. M.,	1876
Brown, A. J.,	1875
Clemes, J. P.,	1876
Daddow, S. H.,	1875
D'Aligny, H. F. Q.,	1875
Dresser, Charles A.,	1878
Firmstone, William,	1877
Gould, Robert H.,	1878
Harris, Stephen,	1874
Hunt, Thomas,	1872
Jenney, F. B.,	1876
Lee, Col. Washington,	1872
Liebenau, Charles von,	1875
Lord, John C.,	1872
Moore, Charles W.,	1877
Newton, Henry,	1877
Painter, Howard,	1876
Phelps, Walter,	1878
Richter, C. E.,	1877
Schirmer, J. F. L.,	1877
Steitz, Augustus,	1876
Stoelting, Hermann,	1875
Walz, Isidor,	1877
Witherbee, J. G.,	1875

RULES.

ADOPTED MAY, 1873. AMENDED MAY, 1875, MAY, 1877, AND MAY, 1878.

I.

OBJECTS.

The objects of the AMERICAN INSTITUTE OF MINING ENGINEERS are to promote the Arts and Sciences connected with the economical production of the useful minerals and metals, and the welfare of those employed in these industries, by means of meetings for social intercourse, and the reading and discussion of professional papers, and to circulate, by means of publications among its members and associates, the information thus obtained.

II.

MEMBERSHIP.

The Institute shall consist of Members, Honorary Members, and Associates. Members and Honorary Members shall be professional mining engineers, geologists, metallurgists, or chemists, or persons practically engaged in mining, metallurgy, or metallurgical engineering. Associates shall include all suitable persons desirous of being connected with the Institute and duly elected as hereinafter provided. Each person desirous of becoming a member or associate shall be proposed by at least three members or associates, approved by the Council, and elected by ballot at a regular meeting upon receiving three-fourths of the votes cast, and shall become a member or associate on the payment of his first dues. Each person proposed as an honorary member shall be recommended by at least ten members or associates, approved by the Council and elected by ballot at a regular meeting on receiving nine-tenths of the votes cast; *Provided*, that the number of honorary members shall not exceed twenty. The Council may at any time change the classification of a person elected as associate, so as to make him a member, or *vice versâ*, subject to the approval of the Institute. All members and associates shall be equally entitled to the privileges of membership; *Provided*, that honorary members, and members and associates permanently residing in foreign countries, shall not be entitled to vote or to be members of the Council.

Any member or associate may be stricken from the list on recommendation of the Council, by the vote of three-fourths of the members and associates present at any annual meeting, due notice having been mailed in writing by the Secretary to the said member or associate.

III.

DUES.

The dues of members and associates shall be ten dollars per annum, payable in advance at the annual meeting; *Provided*, that persons elected at the meeting following the annual meeting shall pay eight dollars, and persons elected at the meeting preceding the annual meeting shall pay four dollars as dues for the current year; and members and associates permanently residing in foreign countries, excepting Canada, shall be liable to such annual or other payments only as the Council may impose, to cover the cost of supplying them with publications. Honorary members shall not be liable to dues. Any member or associate may become, by the payment of one hundred dollars at any one time, a life member or associate, and shall not be liable thereafter to annual dues. Any member or associate in arrears may at the discretion of the Council be deprived of the receipt of publications, or stricken from the list of members when in arrears for one year; *Provided*, that he may be restored to membership by the Council on payment of all arrears, or by re-election after an interval of three years.

IV.

OFFICERS.

The affairs of the Institute shall be managed by a Council, consisting of a President, six Vice-Presidents, nine Managers, a Secretary and a Treasurer, who shall be elected from among the members and associates of the Institute at the annual meetings, to hold office as follows:

The President, the Secretary, and the Treasurer for one year (and no person shall be eligible for immediate re-election as President who shall have held that office subsequent to the adoption of these rules, for two consecutive years), the Vice-Presidents for two years, and the Managers for three years; and no Vice-President or Manager shall be eligible for immediate re-election to the same office at the expiration of the term for which he was elected. At each annual meeting a President, three Vice-Presidents, three Managers, a Secretary and a Treasurer shall be elected, and the term of office shall continue until the adjournment of the meeting at which their successors are elected.

The duties of all officers shall be such as usually pertain to their offices, or may be delegated to them by the Council or the Institute; and the Council may in its discretion require bonds to be given by the Treasurer. At each annual meeting the Council shall make a report of proceedings to the Institute together with a financial statement.

Vacancies in the Council may occur by death or resignation; or the Council may by vote of a majority of all its members declare the place of any officer vacant, on his failure for one year, from inability or otherwise, to attend the

Council meetings or perform the duties of his office. All vacancies shall be filled by the appointment of the Council, and any person so appointed shall hold office for the remainder of the term for which his predecessor was elected or appointed; *Provided*, that the said appointment shall not render him ineligible at the next annual meeting.

Five members of the Council shall constitute a quorum; but the Council may appoint an Executive Committee, or business may be transacted at a regularly called meeting of the Council, at which less than a quorum is present, subject to the approval of a majority of the Council, subsequently given in writing to the Secretary, and recorded by him with the minutes.

V.

ELECTIONS.

The annual election shall be conducted as follows: Nominations may be sent in writing to the Secretary, accompanied with the names of the proposers, at any time not less than thirty days before the annual meeting; and the Secretary shall, not less than two weeks before the said meeting, mail to every member or associate (except honorary members, or foreign members or associates), a list of all the nominations for each office so received, stamped with the seal of the Institute, together with a copy of this rule, and the names of the persons ineligible for election to each office. And each member or associate, qualified to vote, may vote, either by striking from or adding to the names of the said list, leaving names not exceeding in number the officers to be elected, or by preparing a new list, signing said altered or prepared ballot with his name, and either mailing it to the Secretary, or presenting it in person at the annual meeting: *Provided*, that no member or associate, in arrears since the last annual meeting, shall be allowed to vote until the said arrears shall have been paid. The ballots shall be received and examined by three Scrutineers, appointed at the annual meeting by the presiding officer; and the persons who shall have received the greatest number of votes for the several offices, shall be declared elected, and the Scrutineers shall so report to the presiding officer. The ballots shall be destroyed, and a list of the elected officers, certified by the Scrutineers, shall be preserved by the Secretary.

VI.

MEETINGS.

The annual meeting of the Institute shall take place on the third Tuesday of February, at which a report of the proceedings of the Institute, and an abstract of the accounts, shall be furnished by the Council. Two other regular meetings of the Institute, shall be held in each year, at such times and places as the Council shall select. Special meetings may be called whenever the Council sees fit; and the Secretary shall call a special meeting on a requisition signed by fifteen or more members. The notices for special meetings shall state the business to be transacted, and no other shall be entertained. All notices may be given by circular, mailed to members and associates, or through the Bulletin, published in the regular organ of the Institute, at the discretion of the Council

Every question which shall come before any meeting of the Institute, shall be decided, unless otherwise provided by these Rules, by the votes of the majority of the members then present. The place of meeting shall be fixed in advance by the Institute, or, in default of such determination, by the Council, and notice of all meetings shall be given by mail, or otherwise, to all members and associates, at least twenty days in advance. Any member or associate may introduce a stranger to any meeting; but the latter shall not take part in the proceedings without the consent of the meeting.

VII.

PAPERS.

The Council shall have power to decide on the propriety of communicating to the Institute any papers which may be received, and they shall be at liberty, when they think it desirable, to direct that any paper read before the Institute, shall be printed in the Transactions. Intimation, when practicable, shall be given at each General Meeting, of the subject of the paper or papers to be read, and of the questions for discussion at the next meeting. The reading of papers shall not be delayed beyond such hour as the presiding officer shall think proper; and the election of members or other business may be adjourned by the presiding officer, to permit the reading and discussion of papers.

The copyright of all papers communicated to, and accepted by the Institute, shall be vested in it, unless otherwise agreed between the Council and the author. The author of each paper read before the Institute shall be entitled to twelve copies, if printed, for his own use, and shall have the right to order any number of copies at the cost of paper and printing, provided said copies are not intended for sale. The Institute is not, as a body, responsible for the statements of fact or opinion, advanced in papers or discussions, at its meetings, and it is understood that papers and discussions should not include matters relating to politics or purely to trade.

VIII.

AMENDMENTS.

These Rules may be amended, at any annual meeting, by a two-thirds vote of the members present, provided that written notice of the proposed amendment shall have been given at a previous meeting.

ERRATA.

Page 35, foot note * before page 488, insert Vol. I.
Page 41, foot note *, for breaks, read breasts.
Page 46, line 18, for 4 x 6, read 4 x 4.
Page 49, foot note †, for 2.230, read 2230.
Page 54, line 6 from bottom, for 59, read 59½.
Page 55, column 6 of table opposite No. 3, should read Upper box, each side, blocks. 2d, blocks. 3d, riffles. †
Page 59, line 14 from bottom, for .2624, read .02624.
Page 59, line 5 from bottom, for .2499, read .02499.
Page 95, column of remarks, the first and second should be moved down one line.
Table IV, following page 100, column 25. for $0.104, read $.0104.
Table V, column 17, third item, for 1329.27, read 1,339.27.
Table VI, last column, fourth item, for 6,153.02, read 6.153.62.
Table VII, last column, first item, for $2,033.50, read $2,033.56.
Table X, column 2, for 5,663.80, read 5,663.89.
Table X, column 2, for 4.201.89, read 4,201.95.
Table X, column 2, for 53,088.82, read 53,088.85.
Table X, column 4, for $0,0203, read $0,0283.

PROCEEDINGS OF MEETINGS.

MAY, 1877, TO FEBRUARY, 1878.

ANNUAL MEETING, WILKES-BARRE,

May, 1877.

THE Institute assembled in the Court-House, on Tuesday evening, May 22d, and was called to order by Vice-President E. B. Coxe. After announcement by the Local Committee of the programme for excursions, the Secretary read the following annual report of the Council:

The Council, in presenting to the Institute its annual report, has to record a most eventful year in the history of the Institute. Three meetings, as usual, have been held, two in Philadelphia and one in New York. At the Philadelphia meetings in June and October, there were present many distinguished foreign engineers, some of whom contributed communications to the Institute, and took part in its discussions. Sixty-seven papers have, in all, been presented to the Institute, which will be published in the fifth volume of Transactions.

There has been an accession to the membership of 1 honorary member, 11 foreign members, and 162 members and associates; 8 have resigned, 6 have died, and 30 have been dropped from the roll, after due notification, for non-payment of dues. The membership now comprises 5 honorary members, 50 foreign members, and 644 members and associates, in all 699.

As worthy of especial mention in the work of the year are the Discussions on Technical Education in connection with the American Society of Civil Engineers, and the report of the International Committee appointed by the Institute to consider the nomenclature of iron and steel. The Discussions on Technical Education have been published in a separate volume, and comprise a valuable and suggestive collection of the views of practical engineers and educators.

The report of the International Committee, composed of Messrs. Akerman, of Sweden; Bell, of England; Tunner, of Austria; Gruner, of France; Wedding, of Prussia; and Holley and Egleston, of the United States, has received the careful attention of engineers and metallurgists of all countries, and has met with very general acceptance.

Of the work of the Centennial Committee in Philadelphia the members are generally familiar, from personal experience, and from the detailed report of the committee at the last meeting of the Institute. But the record of the service rendered by this committee would be incomplete without mention of the numerous letters of thanks and formal expressions of obligations received by the Institute from individuals, societies, and governments abroad. The wise and generous spirit in which the work of the committee was planned, and the laborious and self-sacrificing manner in which it was carried out, call for emphatic expressions of thanks from the Institute.

The gifts of Centennial exhibits to the Institute, largely as testimonials for services rendered, has necessitated the appointment of a Museum Committee for

the reception and installation of the collections. This committee has already made a report of progress at the last meeting.

The following members have died during the past year: T. A. Blossom, J. P. Clemes, F. B. Jenney, C. E. Richter, and our distinguished foreign member, David Forbes.

The accounts of the Secretary and Treasurer, duly audited, show receipts for the year of $5852.51, with a balance from the preceding year of $1428.24, a total of $7280.75. The expenses have been $6577.89, leaving a balance of $702.86. The balances for this and previous years do not represent surplus over expenditures. It has hitherto been the practice to balance the accounts as near as possible to the time of the annual meeting, at which time a considerable part of the dues for the succeeding year have been paid in. During the past year the expenditures have exceeded the receipts for the same period by about $600. Measures have been taken by the Council by which it is expected that the receipts for the coming year will meet the expenses of the year and also cover the deficit of the past year.

Meeting in this place, where six years ago the American Institute of Mining Engineers was organized, we cannot fail to be impressed with the almost unprecedented growth of the Society. From a small gathering of twenty-two at the first meeting we have grown to a membership of nearly 700, and to a recognized position among the scientific societies of the world.

The Council, in the absence of our President, submits to the Institute the following letter:

"NEW YORK, May 21st, 1877.

"MY DEAR SIR: When the Institute did me the honor to elect me as its President, I was careful to have it understood that my public duties would almost certainly prevent me from being present at the meetings and discharging the duties of the position in the manner so acceptably performed by my predecessors. But I did expect to be able to attend the spring meeting, and show by my presence the deep and abiding interest which I take in all that concerns the advancement of the metallurgical arts in this country. It is with extreme regret, almost allied to despair, that I find myself powerless to execute my purpose. Ever since the adjournment of Congress I have been ill, and unable to leave home even for the few days which I had promised to my Southern friends on a visit for which I had made every provision. I am now gaining in strength, but am under treatment for a disorder of the throat which makes my daily presence here indispensable. I pray you, therefore, to make my excuses to your associates, and to assure my fellow-members of the regret with which I am constrained to deprive myself of the pleasure of being among gentlemen who thought me worthy of the high honor which I have done so little to deserve, and which I now lay down with satisfaction only because I am conscious of my inability to perform the duties of the position.

"I have the honor to be, with great respect, your obedient servant,

"ABRAM S. HEWITT.

"DR. THOMAS M. DROWN, Secretary."

The Council desires to express in this connection, on behalf of the Institute, and, it is confident, with the cordial concurrence of every member, the sincere regret of all that Mr. Hewitt's health and public duties have deprived us of so much of his presence as we had hoped to enjoy, and the assurance that his earnest sympathy and honored name have been important aids to the Institute during a critical portion of its career—the period when this society stepped forward into international recognition and extended usefulness.

The presiding officer appointed Messrs. E. B. Harden and William Wier McKee Scrutineers, to receive the ballots and to report the result of the election at a subsequent session.

The following papers were then read:

On a Mining Laboratory, by Prof. R. H. Richards, of the Massachusetts Institute of Technology, Boston.

On the Rothschoenberger Stollen, in Saxony, by Dr. R. W. Raymond, of New York.

Note on the Manufacture of Ferro-manganese in the Blast Furnace, by F. Valton, of Paris, France.

On Wednesday morning, the members left by special train on the Lehigh and Susquehanna Division of the Central Railroad of New Jersey, and first visited the shops of the railroad company at Ashley, under the courteous guidance of Mr. L. C. Braistow, Master Mechanic. The company's planes were next visited, where opportunity was offered of inspecting the machinery, and also of ascending the three planes to the summit in an open car. The remainder of the day was spent at the charming retreat of General Paul A. Oliver, at Laurel Run, where the members had the privilege of examining General Oliver's process for the manufacture of gunpowder, and of enjoying his genial hospitality.

In the evening the second session was held, and the following papers read:

Can we transmit Power in large amount by Electricity? by N. S. Keith, of Newark, N. J.

Note on the Cost of Construction of six Regenerative Furnaces built in 1875 at the Edgar Thomson Steel Works, by P. Barnes, of New York.

Some Peculiarities in the Composition of Irons, by Dr. J. Lawrence Smith, of Louisville, Ky.

On Fire-brick Stoves, by J. M. Hartman, of Philadelphia.

Mr. J. D. Weeks, of Pittsburgh, on behalf of the committee appointed, in accordance with a resolution passed at the last meeting,* to examine into the subject of gauges, said that the work involved had proved to be more extensive and intricate than had been anticipated. The committee, however, was working industriously, and hoped to report at the next meeting.

Thursday was devoted to visits to the mines and breakers in the neighborhood of Wilkes-Barre.

* This committee, appointed by the chairman (Dr. Raymond) after the adjournment of the meeting, consists of Messrs. Egleston, Weeks, and Metcalf.

The Prospect Shaft of the Lehigh Valley Company was first visited, under the guidance of Mr. Frederick Mercur, the engineer of the company, Superintendent Mitchell, of the Lehigh Valley Railroad, supplying a special train for the party. After inspecting the direct-acting hoisting engines, a portion of the company descended the shaft in cages, and penetrated some distance into the workings, observing the unusually complete precautions which are taken in this mine against fire-damp and fire. The Prospect Shaft has the reputation of being, with respect to generation of fire-damp, the worst in the world, generating several thousand cubic feet of light carburetted hydrogen gas per minute. It is connected with another shaft at Oakwood, and each of these has a Guibal fan—the former being 20 feet and the latter 30 feet in diameter. Inspector Williams, on a recent test, found the Prospect fan, at sixty revolutions, to be exhausting 57,000 cubic feet of air per minute, while the Oakwood fan, at thirty-five revolutions, was exhausting 73,000 feet. This aggregate of 130,000 cubic feet of air per minute was required to prevent the accumulation of fire-damp in dangerous quantities. But sudden outbursts of the gas frequently take place nevertheless, and give rise to serious fires. To suppress these, pipes are carried through the mine, supplied with water from the surface, there being little water in the mine; and Babcock fire-extinguishers are also used. One of the excursion parties on this occasion had opportunity to see how quickly, by these means, a sudden fire was extinguished. The Prospect Shaft is 600 feet deep, and the Oakwood Shaft 750 feet. The workings extend under the Susquehanna, and although there is little water in the mines there is a considerable escape of gas at one point through the river itself.

The Empire Mine, of the Lehigh and Wilkes-Barre Company, was next visited, but not entered. Here Mr. Charles Parrish exhibited to the members many interesting drawings illustrating the mechanical arrangements for hoisting, handling, and shipping coal. To Mr. Parrish the Institute is also indebted for a collation, served on the train.

The exposure of coal on the surface in the open cut and tunnel of the Wanamie Colliery was next visited, after which the excursion was continued to Nanticoke and to the great "No. 7" breaker of the Lehigh and Wilkes-Barre Company, after inspecting which the party returned to Wilkes-barre.

The third and concluding session was held on Thursday evening.

The Secretary read the report of the Scrutineers of the election, which declared the following persons elected:

President.—Dr T. Sterry Hunt, Boston.

Vice-Presidents.—Thomas Egleston, New York; John B. Pearse, Boston; William P. Shinn, Pittsburgh.

Managers.—E. T. Cox, Indianapolis; H. S. Drinker, Philadelphia; A. L. Holley, New York.

Treasurer.—Theodore D. Rand, Philadelphia.

Secretary.—Thomas M. Drown, Easton, Pa.

The following persons, recommended by the Council for members and associates of the Institute, were unanimously elected:

MEMBERS.

Bennett, Clarence M.,	Jenkintown, Montgomery County, Pa.
Bowser, Prof. Edward A.,	Rutgers College, New Brunswick, N. J.
Campbell, Charles,	Ironton, Ohio.
Cook, Edgar S.,	Monocacy, Berks County, Pa.
Davenport, Russell W.,	Midvale Steel Works, Philadelphia.
Dudgeon, William,	Londonderry, Nova Scotia.
Ellers, George Howard,	Paterson, N. J.
Gill, George W.,	Columbus, Ohio.
Gogin, Frank S.,	Norway Iron Works, Boston.
Gogin, George W.,	Norway Iron Works, Boston.
Horton, Nathan Waller,	New York City.
Marchand, C. E.,	Alliance, Ohio.
Pickands, Harry S.,	Ogden Iron Company, Nelsonville, Ohio.
Ramsay, William Taylor,	Avery, Monroe County, Iowa.
Riezler, Otto,	Drifton, Jeddo P. O., Luzerne County, Pa.
Rousseau, J. C.,	Mount Vernon Iron Works, Augusta Co., Va.
Sheet, Ogden,	Quinnimont, West Va.
Smith, Hamilton, Jr.,	San Francisco, Cal.
Steiger, John,	Drifton, Jeddo P. O., Luzerne County, Pa.
Taylor, Charles L.,	Philadelphia.
Wilhelm, A.,	Cornwall, Lebanon County, Pa.

FOREIGN MEMBER.

Allport, Charles J.,	Sheffield, England.

ASSOCIATES.

Bliss, Arthur W.,	Dunbar, Fayette County, Pa.
Fernow, Bernard,	Brooklyn, N. Y.
Freeman, Wm. Coleman,	Cornwall, Lebanon County, Pa.
Hart, William R.,	Philadelphia.
Hartranft, S. S.,	Lafayette College, Easton, Pa.
Hollis, William,	School of Mines, Columbia College, New York.
McMillin, Emerson,	Ironton, Ohio.

McNulty, Joseph,	School of Mines, Columbia College, New York.
Morris, Gouverneur Wm.,	School of Mines, Columbia College, New York.
Prosser, Walter,	School of Mines, Columbia College, New York.
Rickard, R. H.,	New York City.
Roney, C. Henry,	Philadelphia.
Shoenbar, John,	Eureka, Nevada.
Stanton, John, Jr.,	New York City.
Tuttle, Horace A.,	Cleveland, Ohio.

The proposed amendments to the Rules, of which notice was given at the February meeting, were next discussed.

The amendment to Rule II, proposed by Mr. Frank Firmstone, with reference to the method of election of members, was laid over till the next annual meeting. The amendment proposed by the same to Rule V, to insert *three* scrutineers instead of *two* scrutineers, was adopted. Of the amendments proposed by Prof. Prime, the first, relating to honorary members in Rule II, was laid on the table; the second, taking out reference in Rule II to members permanently residing in foreign countries, was laid on the table; the third, referring to foreign membership in Rule III, was laid on the table; the fourth, striking out the passage in Rule IV with reference to the classification of the members of the Council, was adopted; the fifth, referring to vacancies in the Council in Rule IV, was indefinitely postponed.

Mr. E. B. Coxe's proposed amendment to Rule IV, referring to the number of vice-presidents and managers, was withdrawn.

Mr. Drown's proposed amendment to Rule V, to substitute *four* for *two* weeks, was not adopted.

The amendment proposed by Prof. Frazer to Rule V, referring to the order of the names on the ballots, was inadvertently omitted.

The chairman, Mr. E. C. Pechin, announced on behalf of the Council that the contract existing between the Institute and *Engineering and Mining Journal* had expired by limitation.

Dr. R. W. Raymond, on the part of the *Engineering and Mining Journal*, said the proprietors would decline to renew the arrangement for publishing the papers of the Institute, unless it was voted desirable in open meeting of the Institute. After prolonged discussion, the following resolution was adopted: That the arrangement at present existing between the Institute and the *Journal* be continued, revokable by either party at three months' notice.

The chairman announced that negotiations were in progress to arrange a meeting of the Institute on Lake Superior some time in

the near future. In view of these negotiations it was voted that the Council be authorized to antedate the October meeting if desirable.

General J. T. Wilder presented an invitation from the Iron, Coal, and Manufacturers' Association, of Chattanooga, Tennessee, to the Institute, to hold one of its future meetings there.

The following resolution was unanimously adopted:

Resolved, That the hearty thanks of the Institute are hereby tendered to Mr. L. C. Bristow, General Paul A. Oliver, Mr. Charles Parrish, Judge Rhone, the officers of the Lehigh and Susquehanna and the Lehigh Valley Railroads, and the local committee, Messrs. Stearns, Mercur, and Wright, for the thoughtful and generous reception of the Institute in Wilkes-Barre, and for the many courtesies which have contributed so largely to the pleasure and profit of the members during the meeting.

Prof. Persifor Frazer, Jr., showed some small cards on which he had had printed in tabular form the conversion of inches into centimeters, feet into meters, yards into meters, and miles into kilometers, as a contribution to the effort being made to familiarize the public with the metric system, and to facilitate calculations. The cards were distributed to the members.

Prof. Frazer then read a paper on the Classification of Coals.

Dr. R. W. Raymond exhibited a specimen of the silver-bearing sandstone of Utah.

The following papers were then read by title:

The Cost of a Blast Furnace Plant in the Cleveland District of England, by P. Barnes, of New York.

The Cost of Iron Rails at one of the leading Mills in England, by P. Barnes, of New York.

On the Southern Limit of the last Glacial Drift across New Jersey and the adjacent parts of New York and Pennsylvania, by Prof. G. H. Cook, State Geologist of New Jersey.

Hydraulic Mining in California, by A. J. Bowie, Jr., of San Francisco.

Notes on the Manufacture of Iron in Mexico, by J. P. Carson, of New York.

The Action of Small Spheres of Solids in Ascending Currents of Fluids and in Fluids at Rest, by J. C. Bartlett, of Cambridge, Mass.

The Mechanical Work performed in Heating the Blast, by Prof. B. W. Frazier, of Bethlehem, Pa.

The meeting was then declared adjourned.

AMENIA, N. Y., MEETING,

October, 1877.

THE opening session was held on Tuesday evening, October 23d.

Mr. J. F. Lewis, on behalf of the local committee of arrangements, made a short address of greeting to the members assembled, and then introduced Gov. A. H. Holley, of Lakeville, Conn. Gov. Holley addressed the Institute as follows:

Gentlemen, we give you cordial welcome to a mining, manufacturing, and agricultural country, of which we are not a little proud. We welcome you as an association, and as individuals. We invite you to an inspection of our resources, and to our methods of improving them. We appreciate the results of your efforts in past years, and we anticipate good from your advice and counsel in the future. You are in the vicinity of some of the oldest mining and manufacturing operations in iron in our country. It will be our pleasure to conduct you to a mine which was worked for more than a half century before our country achieved national independence, and to point out to you the spot where the products of this mine were wrought into cannon and shot during the progress of our Revolution. We can show you also a far larger area of mining country than was supposed to exist in this vicinity at that early day. There are, within a radius of thirty miles from this spot, ten mines at least that have been extensively worked, and there are as many more that have been occasionally worked, with a fair degree of success. All the mines that are wrought to any extent produce excellent qualities of iron, while many of them in various combinations produce as good material for the manufacture of steel, car wheels, axles, and many other purposes, as can be found in any country. The old Salisbury iron retains its reputation for tensile strength unsurpassed, when made entirely from the ore of the old mine.

The progress that has been made in the development of these mines since the days of the pickaxe, when the product was transported in pounds upon horseback, to those of the steam-engine, which now moves hundreds of tons per day, presents, indeed, a

strong contrast. In these improvements we have kept reasonable pace with the age, although we do not doubt that your intelligent association can suggest greater advances in mining, which will result to our advantage.

The first blast furnace erected in Salisbury was located in Lakeville, and was put in blast in 1763 or 1764. It was unquestionably the first one built in the State. In 1762, the site which it occupied was conveyed to Ethan Allen, of Revolutionary memory, and two other proprietors, who erected the furnace, and soon after sold it to the Caldwells, of Hartford, Connecticut. During our Revolutionary war the furnace was in the possession of Mr. Richard Smith, an English gentleman, who left it, and returned to his native country. The State of Connecticut, without confiscating the property, operated it for the manufacture of cannon and shot during the war. It was afterwards possessed by various other individuals until about the year 1814, when it became the property of Messrs. Holley & Coffing, who operated it for more than twenty years, and more successfully than any previous owners had done.

Subsequently, and at a considerably later period, five other furnaces were built in Salisbury, two of which are now in blast, I believe, and the others have been demolished. Of the twenty-seven furnaces which I now recall as having been built and operated within a radius of thirty miles of this village, exclusive of those on the Hudson River, one-half are either in operation, or in a condition to be put in operation at short notice, whenever the demand for iron will warrant their use.

For many years after the construction of these furnaces, one-half of them, at least, did not produce more than three tons of iron per day, and this was considered a fair product and quite satisfactory working. At present, and for some years past, furnaces of similar size and construction are made to produce from eight to twelve tons per day.

Among those that are thus productive are the Messrs. Gridley, Messrs. Miles, Mr. Maltby, and the Irondale Company, all in this Valley and State; the Lime Rock Iron Company and the Messrs. Landon, in Salisbury; the Canaan Iron Company, in South Canaan; the Barnum-Richardson Company's three furnaces in North Canaan, and one in Sharon, all in Connecticut; and the Richmond Iron Company's furnaces in Van Deuzenville and Richmond, in Berkshire County, Massachusetts; making eleven furnaces in all.

The first *forge* constructed for making wrought iron was erected,

about the year 1734, at Lime Rock. The iron was produced directly from the ore in small fires capable of yielding from 500 to 700 lbs. per day. This process was continued for some years, but was abandoned soon after pig iron came into the market, which was substituted for the ore in the forges, and forge fires were then multiplied to the number of thirty to forty within a radius of five or six miles of the Old Bed. These forges produced for many years large quantities of merchant bars, anchors, cotton screws, locomotive cranks and axles, besides furnishing large supplies of musket iron for the Government armories at Springfield and Harper's Ferry, and also for private armories.

The mines to which I have referred have furnished the ore not only for the furnaces above mentioned, but large quantities have been sent from several of them to Manhattan, Fishkill, Poughkeepsie, Hudson, Albany, and Troy; and they are capable of yielding large supplies to meet increased demand.

Mr. President, I am trespassing upon the forbearance of your association, and will only add that facilities will be furnished you, by our friends and our liberal railroad companies, for visiting many of these works and mines, where you will make personal examinations that will be more satisfactory than any description which I can give. We renew a cordial welcome, anticipating pleasure from your visit, and trust that it may be made agreeable to yourselves and of benefit to all parties.

Doctor T. Sterry Hunt, President of the Institute, after responding to the cordial welcome of Governor Holley, spoke at some length of the geological and geographical features of Eastern North America, adapting his remarks to the large general audience present.

Professor T. Egleston, Chairman of the Committee on Gauges, then read the report of the committee.

The following papers were then read:

On Fluxing Silicious Ores, and On a New Method of taking Blast Furnace Sections, by T. F. Witherbee, of Port Henry, N. Y.

Notes on the Salisbury (Conn.) Iron Mines and Works, by A. L. Holley, of New York City.

The second session was held on Wednesday afternoon, when the following papers were read:

Methods of Mining on Lake Superior, by Professor T. Egleston, School of Mines, New York City.

Tellurium Minerals of Colorado, by E. P. Jennings, of Cornell University, Ithaca, N. Y.

Description of a Form of Water-tube Boiler, by P. Barnes, of New York City.

Notes on the Iron Ores and Anthracite Coal of Rhode Island, by A. L. Holley, of New York City.

On a Graphic Method of keeping Blast Furnace Results, by Wm. Kent, of Pittsburgh, Pa.

On the so-called Buckshot Iron, by F. P. Dewey, of Dover, N. J.

The third session was held on Wednesday evening.

The President presented, on behalf of the Council, the following resolution for adoption:

Resolved, That the Museum Committee shall be empowered to make such disposition and instalment of the mineral and metallurgical collections of the Institute as will, in its judgment, be best for the Institute, and for the preservation of the collections, provided that no expenditure of the funds of the Institute be incurred.

The resolution was unanimously adopted.

The President communicated to the Institute the following action of the Council:

Resolved, That a committee of three be appointed to consider and recommend amendments to the rules of the Institute, if any change therein is deemed advisable, relating,

1st. To the number and times of the general meetings of the Institute to be held in each year.

2d. To the arrangement of the order of reading, discussion, and publication of papers presented to the Institute, and of the exercises at the general meetings thereof.

The Committee shall report to the Council at the February meeting, so that notice of such amendments as the Council may approve may be given to the Institute at that time, in order that definite action thereon may be had at the annual meeting, May, 1878.

The President mentioned that it was the wish of the Council that members and associates would send to the Secretary their views on the subjects embodied in the resolution.

The following papers were then read:

On an Edgestone for grinding Analytical Samples: and, On a Jet Pump as a Filter Pump and a Blower, by Prof. R. H. Richards, of Boston, Mass.

The Eureka Lode, of Eureka, Eastern Nevada, by W. S. Keyes, of San Francisco, Cal.

The Eureka-Richmond Case, by Dr. R. W. Raymond, of New York City.

The Ore Deposits in the Vicinity of Eureka, Nevada, by Prof. W. P. Blake, of New Haven, Conn.

The fourth and concluding session was held on Thursday evening.

The following persons, duly proposed and approved by the Council, were elected members and associates of the Institute:

MEMBERS.

Agassiz, Prof. Alexander,	Cambridge, Mass.
Barron, Samuel A.,	Cheltenham, Mo.
Clark, Henry G.,	New Brighton, Staten Island, N. Y.
Everts, Charles,	Ore Hill, Litchfield Co., Conn.
Gibson, Victor R.,	St. Louis, Mo.
Grenier, Dr. Ernest,	School of Mines, Golden City, Colorado.
Gridley, Edward,	Wassaic, Dutchess Co., N. Y.
Hughes, David T.,	Nevada City, California.
King, Henry,	Allegheny City, Pa.
Meister, Herman,	Washington University, St. Louis, Mo.
Miles, Fred. P.,	Copake Iron Works, Columbia Co., N. Y.
Miles, William,	Copake Iron Works, Columbia Co., N. Y.
Myers, Santiago L.,	New York City.
Murphy, John G.,	Orinoco Exploring and Mining Co., Phila.
Neu, Gustave S.,	New York City.
Nichols, Ralph,	Nyack, N. Y.
Phelps, Walter,	Irondale, Dutchess Co., N. Y.
Trowbridge, Prof Wm. P.,	School of Mines, New York City.

ASSOCIATES.

Brinkerhoff, George C.,	School of Mines, New York City.
Nambu, Kingo,	School of Mines, New York City.

On recommendation of the Council, Mr. Robert W. Hall was changed from associate to member.

The following resolutions, adopted by the Council, were then communicated to the Institute:

WHEREAS, On May 28th, 1877, the Scientific Publishing Company gave notice of its desire to discontinue the existing arrangement regarding the publication of the papers of the Institute.

Resolved, That the Institute gratefully acknowledges the important aid and service of its publication, the *Engineering and Mining Journal*, both within and beyond the terms of the contract.

Resolved, That the Institute accepts the notice of the Scientific Publishing Company, to take effect December 31st, 1877.

Resolved, That the Institute will not enter, at present, into an arrangement with any technical newspaper regarding publication.

Resolved, That the Secretary is hereby authorized to print the papers accepted by the Council for distribution to members, exchanges, and otherwise as authorized by the Committee on Publications, the said papers to be issued in pamphlet form, bearing the words "subject to revision," and that after such time for revision shall have elapsed as the Committee on Publications may prescribe, the papers shall be published in the Transactions.

The following papers were then read:

The Electrolytic Deposition of Copper, by N. S. Keith, of New York City.

The Goderich Salt Deposit, by Oswald J. Heinrich, of Goderich, Canada.

The Missing Ores of Iron, by Prof. P. Frazer, Jr., of Philadelphia.

What is a Pipe Vein? by Dr. R. W. Raymond, of New York City.

The following papers were read by title:

The New Dressing Works at Clausthal, by J. C. Randolph, of New York City.

The Cost of Boilers erected at the Edgar Thomson Steel Works during the years 1873, 1874, 1875, by P. Barnes, of Plainfield, N. J.

Results of Analyses of Blast Furnace Gases, by C. A. Colton, School of Mines, New York City.

The Stone Hill Copper Mine, Alabama, by R. P. Rothwell, of New York City.

On Accurate Measurements of Base Lines for Triangulation with Steel Tapes, by Prof. H. S. Munroe, School of Mines, New York City.

The following resolution of thanks was then passed:

RESOLVED, That the thanks of the Institute are hereby presented to the following gentlemen and companies for the cordial reception which they extended to the Institute, and for the excursions which they have provided:

First, and most heartily, to Mr. J. F. Lewis, who has conducted with rare ability the arrangements and excursions of the meeting, through mines and works, and over railroads occupying a large territory, and has thereby contributed most largely to the success, profit, and pleasure of the meeting.

Also, to the citizens of Amenia for their kind reception and entertainment; to the Manhattan Iron Company, represented by Mr. J. F. Lewis; to Messrs. N. Gridley & Son, proprietors of the Gridley Mine and Wassaic Furnace, and to their mining superintendent, Mr. John M. Haskins; to the Borden Condensed Milk Company, represented by Mr. Noah Bishop and Mr. Miles K. Lewis, for their very acceptable entertainment; to Gen. Walter Phelps, manager of the Irondale Furnace of the Millerton Iron Company; to Mr. Frederick Miles, proprietor of the Copake Iron Works, for his cordial reception at his works, also for transportation to Mount Washington and hospitable entertainment there; to Mr. George Williams, lessee of the Weed Ore Bed; to Mr. C. S.

Maltby, proprietor of the Phœnix Furnace; to Mr. P. B. Everts, President of the Old Hill Mine, at Ore Hill; to the Iron Mining Companies of the Salisbury District; to the Barnum-Richardson Company, and its superintendents and managers, Mr. Rutledge Wilbur at the Amenia Mine, Col. Harlow P. Harris at the Chatfield Mine, and Mr. N. C. Ward at the East Canaan Furnace; to Gov. A. H. Holley, for his valuable historical address and for his most pleasant reception at his residence; to Messrs. Coffing, Robbins, Burget, and Kniffen, representing the Berkshire County Iron Works, in Massachusetts; to the Richmond Iron Company, for the interesting exhibits of its works and agreeable entertainment; to the New York and Harlem, the Connecticut Western, and the Housatonic Railroad Companies, for excursion trains; and to the Boston and Albany Railroad Company, for permission to pass over its road.

The Meeting was then declared adjourned.

EXCURSIONS.

The excursions projected by the local committee, in which it had the hearty co-operation of the proprietors and managers of the mines and works, were admirably arranged and successfully carried out. The following is a concise list of the places visited:

Wednesday morning.—The Manhattan Mine, under the management of Mr. J. F. Lewis, was first inspected, conveyance by carriage being provided. The members were next taken to the Gail Borden Condensed Milk Works, at Wassaic, where they were received by Mr. Noah Bishop and Mr. Miles K. Lewis. After inspection of the process, the party was refreshed by a luncheon provided by the company. The Wassaic Furnace was then visited, under the guidance of Mr. N. H. Gridley and Mr. Ed. Gridley. After returning to Amenia, the mines in the immediate vicinity were visited, —the Gridley Mine and the Amenia Mine, the former under the superintendence of Mr. John M. Haskins, and the latter of Mr. Rutledge Wilbur.

On Thursday morning, the party left Amenia on special train on the Harlem Railroad, stopping first at Irondale, to visit the furnace of the Millerton Iron Company, under the courteous guidance of the manager, General Walter Phelps; thence to the Weed Ore Bed, at Boston Corners, Mr. George Williams, lessee; thence to the Copake Iron Works. Mr. Frederick Miles, the proprietor, after exhibiting his works and products, with generous hospitality conveyed the members in carriages, by way of Bashbish Falls, to Mount Washington, where he had provided dinner for the party. After dinner, Mount Everett was ascended, and a grand view of the surrounding country obtained. The party then returned by carriage and rail to Amenia.

On Friday morning, the Institute went on the Harlem road to Millerton, where a special train was provided by the Connecticut Western Railroad. The Phœnix Furnace, of Mr. C. S. Maltby, at Millerton, was first visited; thence to Ore Hill, where the Old Salisbury Mine was inspected; thence to the Chatfield Mine, owned by the Barnum-Richardson Company and the heirs of Holley & Coffing, where Col. Harlow P. Harris received the party with abundant cordiality; thence to Lakeville for dinner, opportunity being here offered to visit the extensive cutlery works of the Holley Manufacturing Company. After dinner, the party, passing *en route* the Twin Lakes, visited the East Canaan Furnace of the Barnum-Richardson Company, under the guidance of Mr. W. C. W. Barnum and Mr. N. C. Ward; thence to Allen's Marble Quarry, Mr. Maxwell, lessee, where marble was being quarried for the new State House at Hartford.

The party returned to Lakeville for the night, and were entertained by Gov. Holley at his residence in the evening.

On Saturday morning, the party, strongly reinforced in numbers by ladies of Lakeville, took a special train on the Connecticut Western Railroad to Davis Ore Bed (Forbes Ore Bed Company); thence by special train on the Housatonic Railroad to the Falls of Fall Village; thence through Great Barrington to the Van Deuzenville Furnace of the Richmond Iron Company; thence to the anthracite furnace of the Pomeroy Iron Works, at West Stockbridge, Mr. W. M. Kniffen, general agent, who conducted the party through the works; thence to the Leet Mines, leased by the Richmond Iron Works, and the Hudson Iron Company's mine, Mr. R. Van Buskirk, superintendent; thence to the State Line on the Boston and Albany Railroad, and to the Richmond Iron Company's Works, at Richmond, Massachusetts.

After inspection of the latter works, the members assembled at the office of the company, where they were most cordially welcomed and hospitably entertained by Mr. J. H. Coffing, on behalf of the Richmond Iron Company.

Passing over the Boston and Albany Railroad to Pittsfield, where some of the members left for the East, the party continued down on the Housatonic Railroad to Canaan, connecting there with the Connecticut Western train for Millerton, on the Harlem road, and thence proceeded to New York.

PHILADELPHIA MEETING,

February, 1878.

THE first session was held in the rooms of the American Philosophical Society, on Tuesday evening, February 26th.

The President, Dr. T. Sterry Hunt, called the meeting to order, and after a few introductory remarks concerning the importance of theoretical and speculative science, which often involves principles of the highest economic value, and, more than all that, serves to enlarge our conceptions of the universe, and ennoble us, by the cultivation which it affords to our most exalted faculties, proceeded to discuss some points in the chemistry of the atmosphere.

It is known that there is in the crust of the earth a great amount of oxidized carbon, not only in the shape of coal, but also in the graphite or plumbago of the crystalline rocks, in the various bituminous shales or pyroschists, which are found in all succeeding rock-formations, and also in the forms of bitumen and petroleum. All the analogies of nature lead us to conclude that these various carbonaceous substances have had an organic origin, and have been generated by the deoxidation of carbonic acid, a process effected by the growing plant, and attended with the liberation of oxygen. He showed that the carbon of a layer of coal covering the whole earth's surface to the thickness of one meter, would, in its production from carbonic dioxide, liberate an amount of oxygen equal to that now present in our atmosphere. But bituminous coal contains also a large amount of hydrogen, derived from the deoxidation of water, which implies the liberation of a farther portion of oxygen. The amount from this latter source would equal, for the various coals and asphalts, from one-eighth to one-fourth, and, for the petroleums, one-half of that set free in the deoxidation of the carbon which these hydrocarbonaceous bodies contain. From what we know of the composition of the stratified rocks, it is probable that they include an amount of deoxidized carbon and hydrogen many times greater than that contained in a layer of coal one meter in thickness, and, consequently, that the disengaged oxygen in past ages must have far exceeded that now present in our atmosphere. To this must be added

also the oxygen set free in the generation of metallic sulphides by the deoxidation of sulphates, which is effected through the agency of organic matters; a process which finally gives to the atmosphere the oxygen of the sulphates. How far the excess of oxygen from these various sources may have been consumed in the peroxidation of the ferrous oxide liberated in the decay of the silicates of crystalline rocks, cannot be estimated.

But the amount of carbonic dioxide removed from the air by vegetation is small, when compared with that absorbed in the production of limestone. Calculations show that there has been consumed, in this way, a quantity of this gas equal, probably, to not less than two hundred atmospheres of the weight of our present one. At temperatures at which life can exist, however, a pressure of less than one-half that amount would reduce carbonic dioxide to a liquid. Unless, then, we admit that vegetable and animal life could exist under such conditions, we must suppose that this amount of gas was not present at any one time in the atmosphere, but was supplied from some external source, as fast as it was consumed in the generation of limestone and coal.

It was then shown that this source could not be found in the earth's interior, so that we are driven to the hypothesis that a supply of carbonic dioxide has come from beyond our earth. If we suppose that our atmosphere is not terrestrial, but cosmical,—that it is, in short, a portion of a universal elastic medium, which constitutes the interstellary ether, extending throughout all space, and condensed around centres of attraction according to their mass and temperature,—we may conclude, from the laws of static equilibrium, and of the diffusion of gases, that any disturbance in the composition of our terrestrial atmosphere, whether due to the disengagement, or to the absorption and condensation, of any gas or vapor, would affect the universal atmosphere. In this way, the fixation of carbonic dioxide at the surface of our own, or of any other planet, would bring in fresh supplies of this gas from outer space; and in like manner any excess of oxygen gas which had been liberated, would be dissipated.

Such a hypothesis is not wholly new, as it had been foreshadowed by Sir William R. Grove, more than thirty years since, and had, moreover, been considered in some of its bearings by Mattieu Williams, and in some others, by the speaker, in an essay published in 1874. The relation of these secular changes in the constitution of the atmosphere to the climate of former geologic periods was noticed,

and it was shown that we have here an explanation of the tropical climate formerly prevailing in polar regions, and of the slow refrigeration which can be traced through the tertiary ages down to our own time. Its bearings on the various hypotheses of former glacial periods are also important.

The spectroscope has taught us the similarity of chemical composition throughout the worlds, but the considerations which have been set forth to-night lead us to the conclusion that ties more material than the pulses of light bind us to the outer universe, and that there is no physical change going on in our atmosphere that does not involve consequences which are felt throughout all worlds.

The following papers were then read:

The Manufacture of Artificial Fuel at Port Richmond, Philadelphia, by E. F. Loiseau, of Philadelphia.

The Economy to be effected by the use of Red Charcoal, by Bernard Fernow, of Brooklyn, N. Y.

Manganese Pig, by Dr. R. W. Raymond, of New York City.

The second session was held on Wednesday morning, in the hall of the Franklin Institute, when the following papers were read:

The Mesozoic Formation in Virginia, by Oswald J. Heinrich, of Philadelphia.

Pulverized Zinc, and its uses in Analytical Chemistry, by Dr. Thomas M. Drown, Lafayette College, Easton, Pa.

The Fire Clays and associated Plastic Clays, Kaolins, Feldspars and Fire Sands of New Jersey, by Prof. J. C. Smock, Rutgers College, New Brunswick, N. J.

Note on the "Blue Process" of Copying Tracings, by P. Barnes, of Plainfield, N. J.

The third session was held on Wednesday afternoon, in the hall of the Academy of Natural Sciences, when the following papers were read:

The Nickel Ores of Orford, Quebec, Canada, by W. E. C. Eustis, of Boston, Mass.

Note on the Drainage of a Flooded Ore Bank, by J. Birkinbine, of Philadelphia.

The Strength of Wrought Iron as affected by its Composition, and by its Reduction in Rolling, by A. L. Holley, of New York City.

An Improved Tripod for Surveying Instruments, by Prof. J. H. Harden, University of Pennsylvania, Philadelphia.

A Suspended Signal for Surveying, by Prof. Henry S. Munroe, School of Mines, New York City.

On Wednesday evening the members attended a reception given to the Institute by the Engineers' Club of Philadelphia, at the Penn Club.

The fourth and concluding session was held on Thursday morning, in Memorial Hall, Centennial Grounds.

The following persons, duly proposed and recommended by the Council, were elected to membership in the Institute.

MEMBERS.

Bovey, Prof. Henry T.,	McGill University, Montreal, Canada.
Bulley, Reginald H.,	Canton, Ohio.
Davis, Chester B.,	Coalburgh, W. Va.
Ferguson, E. M.,	Pittsburgh, Pa.
Hahn, H. C.,	Wyandotte, Michigan.
Hamilton, Alexander,	Johnstown, Pa.
Hamilton, Emery M.,	New York City.
Kloman, Andrew,	Pittsburgh, Pa.
Laureau, L. G.,	New York City.
Morgan, Thomas R.,	Alliance, Ohio.
Patch, M. B.,	Houghton, Mich.
Robinson, T. W.,	Cleveland, Ohio.
Young, Horace G.,	Trinidad, Colorado.

ASSOCIATE.

Holbrook, Levi,	New York City.

The following papers were then read:

Some New Points in the Geology of Lancaster County, Pa., by Prof. Persifor Frazer, Jr., of Philadelphia.

The use of Red Charcoal in the Blast Furnace (discussion of Mr. Fernow's paper), by William Kent, Pittsburgh, Pa.

Remarks on some Minerals from Sterling Hill, N. J., by Prof. G. A. Koenig, University of Pennsylvania, Philadelphia.

Mr. J. S. Alexander, Chairman of the Museum Committee of the Institute, made the following communication:

The committee acknowledges the care bestowed upon the collection by the Pennsylvania Museum and the International Exhibition Company since its installation in Memorial Hall.

The present arrangement for the space occupied expires May 10th next, when

a change in the place of deposit may be decided upon with a view of securing for the collection greater permanence and fuller installation. This matter will be the subject of a full report at the next annual meeting of the Institute.

As some of the foreign donations contain material which under a strict construction of the customs laws is subject to duty, examinations and appraisement have been made by the customs officials, and duties to the extent of $2444 levied; but while advertised, no part of the collection has been sold as yet, the sale having been stayed till May to await Congressional action. A resolution remitting these charges has been introduced in the House by the Hon. A. S. Hewitt, and favorably reported back from committee, but has gone no further. The members of the Institute are requested to urge upon Congress the favorable consideration of this resolution.

A communication has been received from the German government requesting a collection of Claiborne (Ala.) Tertiary and New York Silurian fossils, and offering in exchange a collection of Rüdersdorf shells. Prof. E. A. Smith, State Geologist of Alabama, has already sent in as a nucleus a collection of well-prepared Claiborne shells. Members having it in their power to assist in this matter are requested to co-operate with the Museum Committee to make the collection worthy of the Institute.

The following papers were then read by title:

The Late Operations on the Mariposa Estate, by C. M. Rolker, of Reno, Nevada.

Memoranda showing the Percentage of the different Expense Accounts in Mining Hematite Ore at Manhattan Mine, Sharon Station, N. Y., by J. F. Lewis, of Amenia, N. Y.

Note on the Cost of the Converting Works of the Edgar Thomson Steel Company, by P. Barnes, of Plainfield, N. J.

An Index of Official Geological Reports of States and Territories, by Prof. Frederick Prime, Jr., of Lafayette College, Easton, Pa.

The following resolution was then offered, and unanimously adopted:

Resolved, That the cordial thanks of the Institute be expressed to the American Philosophical Society, the Franklin Institute, the Academy of Natural Sciences of Philadelphia, and the Pennsylvania Museum and School of Industrial Art, for their liberal offers of accommodation for the sessions of the Institute; to the Pennsylvania Academy of Fine Arts and the Permanent Exhibition Company for their courteous invitations to visit their collections, and to the Engineers' Club of Philadelphia for its very enjoyable reception and hospitality.

The President, Dr. Hunt, announced that the Council had under consideration the feasibility of holding the May meeting of the Institute in Chattanooga, in accordance with the invitation given by General Wilder at the Wilkes-Barre meeting. Due notice would be given when the arrangements were completed.

Dr. Raymond moved, in view of the southern locality of the projected meeting, that the Council be authorized by the Institute to change the time of the next meeting if it be thought desirable or necessary. He said that this action would doubtless be necessary to legalize the elections of the annual meeting. The motion was carried.

The following notices of amendments to the Rules, to be acted on at the annual meeting, were given:

By Mr. A. L. Holley: To amend Rule VI, referring to meetings, so as to change the time of the annual meeting from May to February, the date of this annual meeting to be the third Tuesday of February; and further, that the other two meetings in spring and fall shall be held at such times and places as the Council may decide. Also, to amend Rule III, with reference to the dues of members elected at the February meeting, to accord with the amendments to Rule VI.

By Prof. F. Prime: To amend Rule III by taking out the passage, "and members and associates permanently residing in foreign countries, excepting Canada, shall be liable to such annual or other payments only as the Council may impose to cover the cost of supplying them with publications;" also to amend Rule II by taking out, "and members and associates permanently residing in foreign countries shall not be entitled to vote or to be members of the Council."

After a few congratulatory remarks by the President the meeting was declared adjourned.

Secretary's and Treasurer's Statement of Receipts and Disbursements from May, 21st, 1877, to May 3d, 1878.

DR.

Balance at last statement,	$702 86
Received for dues from members and associates,	3890 00
Received from sale of *Transactions*, and for authors' copies,	186 75
Interest,	49 88
	$4828 99

CR.

Subscriptions to *Engineering and Mining Journal*, including postage,	$1099 90
Extra copies of *Engineering and Mining Journal* sent to authors and secretary,	91 57
Paid on account for expenses on Vol. V Transactions,	1500 00
Authors' copies,	81 50
Printing circulars,	77 35
Postage,	279 91
Freight, expressage, etc.,	63 78
Stationery,	23 23
Engraving,	298 00
Incidental expenses of meetings,	84 10
Secretary's salary,	1200 00
Secretary's expenses, attending meetings,	48 82
Balance,	80 83
	$4828 99

PAPERS.

[*The papers following comprise, with a few exceptions, all the papers read at the three meetings, but owing to the change of system of preliminary publication it has not been found convenient, in this volume, to preserve the order in which they were read.*]

HYDRAULIC MINING IN CALIFORNIA.

BY AUG. J. BOWIE, JR., A.B., MINING ENGINEER, SAN FRANCISCO, CAL.

(Read at the Wilkes-Barre Meeting, May, 1877.)

BRIEF OUTLINE OF THE GENERAL TOPOGRAPHY OF THE GOLD REGIONS OF CALIFORNIA.

THE topographical features of California, as demonstrated by the explorations of the State Geological Survey, are found to be exceedingly simple. Three equidistant parallel lines can be used in conveying a general idea of the physical geography of Central California.

A straight or "main axial line," whose course would be north 31° west, passing through the culminating peaks of the Sierra for a distance of five hundred miles, can be assumed as the eastern boundary of the State. A second parallel drawn fifty-five miles west of the "main axial line" will skirt the western base of the Sierra Nevada, along the edge of the foot-hills. A third parallel run equidistant from the second will represent "as nearly as possible the western base of the Coast Ranges." These parallel lines divide the State into three belts, namely, the Sierra, the Great Valley of California, and the Coast Ranges.

"This arrangement of the physical features holds good for a length of four hundred miles in the direction of the main axial line, comprising almost the whole of the agricultural and the greater part of the mining districts."*

The section of the country which is of immediate interest to the miner is the western slope of the Sierras. These mountains, rising in a short distance from the Sacramento plains to elevations of over seven thousand feet, with occasional peaks ten and twelve thousand feet high, are cut by numerous deep and precipitous gorges or cañons, through which drains the immense watershed of the Sierra, supplying the main rivers of the State and ultimately emptying into the Pacific Ocean.

Between these cañons, ridges or divides are formed, on top of

* See vol. i, p. 5, Geological Survey of California. J. D. Whitney, State Geologist.

which gold placers are found. These gold-bearing surface deposits extend from Shasta in the north to Kern County in the south, the most extensive deposits occurring in Plumas, Sierra, Placer, and Nevada counties. The term *shallow placers* is applied to deposits of gravel and earth whose thickness varies from a few inches to five or six feet in depth, to distinguish them from *deep placers* or detrital accumulations found in ancient channels covering large areas, and varying from one hundred to several hundred feet in depth.

THE DISCOVERY OF THE GRAVEL DEPOSITS CONTAINING THE PRECIOUS METAL.

The pioneer miner, after working out the river bars, followed up the stream to find "the source of the gold." Its existence was discovered from slides, denudations, and breaks in the channels, which subsequent explorations proved to be the ancient river system of the State, whose general course is nearly at right angles to the present river system of California.

The indefatigable prospector advancing further into the unexplored mountains again discovered gravel-beds at elevations of several thousand feet above the present water-level. The streams flowing through the precipitous cañons of the high Sierra aided materially in the development and discovery of the gold-fields. Their waters were soon appropriated for gold-washing, and thus was inaugurated the system of mining-ditches, which to-day extends over several thousand miles.

The immense gold-bearing drift inclosed between channel walls, or "rim rock," as it is called, was explored by means of tunnels driven in from bordering cañons, tapping the bottom of the deposit, enabling the extraction of the pay stratum, which was subsequently sluiced to extract the gold. This style of mining received the name of "deep placer mining."*

Little by little the "top dirt" of these deposits, composed chiefly of light soil, clay, fine gravel, and streaks of sand, was washed off, and in places considerable gold was thus obtained. Canvas hose was brought into use to convey the water over the banks for washing the dirt, and from this originated hydraulic mining. In the

* Deep placer mining is now carried on in those sections of the State where the rich deposits are covered with thick beds of lava, rendering hydraulic mining impracticable.

progress of the work strata were found composed of boulders, pebbles, quartz, sand, and various rocks cemented together, requiring the use of powder to break them up. The color of this cement was in places white or reddish, and sometimes blue.

Shafts sunk in these strata discovered the presence of gold in great abundance, and a fresh enthusiasm was thus infused into gravel mining, already on the wane, as the river bars were becoming exhausted.

THE GOLD-BEARING DEPOSITS OF CALIFORNIA.

The auriferous deposits of California are chiefly confined to the western slope of the Sierra Nevada Mountains. The principal counties in which placer mining is carried on are Shasta, Trinity, Plumas, Sierra, portions of the east side of Butte and Yuba counties, also Nevada, Placer, El Dorado, Amador, Calaveras, Tuolumne, Mariposa, and Stanislaus counties. "It is here," says Professor Whitney, "that the belt of metamorphic slates and sandstones, which is peculiarly the gold-bearing formation of the State, is developed to its greatest width, and least concealed from the miners' explorations by the presence of overlying non-metalliferous formations. It is here that the physical conditions have most favored the concentration of the gold in the detrital formation, so that it could be obtained by simple washing, without the necessity of mining for it in the solid rock, and perhaps more readily and more abundantly than any region ever opened to seekers after the precious metal."*

The gold deposits are found in river channels, in basins, and on flats; also as isolated and rolling hills; and occur either as accumulations of gravel alone, resting directly on the surface, or as accumulations of detritus, consisting of gravel, sand, drift, pebbles and boulders of all sizes, covered with lava and other volcanic products. Their geological ages are Post-tertiary and Tertiary. Quantities of fossil wood and numerous remains of land and water animals have been found in the deposits, and are being constantly unearthed as the mines are worked.

The auriferous alluvions mark the lines of ancient rivers, whose action on a grand scale was analogous to that which can be daily seen along the streams which receive the tailings from the hydraulic claims now being worked. Volcanic eruptions have in places covered

* Geological Survey of California, vol. i, p. 214. J. D. Whitney.

these deposits with lava and tufa, hundreds of feet deep. Denudation and erosion, the companions of Time, have subsequently played their parts, and later in turn the product of volcanic activity has been overlain with gold-bearing detritus.

These gravel channels are from a few hundred to several thousand feet wide, and range from the shallow placer to a drift six or seven hundred feet in depth. Their richness in gold varies in general, as well as in particular, in the many parts of the State.

Ferruginous-colored spots, so well marked in "upper or top gravel," are not always as productive in gold here as they are generally found to be in the gold alluvia of the Ural Mountains. A black sand, composed chiefly of glancing grains of magnetic iron, generally accompanies the precious metal, though it does not indicate its presence.

Dr. T. Sterry Hunt, speaking of the erroneous impressions which prevail in reference to the presence of black sand in auriferous alluvions, very appropriately remarks that "similar black sand residues, consisting chiefly of various ores of iron (sometimes oxide of tin and other minerals), may be obtained from the washing of almost all sands and gravels derived from crystalline rocks, and that the occurrence of a black sand, therefore, in no way indicates the presence of gold. When, however, this metal is present in a gravel, it, from its great weight, remains behind with the black sand and dense matters in the residue after washing."*

THE DISTRIBUTION OF GOLD IN GRAVEL DEPOSITS.

It is not unfrequently stated that it is from the washing of the entire banks that the gold is to be expected, it being disseminated throughout the whole deposit. That deposits are or are not auriferous for their entire depth will not be discussed; but that gold is proportionately diffused throughout the detritus, so that it could all be considered as "pay," is denied by experience and facts, as proven in California and other parts of the world.† It is owing to that

* Geological Survey of Canada, Report of the Progress, 1863–66, p. 86.

† Deposits between Tagilsh and Ekaterin, Die Lehre von den Erzlagerstätten, Von Cotta, p. 556. See article on "Gold Deposits," by M. A. Selwin, Geologist of Victoria, Quarterly Journal Geo. Soc., 1858, p. 583. See "Gold Deposits of Jarugua," Annales des Mines, 1817, vol. ii, p 202. See Gold Deposits of Santa Rita, Contagallo and Minas Novas, Geology and Physical Geography of Brazil, Hartt, pp. 50, 51, 159, 160. See account of the gold-fields of Yesso, "Mineral Wealth of Japan," Henry S. Munroe, E.M., Transactions American Inst.

circumstance that miners have coined the expression "pay dirt," which means that stratum or those strata which contain the bulk of the precious metal.

In some districts gold is found thirty to fifty feet above the bedrock, in sufficiently paying quantities to wash, and in some shallow* banks gold is quite generally disseminated. Both at San Juan and North Bloomfield the gold is more or less scattered throughout the deep banks, and diggings near Forest Hill, Placer County, twenty to sixty feet above the bedrock, have yielded profits.

The top-gravel of the channel deposit which passes through Columbia Hill, Nevada County, has in several instances been successfully washed. This is especially remarkable on account of the great depth of this deposit, which from the explorations on Badger Hill and Grizzly Hill, is inferred to be six hundred to six hundred and twenty feet deep. With such facilities as would be afforded by a heavy grade, sufficient dump, and cheap water, deposits of this character, consisting of a fine light quartz wash, containing no boulders or pipe-clay, though they contained an insignificant amount of gold per cubic yard, could be successfully worked by the hydraulic method.

Experience has proved that the quantity of gold found in "top-gravel" is insufficient to warrant any large investment based solely on its value. Under exceptional conditions and circumstances the upper strata have in some cases yielded handsome returns, but on the whole the general results have been anything but fortunate.

It is, therefore, a well-established fact that the pay-dirt is obtained not from the washings of the entire bank, but chiefly from that stratum or those strata† which are in most cases within eight or ten feet of the bedrock.‡ Where this is of slate upturned on its edges, the gold frequently permeates§ it one or two feet. It also

Mining Engs., vol. v, p 236. See Engineering and Mining Journal, December 2d, 1876.

* See description of the auriferous deposits at Morse's and Growler's Creeks, the Gold-fields and Mineral Districts of Victoria, R. Brough Smyth, p. 84.

† On the subject of the relative position of gold in deposits, see report of Mr. Stutchbury, Government Geologist of N. S. W. See Die Lehre von den Erzlagerstätten, Von Cotta, vol. i, p. 101.

‡ See account of the gold deposits at Nation's Gully, New Gully, Never Mind Spur, Beechwood District; also workings at Balaarat, the Gold-fields and Mineral Districts of Victoria, R. Brough Smyth, pp. 81, 82, 87, 131, and 178.

§ See Murchison's description of "Diggings at the Soimanofsk Mines," Siluria, p. 456, vol. i, Russia and Ural Mountains, p. 487; also, see account of the "Gold Deposits in Woods Point District and Windlass Hill," Gold-fields and Mineral Districts of Victoria, by R. Brough Smyth, pp. 86, 106.

SKETCH OF SHAFT NO. 1.

MALAKOFF

North Bloomfield Gravel Mining Co.

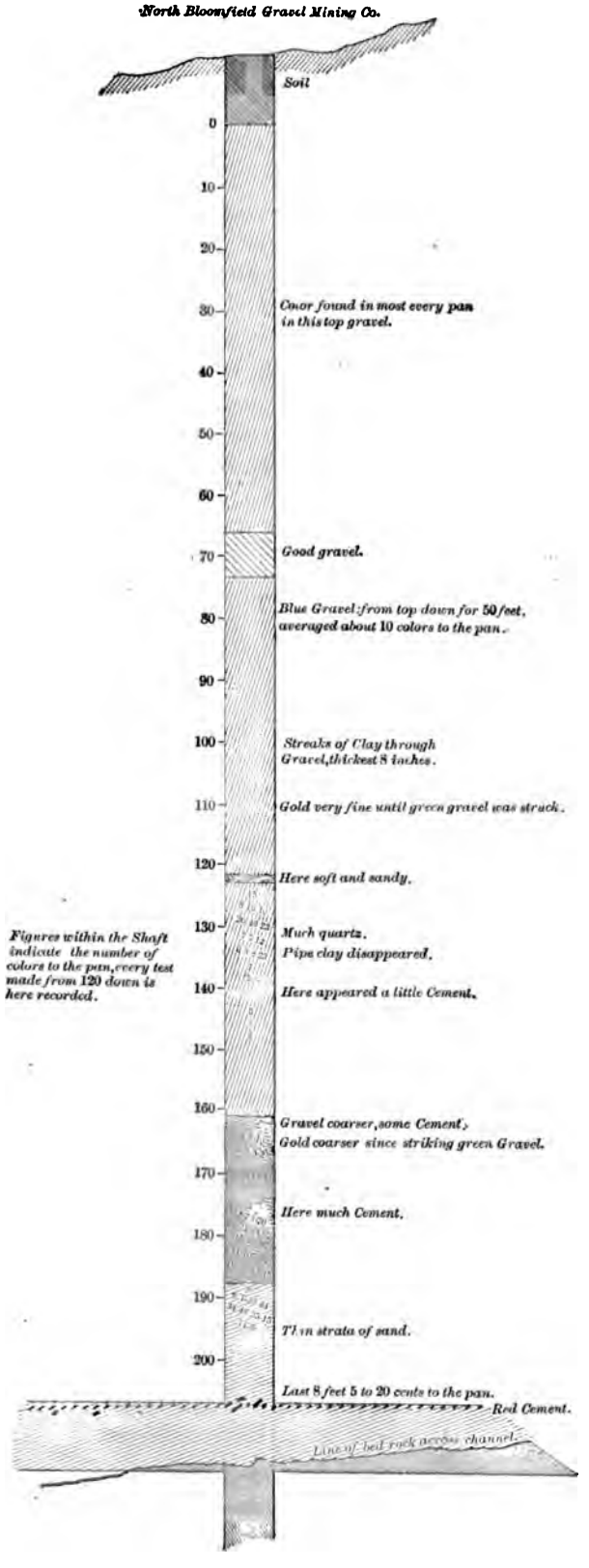

Figures within the Shaft indicate the number of colors to the pan, every test made from 120 down is here recorded.

occurs in thin streaks of cemented gravel scattered here and there in the alluvial deposits, and not unfrequently a fine lamina gold is found in the grass roots.*

This last-mentioned circumstance is in no way localized, as similar facts have been noted in other countries. Mawe calls attention to the existence of gold in the grass roots on Mt. San Antonio,† in Brazil; and Walsh states that gold was first discovered in the deposits between S. Jose and S. João, Brazil, by Paulistas, who, pulling tufts of grass, "found numerous particles of gold entangled in the roots."‡

The gold alluvia found near and along the banks of the Tuolumne River, Stanislaus County, present some striking examples of the distribution of the precious metal. The pay-dirt in the Chesnau Claim is confined to within six feet of the bedrock, whilst in the Sicard Claim, situated about six hundred feet south of it and across a ravine, with banks from twenty to forty feet high, the gold is more generally disseminated as long as there are no sand strata, but whenever the latter appear the pay is confined to near the bedrock.

Sir Roderick Murchison, describing the gold alluvia of the rich mine of Peshanka, near Bogoslofsh,§ says: "Most of the gold has been extracted near the centre of the detrital mass, whose maximum thickness is about seven feet, and which is clearly divisible, as elsewhere, into two parts, viz., overlying clay and shingle, and auriferous sand beneath."

---

* In reference to the occurrence of gold, the following note, taken from the Engineering and Mining Journal, February 10th, 1877, relative to the discovery of pay-gold in the New South Wales coal-measures, will be found interesting. Mr. C. S. Wilkinson, F. R S., writes from the Geological Survey Office, Gulong, under date of November 25th, to the Mining Department, as follows: "During my examination of the Tallawang Gold-field Reserve, I observed the important fact that the gold found in tertiary alluvial deposits at the old Tallawang and Clough's Gully diggings has been chiefly derived from conglomerates in the coal-measures. These conglomerates are associated with beds of sandstone and shales containing the fossil plant of our coal-measures, the Glossopteris. . . . . This is the first time that gold has been noticed to occur in payable quantity in the coal-measures in the colony, and it is not unworthy of remark that we here possess one of the most ancient 'alluvial' deposits in the world."

† Mawe's Travels, p. 264.

‡ Walsh's Notices of Brazil, 1828, 1829, vol. ii, p. 122. Note—"The silver mines of Potosi were discovered by a Spaniard, who in ascending the mountain seized a bush to assist him, and this giving way, he found the roots embossed with silver."

§ Russia and Ural Mountains, Murchison, vol. i, p. 482.

At Minas Novas, in the Province of Minas Geraes, Brazil, the "greater part" of the gold is in a deposit called cascalho, which adjoins the decomposed bedrock. The cascalho is a conglomerate, composed of rounded quartz pebbles of various sizes, which have been cemented together with ferric oxide. "To this conglomerate the search for precious metals has been chiefly confined. Over this gravel lies a mass of red drift, varying in thickness from a few inches to fifty feet."*

The stratum of cascalho mined from the bed of the river Jigitonhonha at the Mandanga Diamond Works, consisted of the same materials as that of the other gold districts of Brazil. Large conglomerate masses of rounded pebbles, cemented together by ferric oxide, found on the banks of the stream, occasionally contained gold and diamonds. The gold extracted from the cement gravel at Caparatra, situated higher up the river, was accompanied by a great abundance of "black oxide of iron."†

In the Patricksville Light Claim, Stanislaus County, Cal., the pay stratum is six or seven feet thick and adjoins the bedrock. The gold is concentrated in this gravel deposit as long as there are sand strata in the bank, but with their disappearance it is more diffused throughout the detritus. Whilst working this claim a large hole in the bedrock twenty-five feet deep was bottomed. The hole was filled with gravel, but no pay was obtained. The pay stratum was found to be on a level with and a continuation of the pay stratum of the rest of the claim. On the other hand, at the Chesnau and French Hill Claims, whenever these hollows are found, a large yield of gold is invariably obtained.

The experience of miners in the gold-fields of Victoria has led to the conclusion that "in large auriferous rivers gold is always found on the bars or point, and not in the deep pools or bends."‡ In substantiation of these facts are cited Reid's Creek, Wool Shed, Twist's Fall, or Yackandandah, near Osborne's Flat, and Rowdy Flat; at each of these places large holes were cleaned out, and "only a few colors obtained, whilst shallow flats immediately below them were very rich."

At French Hill, Stanislaus County, where the bedrock was undulating, and in depressions found around a little hill formed by a

* Geology and Physical Geography of Brazil, Hartt, pp. 159-60.

† Mawe's Travels, p. 222-7.

‡ The Gold-fields and Mineral Districts of Victoria, R Brough Smyth, p. 134.

sudden rise in the bedrock, the gravel paid better than in any other portion of the claim. The gold-fields south of Miask* in the Ural Mountains, present a similar case, all the undulating ground and depressions around conical hills being the most productive in gold. The bulk of the pay-dirt in the cement gravel of Nevada County is within the first thirty feet of the bottom.

INVESTIGATION OF THE COMPARATIVE VALUES OF THE DIFFERENT GRAVEL STRATA AT NORTH BLOOMFIELD.

It was the result obtained by the North Bloomfield Gravel Mining Company from washing three and a quarter million cubic yards of top gravel (1870–74), yielding 2.9 cents per cubic yard, and leaving a profit of only $2232.84, that determined capitalists interested in these claims to investigate the question of the comparative values of the upper and lower gravel deposits.

With their experience of the past and considering the contingencies of proposed explorations, and the attendant costs of an enterprise which had for its ultimate aim the working of the entire auriferous deposit, after mature deliberation it was (as a preliminary step) deemed of paramount necessity to ascertain, as far as practicable, the relative values of the different strata of the gold-bearing alluvia, so that they might judge to what extent the prospects would justify their expenditures. A series of explorations was subsequently carried out under the immediate supervision of their able engineer, Mr. Hamilton Smith, Jr., and the result of his investigation is best given in his own words: "To test the comparative values of ground developed by the shaft-workings and top-gravel, two hundred and forty samples, weighing in all two and one-half tons, were taken at even distances from the sides of the drifts, and the same quantity sampled from different layers of the upper bank. These samples were carefully panned out, and yielded, the blue $1.10 per ton, the white a large number of colors, but an inconsiderable weight of gold. The gold from the blue dirt was from 50 to 100 times heavier than that from the white gravel."† Although the gross yield from this sampling of the upper gravel was slight, it is a noteworthy fact that in each of the 240 pans one or more colors of gold were found.

---

* Russia and Ural Mountains, Murchison, p. 488.

† The North Bloomfield Gravel Mining Co., Report by H. Smith, Jr., pp 17, 18.

COMPARATIVE VALUE OF THE GRAVEL STRATA IN STANISLAUS COUNTY.

At the Light Claim, Patricksville, a comparative test of top and bottom gravel was made. 58,340 cubic yards top gravel* yielded 2 cents per cubic yard. The bottom gravel† (four feet deep) was then washed up, when it was discovered that this ground had been extensively drifted; but notwithstanding this fact, 4966 cubic yards yielded 55 cents per cubic yard. A trial of top dirt was also made at the Light Claim, La Grange. 41,038 cubic yards top dirt‡ yielded 3 cents per cubic yard, and 7242 cubic yards of bottom dirt§ yielded 94 cents per cubic yard.

SAND STRATA.

In the gold-bearing drift of the Sierra Nevada, layers consisting exclusively of wash-sand are generally found to contain very little if any of the precious metal.‖ In gulch mining it sometimes happens that from the position of the bedrock the detrital accumulations assume the form of reclining cones, the apex reposing upon the top of the hill. Where such is the case, the bulk of the gold is concentrated in the lower end of the deposit. These gulches are frequently found to be exceedingly rich.

It is not within the scope of this paper to discuss the origin of auriferous detritus, or in any way to account for the mode of occurrence of gold, but these general facts are merely cited as an explanatory outline of the subject, and to show the reason why a system of sluicing is adopted which bottoms the entire deposit.

THE RECORDS OF GOLD-WASHING.

The early record of gold-washing extends to the days of the Greeks and Romans. History has familiarized us with the wonders of the Pactolus and Tagus, and it is a fact¶ that the diggings north

---

* $1200. † $2775.07, ground two-thirds drifted out. ‡ $1500. § $6709.72.

‖ From Whiskey Run to Coquille River, Oregon, the beach sands, formerly very rich, have been extensively worked for 3 or 4 miles along the seacoast. The productive stratum was a layer of black sand 1 to 2 feet thick, buried from 2 to 5 feet below lighter sands. The gold occurs in minute particles. This sand likewise contained some platinum and iridosmine.—Ext. Trans. California Acad. Sciences, W. A. Goodyear, of the State Geo. Survey.

¶ Strabo, book iv., chap. vi, 12. Footnote Siluria, p. 449.

of Aquitania produced in two months such a large amount of gold that its price fell 33 per cent. throughout the whole of Italy.

Gradually, one after the other, the well-known deposits of the Old World have been exhausted. The alluvia in Siberia, however, kept alive the interest in gold-washing, and the subsequent discoveries in California and Australia infused a new life into this kind of mining. Since that time gold-washing has been carried on in different parts of the world on a most extensive scale, but the application of water under great pressure to "gold placer mining" is an outgrowth of the present century. Its use is chiefly confined to the Pacific Coast, and consequently the contributions to mining literature relative to its application have not been numerous.

HYDRAULIC MINING.

It was left to the untiring ingenuity of the California miner in his battles for fortune to devise the economical method of hydraulic mining, by which mountains of auriferous gravel are removed through the agency of a continuous stream of water, extracting the precious metals stored away by nature, and adding millions of hidden wealth to the treasures of the world.

Independent of the financial importance of this most modern method of mining, its effects, from the gigantic scale with which it is now carried on, upon the system of drainage of the country as well as the navigation of rivers, will sooner or later bring it in direct conflict with agricultural and commercial interests.

Apart from the construction of ditches and tunnels necessary for the hydraulic washing of the gold-bearing drift, engineers, as a rule, have had but little to do with the subsequent working of this class of mines. The primitive placer mining of 1853 to 1865 has passed into history. Forty-inch wrought-iron pipes have been substituted for canvas hose and stove-pipes, and with the replacing of one-inch streams by a mass of water discharged through nine-inch nozzles, under four hundred feet pressure, the last remnant of the Argonauts'* method disappeared, and hydraulic mining, with one gigantic stride, has become an operation of such magnitude as to require the aid of science.

---

* The name is generally applied to those pioneers who arrived here in 1849–50.

THE DEFINITION OF HYDRAULIC MINING.

Hydraulic mining may be defined as the art of extracting gold from gold-bearing detritus, *i. e.*, surface deposits, placers, or washings, by means of water under great pressure discharged through pipes against the auriferous material. In working gold deposits by this method, it is essential to success that there should be, first, economical management; second, ample facilities for grade and dump; third, a sufficient head and an abundant supply of cheap water. As regards the "economical management," the same can be considered a *sine qua non* for success in all enterprises, but it is especially requisite here, as the value of this kind of mining is based on the great facility with which profitable results can be obtained at trifling costs from washing vast areas of ground which contain relatively per cubic yard insignificant amounts of precious metal, but in the aggregate, when expeditiously and skilfully worked, give large remunerative returns.

THE DUMP.

Without the dump, hydraulic mining is an impossibility. On this point too much stress cannot be placed. Where thousands of cubic yards of alluvions are being daily washed from their original positions into cañons, valleys, streams, or rivers, it is not the accumulations of a few months which must be considered, but places must be provided at lower elevations, where the immense hills of gravel, when "hydraulicked,"* can be redeposited; and in general a very much larger superficial area for this is requisite than was originally occupied by the material removed.

It sometimes happens in claims near or adjoining one another, working with the same dump on a light grade, that the bedrock in one is lower than that of the other. Where this occurs, the claim with the highest bedrock should be the last run off, so as not to interfere with the dump of the lower claim. An illustration of this condition of affairs is afforded by the Patricksville Hydraulic Claims, in Stanislaus County, where three claims, one tailing over the other, are annually worked. During the last two years the lowest claim, called the Chesnau, has been closed in the fall, its dump giving out, whilst the upper ones continued work. With the return of spring freshets, the cañon has been cleared of the débris,

* The words "hydraulicked" and "hydraulicking" are the coinage of the California placer miner, and custom has here sanctioned their use.

and washing has been regularly resumed in the Chesnau, continuing as long as the dump lasted. The upper claim is closed whilst the Chesnau is working, to avoid the too rapid filling up of the creek. If the two higher claims were worked at the same time, the Chesnau would soon be closed for an indefinite period.

TAILING INTO STREAMS.

It is supposed by many that the want of dump is remedied by discharging into a current or mountain rapid. This undoubtedly would be so were the gold placers on the borders of large, rapid, and well-confined streams; but in the mountains where the gold-bearing deposits are found, the rivers are narrow, shallow, only running water in quantity during the winter and early spring.

Some of the annoyances and difficulties arising from tailing into a stream can be seen on the Tuolumne River below La Grange. The river for seventeen miles above the town has a fall approximating eighteen feet to the mile. It is a large mountain stream (fed by the snows and rains of the Sierra Nevada), well confined by abrupt banks.* At La Grange† its width is five hundred and twenty-five feet. Three hundred yards below the town, opposite the Light Claim, it widens to seven hundred and fifty feet.‡ Down the stream from this point the hills for the succeeding three or four miles recede, but subsequently form prominent banks of the river. During high water in the winter opposite the Light Claim, at its greatest width, its average depth was ten feet,§ the centre of the channel being fourteen feet deep. When the La Grange Hydraulic Mining Company commenced work, in 1872, the bottom of the channel was a few feet deeper.

The Light Claim was worked in 1873, and by June 23d, 1874, 720,086 cubic yards of gravel had been discharged into the stream near the claim, and during the same period 975,064 cubic yards were dumped into the river from the Kelly and French Hill properties. The results at the expiration of twenty-one months were, that the channel opposite the Light Claim was filled up, the sluices were run out of grade, the river bed was shoaled on all sides, the water of a

* The river opposite the old French Hill dump is five hundred feet wide.

† At the Ferry. The grade of the river from here to its mouth is only a few feet to the mile.

‡ Extreme width during high water. Width at lower sluice, 700 feet.

§ Deeper in narrow places.

former rapid stream straggled over the accumulated débris with a barely perceptible motion, and it is hardly necessary to add that the claim was closed.

The spring freshets of 1875–76 were unusually severe, clearing the river at the claim for its entire width, and leaving a dump of over eleven feet along its west bank. This spring* (1876) work was resumed, and since then 48,280 cubic yards have been moved in the "Light," and 212,346 cubic yards from French Hill, which is a quarter of a mile up stream. At present† the river is filled up nearly its entire width to the height of the sluices, and the water is confined to a strip thirty feet wide, discharging one foot deep over a bar.

Where a small amount of tailings is discharged into narrow and steep cañons, winter rains and spring freshets suffice to clean them out, but where the quantity is large, in spite of the water the ravines gradually fill up, and hydraulic mining in those localities ultimately ceases. It occasionally happens that the want of dump room is obviated by a tunnel, and by means of it the tailings are conveyed into large and precipitous ravines, consigning them to the action of time and water for their further removal.

PRELIMINARY WORK.

As a prerequisite to success in the selection of a tunnel site, considerable preliminary work is demanded. It necessitates the study of the deposit, the ascertaining of the position of the channel, the depth of the bedrock, covered generally with hundreds of feet of detritus, and the calculation of the costs of the work, with estimates of the yield of the ground, all of which afford a fine field for the engineer.

Hence, it is a prime necessity for the hydraulic miner to obtain accurate information on these points. The explorations of the North Bloomfield Company furnish a remarkable instance of the extent to which such preliminary work has been successfully carried out.

To determine the value of their claims and the feasibility of working them by the hydraulic process, four prospect shafts were sunk to ascertain the position of the channel and the depth to the bedrock. Of these shafts No. 1 alone struck the main channel, developing 135 feet of blue gravel,‡ and finding bedrock at a depth of 207 feet.

* April 10th, work was resumed on top dirt.

† Dry season, months of August, September, and October.

‡ This 135 feet of gravel yielded 46 cents per cubic yard.

Drifts were driven from the bottom of this shaft a distance of 1200 feet on the course of the channel, and its width was approximated at 500 feet. The aggregate length of the channel explorations was over 2000 feet. The gross cost of the entire prospecting work was $63,956.20.*

Having ascertained the value of the gravel, the depth and position of the bed-rock and channel being determined, the company decided to open their mines, and a working tunnel was then located.

The profitable removal of the gold-bearing detritus by the hydraulic method requires that the greatest facilities should be afforded for the rapid transport of the material. Where a dump can be obtained and it is practicable, open cuts are run sufficiently deep in the bed-rock to bottom the channel. In those cases where open cuts are not serviceable, a tunnel is requisite.

TUNNELS AND THEIR LOCATION.

The object of tunnels in gravel mining is to afford suitable means for the hydraulic washing of the auriferous deposits, and from their general relative positions they are fitted with sluices† to catch the gold from the washings. The size of the tunnel is dependent on the requirements, viz., with a six-foot flume it should not be less than 8 by 8 feet; with a four-foot flume, 5 by 7 feet.

In locating drainage-tunnels, or in opening hydraulic claims which do not require tunnels, that place is to be selected from which the sluices, running on the straightest practicable line with a given grade, can bottom the major part of the "pay deposit" at the smallest possible expense.

Due regard should be had for the dump in the establishment of this line, and allowances made for contingencies arising from changes, such as depressions and holes in the bed-rock. It is advisable, besides allowing for grade and dump, to run the tunnel or cut from a point sufficiently deep to strike from fifty to seventy-five feet below the top of the bed-rock, at the point where connection is to be made with the surface.

---

* From the several drifts and breaks 21,614 tons of gravel were extracted, yielding $32,600, or $1.50 per ton. In one of the drifts the gravel paid 75 cents per ton, at a height of from 15 to 20 feet above the bed-rock. The actual yield from all the drifts was about $2.75 per cubic yard, and as determined by sampling, $2.01 per cubic yard. For particulars, see report of H. Smith, Jr., C. E. to the N. B. G. M. Co., 1871, p. 17.

† In the lower end of the N. B. tunnel no box-sluices are used.

This additional depth* is a matter of judgment, and in determining it one should be governed by the character of the bed-rock, extent of ground to be worked, and the position of the shaft. It is always an easy matter to ease up the grade, but if the main line of drainage is once fixed, and proves to be too high, it is a source of endless expense, and is frequently fatal to the enterprise.

At the Pioneer Mine, Grass Flat, Plumas County, the original owners in opening their claim ran a tunnel 4000 feet long. When midway in the channel the tunnel was found to be twenty-two feet above the bed-rock. The sum of sixty thousand dollars expended in this work was a total loss.

Generally the difficulty in locating tunnels is to find suitable places which do not involve heavy expenditures. Some idea of the extent of these preliminary operations may be obtained from the following memoranda concerning several tunnels on the ridge (Nevada County) driven within a few years past:†

Name of Mine or Tunnel.	Locality.	Length of Tunnel.	Average Grade of Tunnel.		Reported Cost.
			Inches per Sluice-box.	Feet per 100.	
			In. Ft.		
Boston,	Wolsey's Flat,	1600	10¼ to 12	7¼	$40,000
North Bloomfield,	Humbug Cañon,	8000	6½ " 12	4½	500,000‡
Farrell,	Columbia Hill,	2200	6 " 14	3½	Not complete.
English Mine,	Badger Hill,	1400	12 " 14	7	
American,	Below San Juan,	3900	10½ " 14	6¼	$140,000 ¿
Manzanita,	Sweetland,	1740	7 " 14	4⅛	62,000
Sweetland Creek,	Sweetland,	2200	8 " 14	4⅝	90,000 ¿
Bed-rock,	Below Sweetland,	2600	9 " 14	5¼	
French Corral,	French Corral,	3500	8 " 14	4⅝	165,000

To these may be added the principal tunnels driven in the mining district of Smartsville.

---

* Where the bed-rock disintegrates on exposure to the air, *i. e.*, soft bed-rock it is advisable to allow for considerable depth when practicable.

† Ext. Report on the Water and Gravel Mining Properties of the Eureka Lake and Yuba Canal Company. By James D. Hague, M. E.

‡ With 8 auxiliary shafts, increasing the cost, but diminishing the time required.

¿ Not from official reports.

Name of Tunnel.	Locality.	Length of tunnel.	Average grade of tunnel.	
			Inches per sluice-box.	Feet per 100.
		Feet.	In. Ft.	
Babb, . . .	Timbuctoo.	1200	5½ to 12	8.80
Pactolus, . .	" "	1700	6 to 12	4.16
Rose's Bar, .	" "	1600	6 to 12	4.16
Blue Gravel, .	Succor Flat.	1100	6½ to 12	4.50
Pittsburg, . .	" "	900	6 to 12	4.16
Blue Point, .	" "	2250	6 to 12	4.16
Enterprise, .	" "	1200	6 to 12	4.16
Deer Creek, .	Mooney's Flat.	2200	5 to 12	8.40

THE EXTENSION OF THE TUNNEL AND THE CONNECTION OF ITS HEADING WITH THE SURFACE.

When a tunnel is used to open a claim it should be driven well into the channel before any connection is made with the surface. The shaft which connects with the heading should be vertical.* Its size is to be determined by the requirements of the work, 4 x 4 feet or 5 x 9 feet in the clear, according to circumstances. Whilst raising from the tunnel due precaution should be taken against accidents arising from the rush of water, sand, and gravel, which is liable to occur when the bottom of a deposit is tapped.

Where a shaft 5′ x 9′ in size is sunk it should be divided into two compartments, one of which will serve as a man-way, and in the event of obstructions arising in the other compartment, this one can be used in removing them. There is some difference of opinion as to the use of vertical shafts; also as to the expediency of making direct connection between the shaft and tunnel. Respecting the former, it may be observed that a vertical shaft, when properly timbered, is the most desirable and economical to use for opening hydraulic claims. With drops 200 feet no difficulty in working has been experienced. As regards the direct connection of the shaft with the tunnel, where the work is well constructed no trouble or set-back will be encountered in adopting this method of mining. Where a tunnel has to be extended beyond the shaft, it is sometimes convenient to sink the shaft off to one side of the tunnel, connecting it by means of a short drift. In general, where an extension of the tunnel has become necessary, the shaft has been reduced to a drop-off of

* Occasionally inclines are used.

fifty or sixty feet, or bed-rock cuts have lowered it to a level, and consequently the tunnel as extended will diverge from the course of the main tunnel. This is especially the case when the main tunnel enters the channel, as is most usual, at an angle to its general direction.

THE TIMBERING OF THE SHAFT, ETC.

To avoid any accident or trouble, such as might be occasioned by caving of the shaft, it should be strongly timbered, closely lagged, and lined on the inside with two-inch lumber to within, say, eight feet of the surface. This top being the first washed off, is used for fall. When in soft rock, the shaft should be timbered close with timbers of the requisite size. These timbers are then lined on all four sides with blocks of wood from four to six inches in thickness set on the end of the grain.

The bottom of the shaft can be protected against wear by using pieces of heavy logs or sticks of twelve inches square timber, stood on end, securely bound together, or it can be paved with heavy stones, but in many cases the bare bed-rock only is used. The last fifty to seventy-five feet of the tunnel which connects with the shaft should be heightened from eight to twelve feet, and at their junction the ground should be securely timbered and protected.

With long tunnels it is advisable to sink a second shaft at a convenient distance from the heading. As a precautionary measure a man is sometimes placed in the tunnel to watch the runnings, and in such cases a second shaft is indispensable. Should an accident occur at the main shaft by its caving or closing up, the second shaft would also afford the necessary facilities for reopening the work.

FIRST WASHINGS THROUGH THE SHAFT.

When a claim is opened by means of a shaft, the first washings through it should be done with care, and the surface, within as great a radius as can be conveniently washed and drawn, should be cleared on all sides, before any descent is made by taking off the top timbers. Attempts to push this preliminary work have frequently caused an overcrowding of the shaft, resulting in its filling up or getting choked by caving. It is, therefore, essential that the gravel should be run so as to avoid the rush of material from caves; and to prevent the accumulation of rocks in the bottom of the shaft an excess of water should always be used.

THE GRADE.

The facility with which gravel can be moved by water depends mainly on the inclination which can be given to the sluices. The question of grade is, therefore, one of vital importance, and to carefully investigate and determine this question great care and skill are often required. When the topography of the country admits of unlimited fall, the grade or incline upon which the sluices are set should be regulated by the character of the gravel to be moved. Where the wash is coarse and cemented, requiring blasting, or where there is much pipe-clay, a heavy grade is requisite. Strongly cemented gravel requires falls or drops to break it up. To prevent the loss of gold, grizzlies* and undercurrents are used to relieve the sluices of the finer material containing gold already detached and being carried forward by a strong stream and heavy grade.

Experience so far has led to the adoption, in most localities, of what is called a six inch grade, meaning six inches to the box twelve feet long, or say 4 per cent. grade. In some places, where large quantities of pipe-clay are washed off, nine and twelve inch† grade to the box is used (6 to 8 per cent.), in others, on account of natural obstacles encountered, a 1½ per cent. grade, or 2½ to 3 inches per box of sixteen feet, is used.

Light gravel can be moved on an easier grade and with less water than heavy gravel, nevertheless when a 4 per cent. grade can be obtained it is desirable, as it lessens the labor of handling rocks. Moreover, as light gravel is generally poor in gold, this deficiency can only be made up by washing large quantities of it. On the other hand, coarse gravel demands from 4 to 7 per cent. grades, and a proportionate increase of water.

In washing heavy gravel, the water in the sluices should be deep

---

* "Grizzly:" where a drop-off can be made in a line of sluices, steel bars or pieces of railroad iron laid parallel, with spaces between them, are placed on the bottom across and in the end of the sluice, so as to discharge the boulders over an embankment, whilst allowing the finer material to pass between the bars and drop into the undercurrents. The grating formed by the bars is called a grizzly. "Undercurrents" are sluices, 15 to 20 feet wide and 40 to 50 feet long, set on a very slight grade (nearly flat), provided with riffles to catch the gold and amalgam. They are placed to one side, below the main sluice. See chapter by Charles Waldeyer, Raymond's Report, 1873, 415, 416.

† In Placer County, at some of the mines, the sluices have a grade from 15 to 24 inches per 12-foot box. NOTE.—Oro Consolidated, sluices, 2½ feet wide and 20 inches deep, grade 5 inches to 12 feet (or 10.41 per cent.), are calculated to run 700 miner's inches of water.

enough (10 to 12 inches) to cover the largest boulders ordinarily sent down, whilst light gravel requires the water to run in sufficient force to carry the rocks washed through the sluice, and yet be in only sufficient volume to prevent the packing of black and heavy sand. If too much water is used, by superincumbent pressure the sand drops and packs the riffles. The best results are obtained with shallow streams on light grades.

SETTING SLUICES AND THEIR CONSTRUCTION.

In setting sluices, a straight line should be adopted; and where curves occur, the outer side of the box is slightly raised, in order to cause a more general distribution of the materials over the riffles.

Sluices are made of 1½ inch plank, tongued and grooved, carefully fitted together so as to prevent any leakage, resting on sills 4 x 6 inches. The length of the sill depends chiefly on the width of the sluice; thus, a 4 foot sluice would require a sill seven feet long. To securely tighten the bottoms of the sluices, the planks should be grooved and then joined together by driving in a soft pine tongue.

The posts are 4 x 6 inch scantling, forming with the sills a frame, which is placed every four feet to receive the sluice. The posts are dovetailed into the sills, and are likewise strengthened with side braces connecting the ends of the sills and the posts together. The size of the sluice* is regulated by the grade, character of the gravel, and quantity of water to be used. A sluice six feet wide and thirty-six inches deep, on a 4 or 5 per cent. grade, will suffice for running 3000 to 3500 miner's inches† of water. One four feet wide, thirty inches deep, on a four inch grade to sixteen foot boxes, will suffice for 1200 to 1500 inches of water, and on a 4 per cent. grade it is large enough for 2000 inches. A sluice three feet wide and thirty inches deep, with a 1½ per cent. grade, is ample for 800 to 1000 inches.

The requisite length of the sluice is determined by the character of the gravel washed, volume of water used, the grade, and the size of the sluices, the principle being to construct the line sufficiently long to insure the most complete disintegration of the material, thus affording ample surface for the grinding of the cement, and offering under such conditions the best facilities for the gold to settle in the riffles.

---

* Double sluices are frequently used in large claims to advantage for continuous washings.

† Miner's inch, see further on in this article.

RIFFLES.

Square blocks of suitable length and breadth, 8 to 12 inches deep, called riffles,* arranged with spaces of 1 to 1½ inches between each cross row, are used to line the bottom of the sluices. They are held in position by small boards, 1½ x 6 inches, fastened crosswise on the bottom between the rows by means of headless nails, and made secure by a cleat, 1½ x 3 inches, nailed longitudinally on top of the blocks on both sides of the sluice. This method of setting riffles is falling somewhat into disuse. Block riffles are now frequently set and held firmly in position by means of soft pine wedges driven between the blocks and the sides of the sluice. When wedges are used it is necessary that the sides of the blocks should be square where they adjoin one another. A side lining is required in all sluices. In cement claims, blocks 4 inches thick, 18″ x 24″ in size, are used for side lining.

In many localities round stones instead of blocks are used for riffles, and where heavy cement† is washed these are considered preferable on account of their cheapness. At Smartsville they have been found to serve fully as well as the blocks, and are claimed to be cheaper. It must, however, be stated that they are more costly to handle, as longer time is required to clean up and repave the sluices when they are used. In some sections of the State longitudinal riffles are preferred, *i. e.*, riffles made of scantling placed lengthwise in the sluice. It is frequently the case that the several kinds of riffles are used in long sluices. Where the banks contain many large boulders, as at the Paragon Mine, a different style of riffle has been introduced. These riffles are made of 6 inch scantling, 1½ inches wide, 8 feet long, separated by blocks 1½ inches wide, and an iron bar, 1½ inches wide, 1 inch deep, and 8 feet long, is fastened on top of each scantling. The grade of these sluices is 18 inches per 12 foot box, and the width of sluice is 44 inches.

A system of riffles consisting of a row of blocks alternating with an equal section of rocks has been found to work successfully. This arrangement of the sluices materially reduces the wear and tear of

* The primitive riffles used by the South American gold-washers, consisted of steps cut in the bare bed-rock. Blankets and grass sods were also used to catch the gold. See detailed description of the gold-washings of Jaragua, Mawe's Travels, pp. 77–8.

† The term cement is applied to a conglomerate which is chiefly cemented together by ferric oxide.

the blocks, and has given excellent results. The block and rock riffles are not desirable for those sluices which have frequently to be cleaned up.

So far, experience shows square block riffles to be the best for saving gold. The objection to their use is the cost of wear and tear. Rocks are the most economical substitute, but sluices set with them require steeper grades and more water than those arranged with blocks. As a matter of convenience and economy, block riffles should be used in the head sluices of those claims where the gravel is rich, or where a large amount of gold is monthly produced and cleaned up.

CHARGING THE SLUICES.

When work commences, the sluices are run half a day in order to pack them. A few moments before the quicksilver is added, the water is run clear, and they are then charged. More quicksilver is added during the second and third days, the quantity being increased until the riffles hold the mercury at the surface. During the washings, the sluices are repeatedly examined and recharged. The amount subsequently added is regulated by the quicksilver exposed to view; the total quantity required is more or less dependent on the length of the run.

When charging the riffles all splashing of the quicksilver should be avoided. When it is sprinkled into the sluice (a practice to be condemned), it divides itself into minute particles, the bulk of which is easily carried off by the swift stream, while portions of it will even float in the clear water. The buoyancy of these small particles is very considerable.

Float quicksilver, containing gold particles,* has been taken from off the surface of the water 20 miles from where the amalgam entered the stream. An instance of floating amalgam was observed on the north fork of the Yuba River. At a point four miles below where tailings were dumped, a flume (conveying water to a pump) was set 10 feet above the bottom of the stream drawing direct without any dam. An examination of the flume subsequent to its removal revealed the presence of about 1 oz. gold amalgam, collected at the junction of the boxes.†

* The gold particles were microscopic.

† This occurred in 1864. The flume was owned by Mr. Banks of San Juan, Nevada County.

LOSS OF QUICKSILVER.

In hydraulic mining a loss of quicksilver cannot be avoided, the amount lost depending on the character of the gravel washed, the quantity of water used, the grade, length, and condition of the sluices, and on the number of days run. The use of a long line of sluices, kept in good order, and the employment of undercurrents, tend to diminish it.

The aggregate amount of quicksilver lost at the La Grange Hydraulic Company's mines during a period of two and one-half years in running six claims 1520 days* (24 hours), washing and moving 2,275,967 cubic yards of gravel, and using 1,533,728 inches of water (2159 cubic feet each), amounted to 553.75 lbs. quicksilver. The North Bloomfield claims, for the year ending November 3d, 1875, used 464,600 miner's inches of water,† and 9649 lbs. of quicksilver were employed in the sluices. The loss of quicksilver at the respective claims was as follows:

Name of claim.	Miner's inches used.	Length of sluice.	Loss of quicksilver.	Per cent.
		Feet.	Lbs.	
No. 8, ...	386,972	1800	900	11
Woodward, ...	51,550	600	217	25
Eisenbeck, ...	26,000	400	125	25

The losses at the Woodward and Eisenbeck claims are attributed to old and poor sluices and steep grade. For the year ending October 31st, 1876, the loss of quicksilver at the above-mentioned claims was as follows:

Name of claim.	Miner's inches used.	Length of sluice.	Loss of quicksilver	Per cent.
		Feet.	Lbs.	
No. 8, ...	700,000	1800	2251	
Woodward, ...	30,000	600	123	
Eisenbeck, ...	56,200	400	182	

THE LOSS OF GOLD.

The loss of quicksilver would seem to involve a loss of gold, but

* The aggregate number of days' work of all the claims.

† Each of these inches discharged 2.230 cubic feet of water per 24 hours.

it is practically impossible to determine to what extent this is the case. There are many conflicting opinions as to the amount of fine floured and "rust" gold lost in hydraulic mining, but in properly constructed sluices the already known appliances, when used, save all that can at present be economically and profitably caught.

In substantiation of this can be cited the work done at Gardner's Point during the last four years. The number of inches of water used at this claim during this period is not known. The number of cubic yards of gravel moved has been approximated from the best obtainable data and an inspection of the property. From 1872–74 inclusive, about 148,000 cubic yards of dirt were moved. In 1875 the claim was only run fourteen days full time. This year (1876) 40,000 cubic yards of gravel and 260,000 cubic yards of lava ashes were washed off. The gross yield from 1872–76 was $140,000. The number of cubic yards of gravel moved during the corresponding time is sufficiently large to warrant the conclusion that the present known appliances for catching gold are adequately effective.

THE RESULT OF WORKING TAILINGS AT GARDNER'S POINT.

The tailings from all these washings were caught and confined in a ravine situated a short distance below the claim. The length of the sluice through which the gravel passed was 1373 feet, with three undercurrents. This year the ravine, supposed by many to be exceedingly rich, was cleaned up on joint account by Chinese, under special engagement with the owners, and its gross yield was $1168, not 1 per cent. of the total receipts from the washings.

ON THE DISTRIBUTION OF GOLD THROUGHOUT THE SLUICES.

In cleaning up sluices, the largest proportion, approximating 80 per cent. of the gold caught, is found in the first 200 feet of the head of the sluices.* The gross yield of the Gardner's Point claims for the season of 1874 was $68,000 for 100 days' run. Of this amount $54,000 was obtained in the first 150 feet of the sluices, and $3000 taken from the undercurrents. The remainder was found

* Mr. P. Wright, Assistant Engineer for Water Supply, Beechwood District, giving his experience on this subject, says: "With a sluice 12 inches wide on an incline of 1 foot to 48 feet, using 600 gallons per minute, I have found 95 per cent. of the gold within three feet of where the gravel was filled into the sluice—where the gold was lying upon a smooth board, and yet a powerful current failed to move it."—*The Gold Fields and Mineral Districts of Victoria*, R. Brough Smyth, p. 183.

lower down along the sluices. The first undercurrent was 790 feet distant from head of the sluice, and yielded 50 per cent. of the total yield of the undercurrents. The second undercurrent was 78 feet distant from the first, with a drop of 40 feet between them, and it contained 33 per cent. of the gross undercurrent yield. The third undercurrent was 91 feet distant from the second undercurrent, with a drop of 50 feet between them. Its yield was nearly $500.*

It sometimes happens that a hundred or hundred and fifty feet at the head of a sluice are covered with gravel during the greater part of a run. In such cases, the gold is found so much further down the sluice. In the North Bloomfield tunnel, the upper 300 feet of the sluice is generally filled with gravel, from 1 to 5 feet deep, and still this portion yields much more amalgam per linear foot than the next 300 feet of sluice below.

From the report of this company for the year ending October 31st, 1876, the following data and facts are worthy of note, as showing the position of the gold as cleaned up in the sluices at No. 8 claim, where some 700,000 inches of water were run, washing 2,919,000 cubic yards of gravel:

Sump, . . .	$1,510 00	.80	per cent. of gross yield.
Flume (1800 feet),	176,900 73	92.00	" " "
Tunnel below flume,	7,290 00	3.75	" " "
Tail sluice (300 feet),	1,800 00	.95	" " "
Undercurrents, .	5,235 00	2.50	" " "
	$192,735 73	100.00	

THE DISTRIBUTION OF GOLD IN TAIL SLUICES.

The North Bloomfield tunnel (8000 feet in length) has 1800 feet of sluices, paved with blocks, at its upper end, but in the succeeding 6200 feet no sluices are used, the tailings being allowed to run on the bare bed-rock (a tough slate).

From the rock cut at the mouth of the tunnel a sluice paved with rocks receives the tailings. From here on they are carried through sluices and cuts, distributing them over undercurrents set on different grades, paved in some instances with rocks and blocks, and occasionally arranged with longitudinal riffles covered with strap iron. The grizzlies used are made of wrought iron one by four inches in size, set on edge.

* The figures showing the yield of the undercurrents were calculated from the amalgam.

The discharge from the several undercurrents is taken up by the main sluice, and subsequently redischarged over the succeeding undercurrents, till the lowest sluice and undercurrent finally discharge the tailings into the cañon. From December 1st, 1876, to June 1st, 1877, three hundred and fifty thousand (350,000) twenty-four hour miner's inches of water (2230 cubic feet each) conveying the tailings passed through the tunnel, and were discharged through the tail sluice and undercurrents.

The annexed sketch shows the general arrangement of the tail sluices and undercurrents, which latter were subdivided into compartments as shown.

The distribution of the gold along the line of sluices and in the several undercurrents was as follows:*

ARRANGEMENT OF TAIL

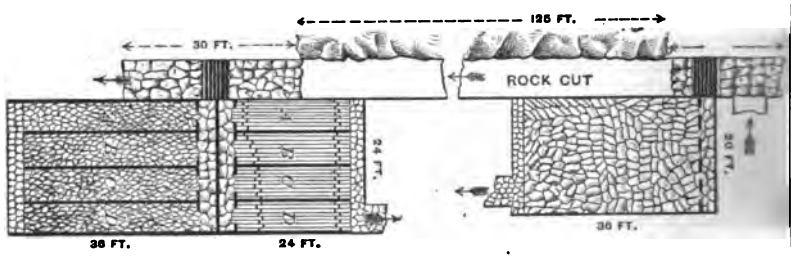

No. 6.—Rock riffles. Grade 17 in. per 12 ft.

No. 5.—Rail riffles. Grade 12 in. per 12 ft.

No. 4.—Rock riffles. Grade 12 in. per 12 ft.

TAIL SLUICE, ETC., FROM DECEMBER 1ST, 1876, TO JUNE 1ST, 1877.

Miner's inches of water, 24 hours each, ...	350,000
150 feet at head down to No. 1 undercurrent, yield, ...	$3150 00
" remainder of sluice, ...	350 00
Total, ...	$3500 00†

No. 1 Undercurrent.—Size, 24 by 36 feet; grade, 13 inches to 12 feet; chute, 2 feet wide at opening, contracted to 10 inches; iron rail riffles.

* I am indebted to Mr. H. C. Perkins, Superintendent N. B. G. M. Co., for the data given. The results show the total yield of the many places, the number of "clean ups" made being noted in each case.

† 700,000 miner's inches water were used in 1875–6; the yield was $1800.

A	yielded	108½ oz.	amalgam.	3 clean ups.
B	"	83¾ "	"	
C	"	46½ "	"	
D	"	81½ "	"	
Chute	"	46¼ "	"	
		816¼ oz.	. . .	$1920

No. 2 Undercurrent.—Size, 24 by 24 feet; grade, 12 inches to 12 feet; chute, upper end 2½ feet, lower end 2 feet; iron rail riffles.

A	yielded	48¾ oz.	amalgam.	2 clean ups.
B	"	36½ "	"	
C	"	20¾ "	"	
D	"	23½ "	"	
Chute	"	14 "	"	
		143¼ oz.	. . .	$874

SLUICES AND UNDERCURRENTS.

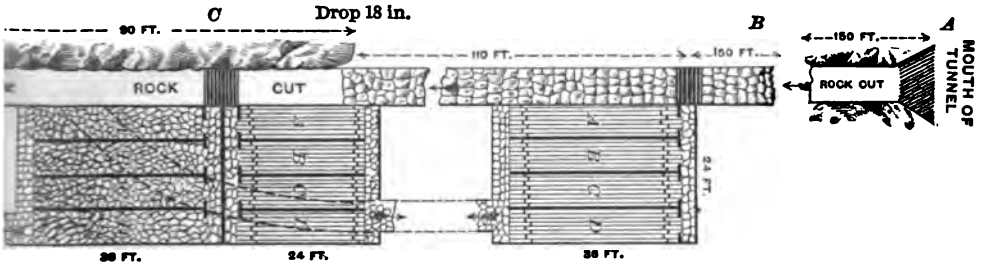

No. 3.—Rock riffles. Grade 15 in. per 12 ft.

No. 2.—Iron rail riffles. Grade 12 in. per 12 ft.

No. 1.—Iron rail riffles. Grade 13 in. per 12 ft.

No. 3 Undercurrent.—Size, 24 by 36 feet; grade, 15 inches to 12 feet; chute, 2½ feet upper end, 2 feet lower end; rock riffles.

A	yielded	50½ oz.	amalgam.	2 clean ups.
B	"	35¼ "	"	
C	"	18½ "	"	
D	"	16 "	"	
Chute	"	8½ "	"	
		128¾ oz.	. . .	$888

No. 4 Undercurrent.—Size 20 by 36 feet; grade, 12 inches to 12 feet; rock riffles.

71¾ oz. amalgam, . . . $430

No. 5 Undercurrent (constructed in March).—150,000 miner's inches of water; size, 24 by 24 feet; grade, 12 inches to 12 feet; chute, 2½ feet upper end, contracted to 2 feet lower end. Riffles, 1¼ by 4 inches lumber, covered with strap iron, rails 1 inch apart.

A	yielded	5	oz. amalgam.	1 clean up.
B	"	8½	" "	
C	"	5	" "	
D	"	6½	" "	
		25 oz.	. . .	$150

No. 6 Undercurrent.—Size, 24 by 36 feet; grade, 17 inches to 12 feet of rock riffles; chute, 2½ feet upper end, 2 feet lower end. 150,000 miner's inches of water.

A	yielded	8	oz. amalgam.	1 clean up.
B	"	5	" "	
C	"	8¼	" "	
D	"	3	" "	
		19¼ oz.	. . .	$115

The total yield of the undercurrents and tail sluices for the period mentioned was $7872, whilst the total yield of the claims was $145,000.

The amalgam from the main sluice is worth from $7.50 to $8.50 per ounce troy, whereas that of the undercurrents varies from $6 to $6.20 per ounce troy.

The result of the undercurrents and tail sluice "clean ups," for the year 1876–7, was as follows:

	Yield.		
Cut A to B . . .	334	ounces	amalgam.
Tail sluice, B to C . .	1380½	"	"
Undercurrent, No. 1, .	648¾	"	"
" No. 2, .	280¾	"	"
" No. 3, .	253¾	"	"
" No. 4, .	143¾	"	"
" No. 5, } 6 mos.	69	"	"
" No. 6, }	59	"	"
Total in cañon, . .	3170	ounces	amalgam.

This amount (3170 ounces) equals in value about seven per cent. of the total yield of the mine for this last fiscal year, during which period 595,500 miner's inches of water have been used extracting $291,116$\frac{90}{100}$ gold.*

* The cost of melting and refining has been deducted from the amount given.

Comparing these final results with those of the previous year, 1875–6, the precious metal is found distributed throughout the sluices and undercurrents in the same relative proportion.

This fact is worthy of note since last year the bulk of the material moved was "top gravel," whilst this season a much larger proportion of cement gravel has been run through the sluices.

In the heavy cement at French Corral and Manzanita a high percentage of the gross yield of the mines is found in the undercurrents.

Hydraulic mining in the so-called "cement claims" is carried on under great difficulties. An exhibit of the workings of the sluices of a representative cement claim (French Corral) is here given, and the contrast thus afforded with the workings of sluices in the generality of cases is most striking and especially interesting.

The washings from the French Corral Mine, after passing through the new tunnel, are distributed successively over nine undercurrents before they are finally discharged. The sizes and arrangement of these undercurrents are given in the accompanying table.

FRENCH CORRAL MINE, UNDERCURRENTS, ETC.

UNDERCURRENTS.						SECONDARIES.			CHUTES.	
From mouth of tunnel down.	No. of boxes.	Length over all.	Width of two compt's in cuts.	Grade, whole amount.*	Bottom lined with.	Length.	Width.	Grade.	Length.	Width.
		Feet.	Feet.	Ft.In.	4" blocks.	Feet.	Feet.	Ft.In.	Feet.	Feet.
No. 1	3	42	20	3.9	6"x12"x4"				Main sluice.	5
" 2	3	42	20	3.9	W. side. E. side. Blocks. 1 bx blocks. do. 2 bx riffles.	21	12	1.10½	42	6
" 3	3	42	20	3.9	Upper box, each side.† 2d blocks. 3d riffles.				28	6
" 4	3	42	20	3.9	Same as No. 3.				28	6
" 5	3	42	20	3.9	" "				42	6
" 6	3	42	20	3.9	" "				28	6
" 7	3	42	20	3.9	" "	21	12	1.10½	42	6
" 8	3	42	20	3.9	" "				28	6
" 9	3	42	20	3.9	" "	28	12	2.6	28	6

From January 14th, 1877, to October 3d, 1877, there were 163,263 miner's inches of water discharged over these undercurrents,

* Grade fifteen inches to fourteen feet.

† Riffles, made in frames seven feet long, twenty inches wide, from slats 1¼" x 4", ¾" apart. The bottoms of the undercurrents were lined with slat riffles, until clean up of July 21st.

and the corresponding yield of the washings was $201,784$\frac{36}{100}$ gold, seventeen and one-half (17½) per cent. of said amount being found in the undercurrent distributed in the following proportions:

YIELD OF THE UNDERCURRENTS, ETC., AT THE FRENCH CORRAL MINE.

AMALGAM YIELD IN LBS. AVOIRDUPOIS.															
UNDERCURRENTS.										SECONDARIES.			Pickings from chutes and aprons.	Total yield.	Per ct. of total gross yield of the mine.
Nos.	1	2	3	4	5	6	7	8	9	1	2	3			
Lbs.	96	67½	56¾	42	31	24½	23¼	17	12¾	5½	1¾	1	9½	388½	17.5

As further illustrative of the distribution of gold in the sluices of hydraulic claims, a classified statement is here added, showing the workings of the sluices at the Manzanita Mine in Nevada County, California.

THE MILTON MINING AND WATER COMPANY.

Statement showing the relative yield of the sluices at the Company's Manzanita Mine from December 20th, 1876, to October 3d, 1877.

Date of clean up.	Total amount of water used in run 24 hours, miner's inches.	AMALGAM YIELD IN LBS. AVOIRDUPOIS.									Total.	Bullion Yield.
		Cut.	Tun'l.	LONG SLUICE BY SECTION.						Und'rcur'nts		
				1	2	3	4	5	6			
January 4, .	8,626	18	48	16						8	90	$7,734.87
March 17, . .	25,937	37	103							30	170	15,970.53
April 23, . .	21,491	51	89½					49		30½	220	20,238.51
June 8, . . .	29,187	46	78				83½			34¼	241¾	21,562.47
July 13, . . .	15,868	64	53½	32						8½	157½	15,401.70
August 9, . .	17,000	33¼	66			37¼				17½	154	15,970.53
September 29,	23,400	104	124	15	109		28	38	64	44	526	*46,307.19
From top mine worked in March and May	16,985										40¾	3,222.41
Total, . . .	158,494	353¼	561½	63	109	37¼	111½	87	64	172¾	1600	$146,408.21

* Bar of October 26th, valued at $5800.

The arrangement of the sluices at the Manzanita Mine is as follows:

1st.	East cut contained, average,	40 boxes.*	
	West, " "	28	"
2d.	Tunnel, " "	120	"
3d.	Long sluice, "	300	"
4th.	Undercurrents, { 8 to commence, 10 at end. } average,	50	"
	Total,	588	"

The long sluice is divided into six sections, each section containing the following number of boxes:

1st	section,	29	boxes,	to second angle below tunnel.
2d	"	56	"	Pease Ravine.
3d	"	23	"	Buckeye Point.
4th	"	67	"	Armstrong Ravine.
5th	"	62	"	Quinn's.
6th	"	63	"	Lower.

The sluices in the cut are four feet in width, while those in the tunnel and the long sluice are five feet wide, all of them having a side lining of blocks three inches thick. The riffles used in the cut sluices are hand-sawed blocks $13\frac{1}{2}'' \times 13\frac{1}{2}'' \times 10$ inches, and those in tunnel sluices are hand-sawed blocks $13\frac{1}{2}'' \times 13\frac{1}{2}'' \times 10$ inches, and $17\frac{1}{2}'' \times 17\frac{1}{2}'' \times 10$ inches, about half of each. In the long sluice quarried granite rocks sixteen inches thick (now eighteen inches thick) are substituted for block riffles.

The grade along the line of the cut and tunnel is seven inches to fourteen feet, whilst that of the long sluice averages nine inches to fourteen feet.

The undercurrents (ten in number) are similar to those used at the French Corral Mine. They are 42 feet long (the apron over which the water is spread forms a part), 20 feet wide, set on grades ranging from $13\frac{1}{2}$ inches to 16 inches per box, and are paved with blocks 6 in. x 17 in. x 4 in. in size.†

THE SAVING OF GOLD—FINE GOLD.

The most efficient means of saving gold from cement gravel are by a liberal use of the best shattering powder, breaking the cement before it is washed into the sluices, and by the introduction of

* Each box fourteen feet in length.

† The statements of yield of the French Corral and Manzanita mines are condensed from the official returns of the Milton Mining and Water Company.

several "drops," when possible, along their line. Frequent drops and short lines of sluices give better results than one long continuous line of sluices. Gravel moving in sluices is subjected to a grinding and scouring process, which alone is not sufficient to disintegrate the cement gravel except at considerable cost.

As regards the saving of fine gold, it may be stated that the lessening of grades and the use of undercurrents tend to diminish the losses. Extensive lines of sluices and undercurrents are expensive to build and keep in repair. Like the last concentrator, so the last undercurrent will always catch some metal. So long as the knowledge of the quantity of gold in gravel banks remains as imperfect as it is at present, the simple and well-known appliances now in use are the most convenient and economical, and the excuse so often given for small yields, namely, loss of microscopic gold and bad sluices, can be set down by the capitalist as one of the preliminary indications of a bad investment.

MEASUREMENT OF WATER.

The miner's inch is an arbitrary measurement of water, established in early days by the miners in the different camps, in accordance with the laws they adopted. The miner's inch, as accepted in some districts, is an amount of water discharged from an opening one inch square through a two-inch plank, with a pressure of six inches above the opening.

The Smartsville inch is calculated from a discharge through a four-inch orifice, with a seven-inch board-top; that is to say, the pressure is seven inches above the opening; or nine inches from its centre. The bottom of the aperture is on a level with the bottom of the box, and the board which regulates the pressure is a plank 1 inch thick and 7 inches deep. Thus an opening 250 inches long and 4 inches wide, with a pressure of 7 inches above the top of the orifice, will discharge 1000 Smartsville miner's inches. Each square inch of the opening will discharge 1.76* cubic feet per minute, which approximates the discharge per inch of a two-inch orifice through a three-inch plank, with a pressure of 9 inches from the centre of the opening, the said discharge being 1.78 cubic feet per minute. The Smartsville miner's inch will discharge 2534.40 cubic feet in 24 hours, though in that district the inch is only reckoned for 11 hours.

* Determined by Mr. Thurston.

The miner's inch of the Park Canal and Mining Company, in El Dorado County, discharges 1.39* cubic feet of water per minute. The inch of the South Yuba Canal Company is computed from a discharge through a two-inch aperture, over a one and a half inch plank, with a pressure of 6 inches from the centre of orifice.

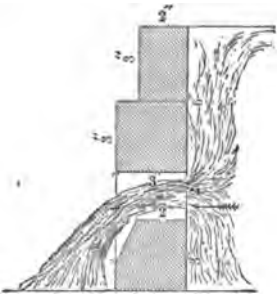

At the North Bloomfield, Milton, and La Grange mines, the inch has been calculated from a discharge through an opening 50 inches long and 2 inches wide, through a three-inch plank, with the water 7 inches above the centre of the opening.

To determine the value of this miner's inch, a series of experiments were made at Columbia Hill, lat. 39° N., elevation 2900 feet above sea-level. The module used was a rectangular slit 50 inches long and 2 inches wide, pressure 7 inches above the centre of the opening. The discharge was over a three-inch plank, the last inch chamfered, as shown in the sketch. The size of the opening was taken with a measure (micrometer attached) which had been compared with and adjusted to a standard United States yard. Time was read to one-fifth of a second. The level of the water (drawn from a large reservoir) was determined with Boyden's hooks, micrometer adjustment. The following results were obtained:

1 miner's inch will discharge in	1 second . .	.2624	cubic feet.
" " "	1 minute .	1.5744	"
" " "	1 hour . .	94.4640	"
" " "	24 hours . .	2267 1360	"

Ratio of actual to theoretical discharge, 61.6 per cent. These figures are within the limit of 1-500 possible error.†

A series of experiments made last summer at La Grange, to determine the effective value of the above-described inch, gave the following results:

1 miner's inch discharged in	1 second . .	.2499	cubic feet.
" " "	1 minute .	1.4994	"
" " "	1 hour . .	89 9640	"
" " "	24 hours . .	2159.1460	"

Ratio of effective to theoretical discharge, 59.05 per cent. ‡

---

* Estimated by J. J. Crawford, M. E.

† Experiments were made in 1874 by H. Smith, Jr.

‡ These results are the average of a series of experiments made by the writer.

DITCHES.

Before describing the *modus operandi* of hydraulic washing, a few remarks on the water-supply system of the gold mining regions will not be inappropriate. Thousands of miles of ditches have been built throughout the State for the purpose of conveying water to the mines, and in some instances are now being used likewise for irrigation.

The use of steep grades for running water, the construction of high flumes, and the successful introduction and use of wrought iron pipes, are all due to hydraulic mining.

In locating mining ditches, the following rules or principles should be observed:

1. The securing of an abundant and permanent supply of water, particularly during the summer months.

2. That the source of supply be at a sufficient elevation to cover the greatest range of mining ground at the smallest expense, hydrostatic pressure being always desirable.

3. The snow line, when possible, should be avoided, and the line should be located so as to have a southern exposure, particularly in the snow regions.

4. All watercourses on the line of the ditch should be secured. Their supply partially counteracts the losses by evaporation, leakage, and absorption, and frequently furnishes an additional quantum of water during several months of the year.

5. Waste-gates, at proper intervals, should be arranged so as to discharge the water, when necessary, without risk of damage to the ditch.

6. Ditches, when practicable and the cost not excessive, should always be preferred to flumes.

Among the principal ditches constructed in the State are the North Bloomfield, the Milton, the Eureka Lake, San Juan, the South Yuba Canal, Excelsior or China Ditch, Bouyer and Union, El Dorado, Cherokee and Spring Valley, Hendricks, and La Grange.

The North Bloomfield main ditch, including distributers, is 55 miles long. Its size is 8.65 feet on top, 5 feet at bottom, and 3½ feet deep. The ditch and distributers cost $422,106.22. Its grade is from 12 to 16 feet per mile, discharging 3200 miner's inches. The Milton Company's ditches are 100 miles long, and their average grade is from 12 to 25 feet to the mile. The size of the main ditch is 4 feet on bottom, 6 feet on top, and 3½ feet deep, discharging 3000

miner's inches. Cost, $259,020.14. The Eureka Lake Ditch is 18 miles long, and has a capacity of 2500 miner's inches. Its cost, including water rights and flumes, was $430,250. The San Juan

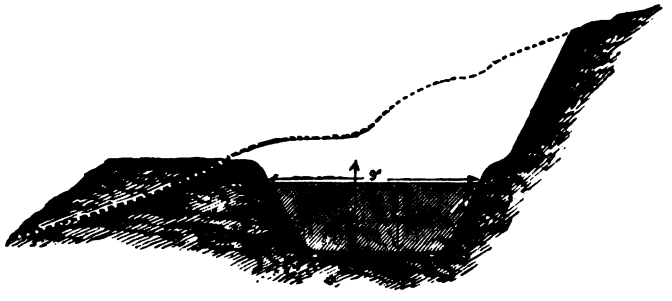

La Grange Ditch.

ditch and branches extend some 45 miles in length. The main ditch is 32 miles long, and its capacity is 1300 miner's inches. Their cost was $293,092. These two last-mentioned ditches belong to the Eureka Lake and Yuba Canal Company.

The main ditch of the South Yuba Canal Company (from the head to Bear River is 1½ miles long) is 6 feet wide on top and 5 feet deep, with a grade of 13 feet per mile. Its present capacity is said to be 7000 miner's inches of water. From Bear Valley (the junc-

North Bloomfield Main Ditch.

tion of the main and Dutch Flat ditches), the size of the canal for the succeeding 31½ miles, is 6 feet wide on top, 4½ feet deep, with a grade of 8 feet to the mile. The Dutch Flat Ditch is 13 miles long. Its size is 6½ feet on top, 4 feet deep, and has a grade of 13⅓ feet per mile. The capacity of this ditch is 3150 miner's inches of water. The Chalk Bluff Ditch is 6 feet wide on top, and 5 feet deep, with a

grade of 16 feet per mile, and has a capacity of 4100 miner's inches. The several ditches, etc., owned by the South Yuba Canal Company, have an aggregate length of 123 miles. The Excelsior or China Ditch, at Smartsville, is 33 miles long. Size, 5 feet bottom, 8 feet on top, and carries 4 feet of water. The grade is 9 feet to the mile, and the ditch discharges 1700 Smartsville miner's inches. The Bouyer and Union ditches are each about 15 miles long. Size, 4 feet on bottom, 8 feet on top, carrying 3½ feet of water. Their grades are 13 feet to the mile, discharging each 1200 Smartsville miner's inches. There are several minor ditches which deliver water in and around Smartsville. The total capacity of all the ditches is 5000 Smartsville miner's inches, and the whole investment in this class of property, in this locality, approximates $1,200,000.

The Spring Valley and Cherokee Ditch is 52 miles long, and has 3½ miles of iron pipe, 30 inches in diameter. The size of the ditch averages 5 feet wide, 3½ feet deep, discharging about 2000 inches of water.

The Hendricks Ditch,* in Butte County, is 46½ miles long; grade of the upper line of ditch, 12.8 feet per mile; grade of the lower line, 6.4 feet per mile; dimensions, 5 feet wide, 2 feet deep. Total cost, including Glen Beatson Ditch and Oregon Gulch Ditch, $136,150.

The La Grange Ditch,† including Patricksville branch, is over 20 miles in length. Size, 9 feet on top, 6 feet bottom, 4 feet deep.

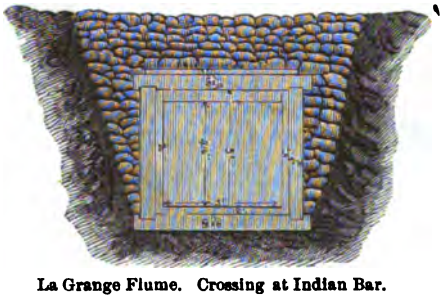

La Grange Flume. Crossing at Indian Bar.

Grade from 7 to 8 feet to the mile. The greater part of the ditch is cut in granite, and in places there are solid walls 50 to 70 feet

* See Raymond's Report, 1873, pp. 73, 74.

† The original ditch, about 19 miles long, is said to have cost $375,000. Since its completion, the Patricksville Ditch and reservoir have been built at a cost of $75,000.

high, built of stone. It discharges 2700 miner's inches of water, and its cost to date is about $450,000.

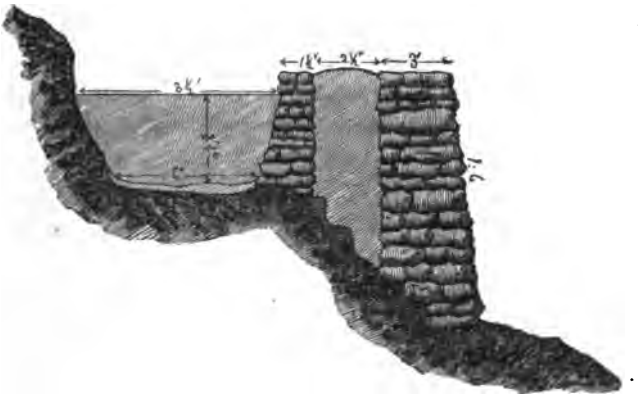

Section of Wall Ditch on Line of La Grange Mining Company's Ditch.

GENERAL OBSERVATIONS.

Ditches in California with carrying capacities as large as eighty cubic feet per second have been built, and are now in successful operation, with grades of from sixteen to twenty feet per mile. In a mountainous country, where steep grades can be generally obtained by a slight increase in the length of the canal, and where the cost of excavation is large, a great saving can be effected by using the smallest-sized canals and aqueducts practicable to carry the given quantity of water, or, in other words, by running water rapidly through a small channel rather than slowly through a large one. It is found to be safer and more economical, on account of the deep snows and terrific storms which rage in the mountains during the winter, to run and maintain in repair narrow and deep ditches on heavy grades than broad ones with light grades. The experience of the ditch-builders in this State has been highly favorable to these steep grades, but little trouble being caused by the washing of the banks due to high velocities.* In the valleys with ashy soil such grades, of course, would not be practicable.

---

* These narrow ditches with steep grades do not discharge within 25 to 30 per cent of the amount of water given by the formulæ for "the discharge of water in canals."

FLUMES, AND THEIR CONSTRUCTION.

In crossing ravines, flumes of wrought iron pipes are used. Many miners object to flumes on account of their continual cost and danger of destruction by fire. Where practicable they are set on heavier grades than ditches, 30 to 35 feet per mile, and are consequently of proportionately smaller area than the ditches. In their construction a straight line is the most desirable. Curves, where required, should be carefully set, so that the flume may discharge its maximum quantity. Many ditches in California have miles of fluming. The annexed sketch will show the ordinary style of construction.

The planking ordinarily used is of heart sugar-pine, 1½ to 2 inches thick, and 12 to 18 inches wide. Where the boards join, pine battens, 3 inches wide by 1½ thick, cover the seam. Sills, posts, and caps support and strengthen the flume every four feet. The

Sketch of Flume.

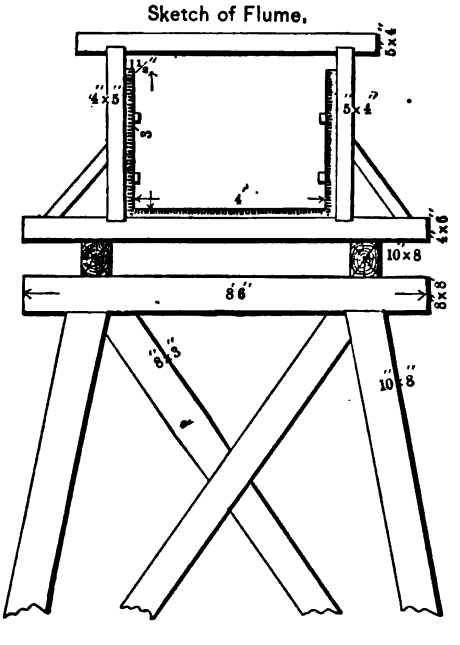

posts are mortised into the caps and sills. The sills extend about twenty inches beyond the posts, and to them side braces* are nailed to strengthen the structure. This extension of the sill timbers

* Side braces and the extra extension of the sill are, in many cases, only an unnecessary expenditure of money.

affords a place for the accumulation of snow and ice, and in the mountains such accumulations frequently break them off, and occasionally destroy a flume.

To avoid damage from slides, snow and wind storms, the flumes are set in as close as possible to the bank, and rest wholly or partially on a solid bed, according as the general topography and costs will admit. Stringers running the entire length of the flume are

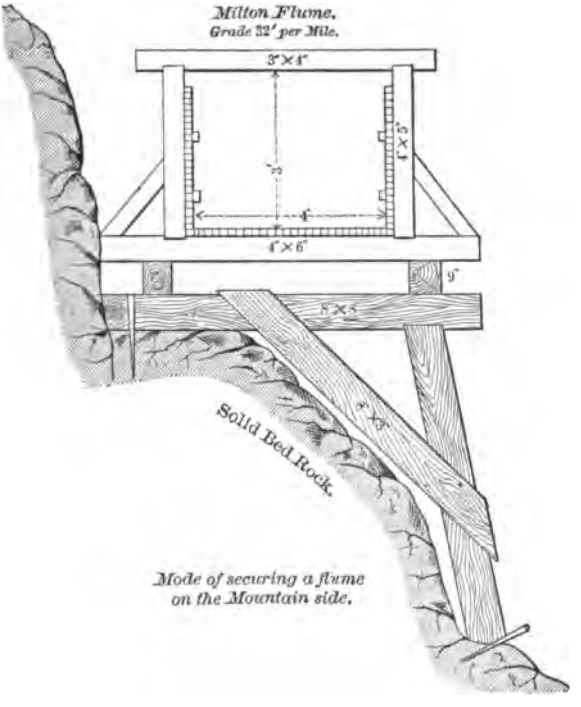

The details of the cost and construction of this flume are to be found in *Raymond's Report*, 1875.

placed beneath the sills just outside of the posts. They are not absolutely necessary, but in point of economy are most valuable, as they preserve the timbers. As occasion may demand, the flume is trestled, the main supports being placed every eight feet. The scantling and struts are used in accordance with the requirements of the work.

WROUGHT IRON PIPES.

The use of sheet iron pipes for conveying water in large quantities originated with the hydraulic miner. Their insignificant weight, coupled with their great strength (tensile), admirably adapted them to the service for which they have been employed.

The general sizes of the pipes used in the mines are 40, 30, 22, 15, and 11 inches in diameter, of riveted light sheet iron, No. 16, 14, or 12 iron, Birmingham gauge, made in lengths of about 20 feet, and put together in stovepipe fashion, neither rivets nor wire being used to hold the joints in place. These pipes are light and can be readily and cheaply moved; this in hydraulic mining is of great importance, as it is often requisite to change the position of the lines of pipe. Pipe put together in this rough manner will remain tight when subjected to even as great a pressure as 200 lbs. to the square inch. Where the pressure requires it, lead joints are used. (See sketch.) *A* represents the pipe; *B* an iron sleeve, between which and the pipe the lead, represented by dotted lines, is poured; *C* is a flange bolted to one length of the pipe on the inside, for the other pipe to fit over, as shown.

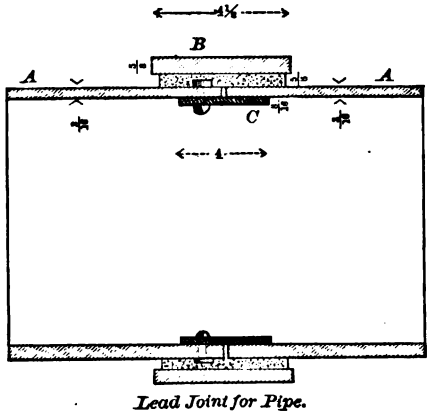

Lead Joint for Pipe.

Though roughly constructed and of very light iron, this kind of pipe (connected more like stovepipe than water-pipe), is found in practice to be most serviceable, and from its form, floating particles of matter readily render it water-tight. Such a pipe, 12 inches in diameter, made of No. 18 iron, is riveted in the longitudinal seams every inch to inch and a quarter; whilst in the round seams the

rivets, which are only $\frac{1}{8}$ of an inch in diameter, may be as much as 3″ apart, showing daylight between the iron; but after the water has run through the pipe a short time nearly all leaks stop. If necessary, however, two or three bags of sawdust put in the inlets, and a few shovelfuls of earth, will usually make everything tight.

This class of pipe is now being replaced by one of better make, in which the round seams are made with rivets $\frac{3}{4}$ of an inch apart, and the longitudinal seams are double riveted, with rivets 1 inch apart in the row, and with about $\frac{1}{2}$ inch apart from one row to the other. If riveted with care, such pipes, after being dipped in an asphaltum bath, are excellent, and will last for many years.

For this asphaltum bath the following preparation can be used:

Crude asphaltum,	28 per cent.
Coal tar (free from oily substances),	72 "

Or,

Refined asphaltum,	16½ per cent.
Coal tar (free from oily substances),	83½ "

When the mass has been boiled to a proper consistency, and by test the coating is found to be brittle, it at once indicates that the mixture has been boiled too hot, or that there was too much oil in the tar or asphaltum.

THE THICKNESS OF THE IRON, RIVETS, ETC.

The thickness of the iron is usually proportionate to the head of water and the diameter of the pipe. Pipes made of the different sizes iron here mentioned will stand the following strain per sectional inch.

No. of Iron.	Made to stand strain per sectional inch, lbs. Avd'p.
12,	7000 to 9000
12 to 9,	9000 " 12,000
9 " $\frac{3}{16}$ inch,	12,000 " 14,000
$\frac{1}{4}$ inch to $\frac{3}{8}$ inch,	17,000 " 18,000

The head of the water in pounds avoirdupois, multiplied by the diameter of the pipe in inches and divided by the above coefficients, gives twice the thickness of the iron to be used. Allowance must be made for the security required, that is, if the breakage of the pipe will cause much damage it is advisable to lower the margin for greater safety.

The diameter of the rivets usually used are:

No. 18.	No. 16.	Nos. 14, 12, 11.	Nos. 10, 8, 7.	No. $\frac{1}{4}$.	No. $\frac{5}{16}$.	No. $\frac{3}{8}$.
$\frac{5}{32}$ in.	$\frac{6}{32}$ in.	$\frac{5}{16}$ in.	$\frac{3}{8}$ in.	$\frac{1}{2}$ in.	$\frac{5}{8}$ in.	$\frac{3}{4}$ in.

They are usually spaced to make the pipe tight, that is, closer than is necessary for the strength of the seam; but this in turn is governed by the pressure on the pipes.

Table showing usual distance of rivets for corresponding thickness of iron. Items relating to a 22 inch wrought iron pipe.

Thickness of the iron used.	Diameter of the rivets.	Length of the rivets.	Pitch of the circle seams	Number of rivets in each circle seam.	Pitch of the rivets in the longitudinal seam or double row.	Width between the centres of the rivets in the double row.
No. 12	$\frac{5}{16}$ in.	$\frac{3}{4}$ in.	1 in.	69	$1\frac{3}{8}$ in.	$\frac{5}{8}$ in.
" 11	$\frac{5}{16}$ in.	$\frac{3}{4}$ in.	1 in.	69	$1\frac{3}{8}$ in.	$\frac{5}{8}$ in
" 9	$\frac{3}{8}$ in.	$1\frac{1}{16}$ in.	$1\frac{3}{16}$ in.	59	$1\frac{7}{16}$ in. full.	$\frac{3}{4}$ in.
$\frac{3}{16}$ in.	$\frac{1}{2}$ in.	$1\frac{1}{4}$ in.	$1\frac{7}{16}$ in.	39	$1\frac{1}{16}$ in. full.	$1\frac{1}{16}$ in.
$\frac{1}{4}$ in.	$\frac{1}{2}$ in.	$1\frac{1}{2}$ in.	$1\frac{7}{16}$ in.	39	$1\frac{1}{16}$ in. full.	$1\frac{1}{16}$ in.

When the pipe is made and put in position, air-valves are provided, to allow the escape of air from the pipe whilst filling, and especially to prevent any collapse should a break occur. These valves are of many forms, the most usual being a piece of leather, loaded and forming a valve opening to the inside of the pipe, and when shut covering a plain hole of from 1″ to 4″ on the top side of the valve. When required, a better class of valve is used, which sinks and opens when the water leaves it, and floats and shuts when the water rises up to it. (See sketch.) An important point is the admission of the water to the pipe in such a way as to prevent air from being sucked into and travelling along the pipe, which will happen and in large quantities unless the water is regulated. The best plan is to put a gate in the pipe, a little below the level where the water enters it, and regulate the flow by the gate, and by this means a steady pressure without violent oscillation can be obtained. Usually, however, the water enters through a funnel-shaped pipe, which allows the air to escape as it enters, and with a little care can be made to answer every purpose. In some instances an air or stand-pipe is put in at a distance from the inlet. This catches the air as it travels along the top of the pipe and allows it to escape.

The following figures,* given in tabular form, show the details of the construction of wrought iron pipe, 18 inches in diameter, 5800 feet long, manufactured by the Risdon Iron and Locomotive Works, San Francisco, for the Spring Valley Water Company, which supplies the City of Francisco with water. The information here afforded

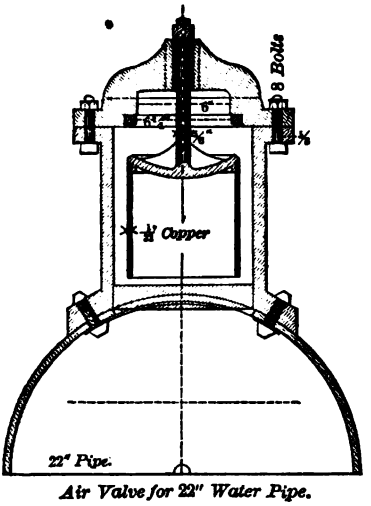

Air Valve for 22" Water Pipe.

mechanical engineers is sufficiently explicit for the construction of wrought iron pipes. This pipe has a tensile strain of about 5000 or 6000 lbs. per sectional inch, and has been made with this low coefficient in order to withstand the pulsation caused by a single-acting plunger pump, making as high as 36 single (4 feet in length) strokes per minute.

These oscillations are found in practice to run from 5 to 9 lbs. per stroke when the air-vessel is properly charged, otherwise by carelessness it may exceed 50 lbs. per stroke.

---

* The data have been obtained from Joseph Moore, M. E., Superintendent of the R. I. and L. Works, under whose immediate direction the pipe was constructed.

Table showing Details of Construction of Wrought Iron Pipe for the Spring Valley Water Company, San Francisco, Cal.

Thickness of the bands.	Width of the bands.	Thickness of the sleeves.	Width of the sleeve.	Width of the sheets used in the pipes.	Thickness of the iron used in the pipes.	Diameter of rivets used.	Pitch of the circle seams in the outside courses.	Pitch of the circle seams in the inside courses.	Amount of two laps.	Space between double row.	Length to the jointing holes in the outside courses.	Length to the jointing holes in the inside courses.	Whole length of the outside courses.	Whole length of the inside courses.	Spaces in the circle seams.	Pitch of the double row.	Spaces in the double row.	Amount of the two outside spaces of the double row.	Amount of two laps for the double row.
In.	In.	No.	In.	In.	In.	In.	In.	In.	In.	In.	In.	In.	In.	In.	In.	In.	In.	In.	In.
5-16	4½	11	5½	42	¼	½	1.45229	1.4106283	2	1.10	56.63931	55.01431	59.739	58.114	89	1.7223	22	2.1094	2
¼	4½	11	5½	42	3-16	½	1.45229	1.4207515	2	1.10	56.63931	55.40931	59.73931	58.50931	89	1.7223	22	2.1094	2
¼	4½	11	5½	44	3-16	½	1.45229	1.4207515	2	1.10	56.63931	55.40931	59.73931	58.50931	89	1.7223	23	2.3871	2
¼	4½	11	5½	42	9 Nos.	⅝	1.197	1.7915	1.625	.625	57.456	56.5999	59.706	58.8492	48	1.468	26	2.207	1.625
¼	4½	9	6½	40	11	5-16	.9934692	.9816157517	1.5	.625	57.6212136	56.9337136	59.746	59.0575	58	1.468	25	2.05	1.25
¼	4½	9	5½	42	11	5-16	.9934692	.9816157517	1.5	.625	57.6212136	56.9337136	59.746	59.0576	58	1.468	26	2.362	1.5
¼	4½	9	5½	40	12	5-16	.9934692	.9837709	1.25	.625	57.6212136	57.0587136	59.496	58.9333	58	1.468	25	2.05	1.25
¼	4½	9	5½	38	12	5-16	.9934692	.9837709	1.25	.625	57.6212136	57.0587136	59.496	58.9333	58	1.468	24	1.518	1.25

At Cherokee there is an inverted siphon of wrought iron. The pipe has an approximate inner diameter of 30 inches, discharging 52 cubic feet of water per second. It has been in continuous use for five years, and is now in first-class order. The iron used was ordinary English plate of fair quality. The greatest pressure it sustains is 887 feet, and the thickness of the iron at that point is three-eighths of an inch.

The plan* on the next page taken from the original survey on file in the office of the company, shows the line of the pipe, and different sizes of iron used in construction of the siphon. The maximum strains on the several sizes of iron used are given in the following table:

SIZE OF IRON.		GREATEST PRESSURE.		Maximum tensile strain on iron per square inch, in pounds.
No. of gauge. B. G.	Thickness in decimals of an inch.	Feet.	Pounds.	
14	.083	170	74	13,374
12	.109	288	125	17,202
11	.012	293	127	15,875
10	.134	355	154	17,240
3/16	.187	435	188	15,080
1/4	.250	594	257	15,420
5/16	.312	842	365	17,549
3/8	.375	887	384	15,360

The Virginia City Water Company, Nevada, has constructed a similar wrought iron siphon, 11½ inches in diameter. The maximum pressure in its greatest depression is 1720 feet, equal to 750 lbs. per square inch. The thickness of the iron at the lowest point of depression is No. 0. The pipe was hot-riveted, ⅝-inch rivets, double row on straight seam and single row on round seam. This pipe, when tested, is said to have stood a pressure of 1400 lbs. per square inch.†

THE SUPPLY OR FEED-PIPES.

The water is conveyed to the claims in iron pipes from the pressure-box, and by means of iron distributers on the lower end of the feed-pipe it is distributed to the discharge-pipe as required.

* The Mining and Scientific Press of January 7th, 1871, contains a detailed account of the construction of this pipe, and also gives a diagram of the line.

† The Virginia City Water Company has constructed a second siphon, made of lap-welded pipe, 10 inches inner diameter, ½-inch iron, and placed it alongside of the siphon already built.

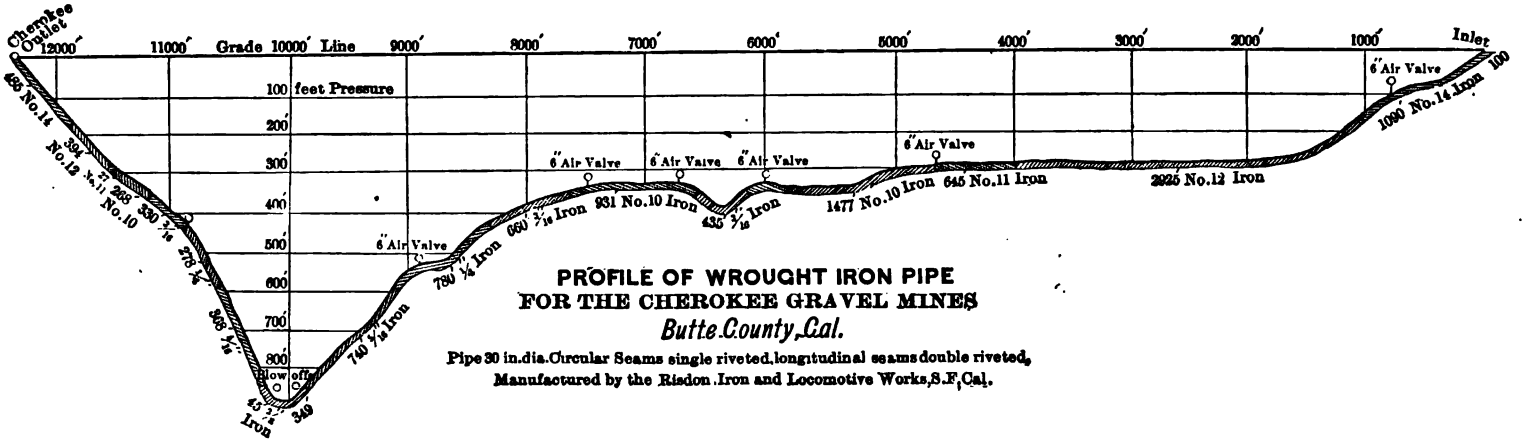

PROFILE OF WROUGHT IRON PIPE
FOR THE CHEROKEE GRAVEL MINES
Butte County, Cal.

Pipe 30 in. dia. Circular Seams single riveted, longitudinal seams double riveted,
Manufactured by the Risdon Iron and Locomotive Works, S.F., Cal.

The pressure-box should be strongly built, and the water supplied in sufficient volume to keep the top of the pipe covered several feet. A grating on the end of the flume which connects with the box prevents the entrance of foreign material, such as sticks, leaves, etc. The pipe is of uniform diameter down to the distributer, except where it enters the pressure-box. Here it swells to a funnel shape, connecting at its greatest diameter with the box. The size of the feed-pipe is determined by the head and quantity of water to be used. The thickness of the iron of which it is constructed varies with the diameter of the pipe and according to the hydrostatic pressure.

As it is not desirable to alter the position of the main feed-pipe often when in place, it should descend in the most conveniently direct line into the diggings, avoiding as far as practical all angles, rises, and depressions. Air-valves with floats, or such valves as will open and close automatically, should be arranged at proper points, to allow the escape of air when filling the pipe, and also to prevent any collapse from atmospheric pressure should a vacuum occur.

Distributing Gate.

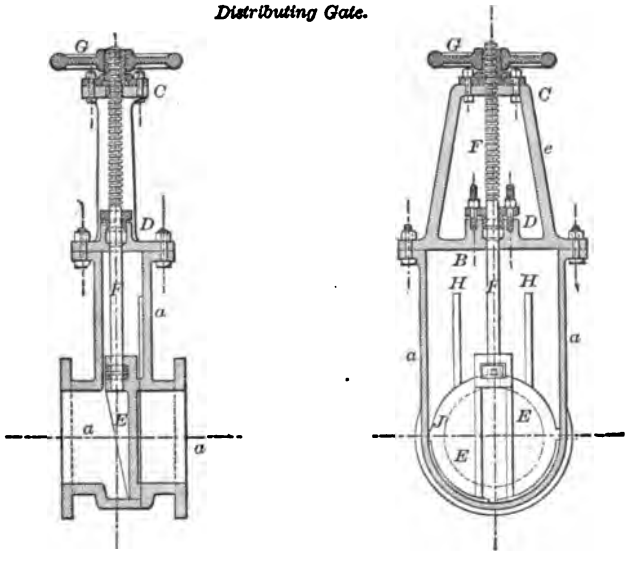

Where the pipe passes over steep banks into the claim, it is carried on an incline trestle, and braced, care being taken to prevent any movement or sliding of the column. When necessary, the pipe is secured with framework and weighted with stones. At the bot-

tom of this incline, where it reaches the bed-rock or level of the workings, it is securely braced and weighted.

A distributing-box (made of cast iron into which the supply-pipe is led, and from which one or more branches can be taken as wanted by means of valves) is generally placed at this point. In some claims double distributing gates are used, in others the main pipe is here forked by means of a breeching having two branches, and a distributer placed on each branch. The branch pipes (generally 11 and 15 inches in diameter) connect directly with the discharge nozzles.

The annexed sketch shows the form of a single "distributer" used in hydraulic mines. This style of distributer is also used as a discharge gate for reservoirs.

In filling the feed-pipe the water should be turned on gradually, all sudden straining of the column being thus avoided. Any leakages in the slip-joints can be readily stopped with a few bags of sawdust, and by wedging them with thin pieces of soft pine.

THE DISCHARGE-PIPES.

The discharge-pipe most generally used is called the "Little Giant."* It is portable and easily handled, having a knuckle-joint and lateral movement. The "Giants" have stream concentrators, and the nozzles used are from 4 to 9 inches in diameter, 5½ to 7-inch nozzles being those most generally in use. The number of "Giants" employed in a claim depends on its size and quantity of available water. There are generally two or three used in a claim.

The annexed sketch (Fig. 1) shows the general form of the Little

The Little Giant. (Hoskin's patent.)

Fig. 1.

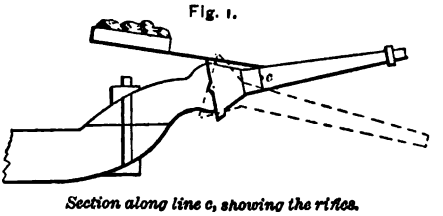

Section along line c, showing the rifles.

* Other nozzles in use are the "Dictator," of Mr. Hoskins, who also invented the "Little Giant," Craig's "Globe Monitor," and the "Hydraulic Chief," an invention of Mr. F. Fisher.

Giant. Fig. 2 represents a monitor hydraulic machine with a "deflecting nozzle," the invention of Mr. Henry C. Perkins, superintendent of the North Bloomfield Gravel Mining Company.

By means of the "deflecting nozzle" the Giant can be turned to any point, and the stream issuing from the pipe can be directed with the greatest facility. Its workings will be easily understood from the following explanation:

Fig. 2.

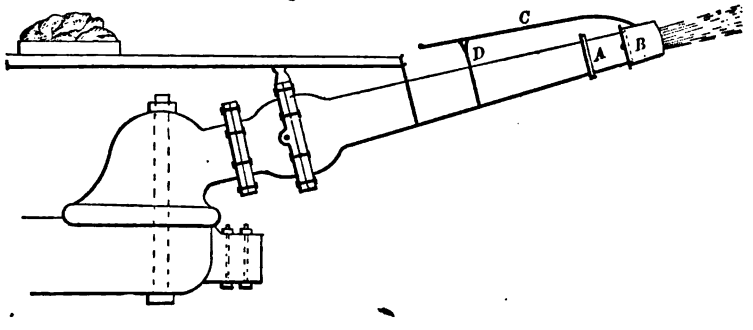

A, Cast iron nozzle.

B, Deflecting nozzle of wrought sheet iron, attached to A by a joint similar to a compass gimbal.

C is a lever to govern the movement of B.

D is a rest for lever, B.

The operation is as follows: When the lever, C, is in the rest, D, the deflecting nozzle, B, allows the stream of water from nozzle, A, to pass through without obstruction. To move the pipe the lever is taken from the rest and thrust in the direction it is desired to throw the stream. Any movement of the lever, C, either to the right or left, or up or down, throws the end of the nozzle, B, into the stream of water, and the force of the water striking it changes the course of the discharge, the entire machine moving in accordance with each change of the deflector. The joint attaching B to A being a universal joint, the nozzle can be turned in any direction.

STORAGE RESERVOIRS.

When water is not taken from running streams, the mines are dependent for their supply on the winter rains and snows. Large reservoirs are built to catch the water from the rains and melting snows, and store it in the spring and summer months for use during the dry season.

The North Bloomfield Company has established a complete system of reservoirs for the storage of water. The Bowman reservoir, and the small reservoirs about it, will hold, when the main dam is completed to a height of 96 feet 3 inches, about 1,000,000,000 cubic feet of water. The cost of the reservoirs and dam to date is $214,392.06.

The Rudyard reservoir, of the Milton Company, contains 535,000,000 cubic feet of water, or 3,980,000,000 gallons. The reservoir

is formed by 3 dams, the highest being 100 feet vertical, and its cost $150,000. The storage reservoirs of the Eureka Lake and Yuba Canal Company, consisting of the French, Weaver Lake, and Fancherie reservoirs, have an estimated aggregate* capacity of 819,800,000 cubic feet of water. Independent of these reservoirs, all mines at a convenient distance from their works have what are called distributing reservoirs. From these places water is easily distributed to the claims, or they are used to retain the surplus coming from the main ditch when the claims are shut down.

DAMS.

In California, the rainfall from the 1st of May to the middle of October is inconsiderable, and hence, in order to secure a permanent supply of water for the hydraulic mines, it has been in many cases necessary to form large reservoirs, in which water is impounded during the rainy season, or while the mountain snows are melting, which is used to supply the mines during the dry months.

Large dams of earth, timber, or stone have been constructed to form these storage reservoirs. Amongst the most considerable dams in the State are: The Bowman dam, height 100 feet; catchment, 28.94 square miles; three dams owned by the Milton Mining and Water Company, forming the English reservoir; the largest of these dams having a height of 131 feet from the deepest portion of its foundation to its summit; this reservoir impounds 618,000,000 cubic feet of water, has a high-water area of about 395 acres, and is fed from a catchment basin 12.1 square miles; the cost of three dams has been about $150,000; the Fordyce dam of the South Yuba Canal Company, height 60 feet, costing about $160,000; catchment basin, about 40 square miles; the Eureka Lake dam of the Eureka Lake and Yuba Canal Company, height 68 feet, storage capacity 630,000,000 cubic feet, high-water area 328 acres; catchment basin, 5.1 square miles.

All the foregoing dams are built of dry rubblestone, and faced with a water-tight lining of plank. The Tuolumne County Water Company has several large dams built of timber-cribs. The largest dam built by this company is across the south fork of the Stanislaus River.

---

* French reservoir, 661,000,000 cubic feet capacity; Weaver Lake reservoir, 100,000,000 cubic feet capacity; Fancherie reservoir, 58,800,000 cubic feet capacity. See Report of J. D. Hague, M. E., pp. 15, 16, 17.

It* is over 60 feet in height, and 300 feet wide on top (across the stream), forming a reservoir with 300 acres high-water area. The catchment is of large size, and great freshets pass over the dam. The dam is at an elevation of about 8000 feet above the sea-level.

It is built of cribs of round tamarack logs, from 2 to 3 feet in diameter, and with no stone-filling. The cribs are about 8 feet square from log to log (say 10 feet centre to centre), and the timbers pinned together by wooden treenails. The dam rests for its entire base on solid granite bed-rock. The angle of face with horizon is 50°.

The face is formed of flattened 8-inch timbers, pinned with wooden treenails to the crib, and calked with cedar-bark. The flood-water passes over the crest of the dam for its entire length.

The water is drawn off by several gates, one above the other, placed on the inclined water-face. When a gate is opened, the water flows directly into the interstices of the crib.

The dam was built in 1856, and has needed no repairs. Large derricks lifted the logs into place. The total cost of the dam did not exceed $40,000.*

Pine dams, owned by the same company, constructed on the same plan, have decayed, while cedar cribs are still in perfect order.

The Spring Valley Company's Concow reservoir is formed by two earthen dams, each about 55 feet in height; one of these dams, which is used as a waste, has its lower side built of heavy brush, imbedded in the earth.

The catchment basins of most of these reservoirs embrace bare mountain slopes and valleys, and in ordinary seasons from 60 to 80 per cent. of the rain and snowfall flows into the reservoirs.

The Bowman dam, owing to its position, has been constructed by the North Bloomfield Company with due reference to the possibilities of breaks occurring in the several other reservoirs east of it, and it is intended, in any emergency, to hold the drainage not only of its own watershed, but also in case of accident to withstand any rush of water from the reservoirs beyond it. It is the largest dam on the coast. The following detailed account of it was written for this paper by Mr. Hamilton Smith, Jr., C. E., who planned and constructed the dam:

---

* These details were received from Mr. Dobie, who for many years had charge of the reservoirs and ditches of the Tuolumne County Water Company.

THE BOWMAN RESERVOIR AND DAMS.

This reservoir was designed for the supply of water during the dry season of the year for the Bloomfield Hydraulic Gravel Mine, owned and operated by the North Bloomfield Mining Company.

It is located in a mountain valley, on the head-waters of one of the branches of the Yuba River, in Nevada County, California, at an elevation of 5400 feet above sea-level.

THE BOWMAN DAMS.

1
Section across Cañon
through main dam.

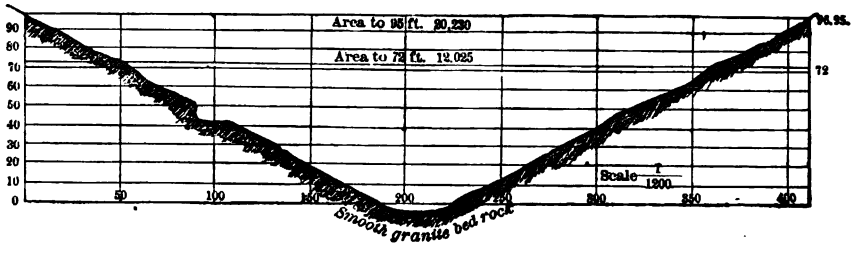

It is fed from a gross catchment basin of 28.94 square miles. There are a number of other reservoirs owned by the Bloomfield and Eureka Lake companies on the same stream above the Bowman reservoir; the upper one of these is of large size, holding 630,000,000 cubic feet of water. In ordinary seasons these upper reservoirs retain all the water flowing into them; hence the catchment basin of the Bowman is only about 22 square miles, except in years of large rainfall. The mean annual rain and snowfall at the Bowman dam has been 77.91 inches for the past five years, of which about 75 per cent. flows into the reservoir. Two dams are needed to impound the water. The main one, placed across the narrow gorge forming the outlet of the valley, has a maximum height of 100 feet (96¼ feet above datum base-line), and an extreme length on top of 425 feet. The smaller dam, placed across a gap near the mouth of the valley, has a maximum height of 54 feet, and an extreme length on top of 210 feet. It is fitted with wasteways, and over it will be discharged all the surplus water from the reservoir.

Ordinary high-water mark will be fixed at a point 4 feet below the summit of the main dam, being coincident with the crest of the waste dam. At this height there will be impounded 845,000,000

cubic feet of water, with a surface area of 502 acres. By placing temporary flush-boards on the top of the waste dam, the water can be brought up to the 95-feet line (above datum base), increasing the quantity of water stored to 920,000,000 cubic feet.

The cañon or stream feeding the reservoir has a maximum flow during great freshets of from 5000 to 7000 cubic feet of water per second. The existence of other reservoirs higher up the stream adds to the danger from great floods, and therefore the Bowman dams have been designed to withstand not only the freshets in the cañon, but also any additional influx of water caused by breaking of upper dams.

DESCRIPTION OF THE MAIN DAM.

Sketch 1 shows a profile across the cañon, being a longitudinal section through the dam. Sketch 2 gives a cross section of the dam at its extreme height.

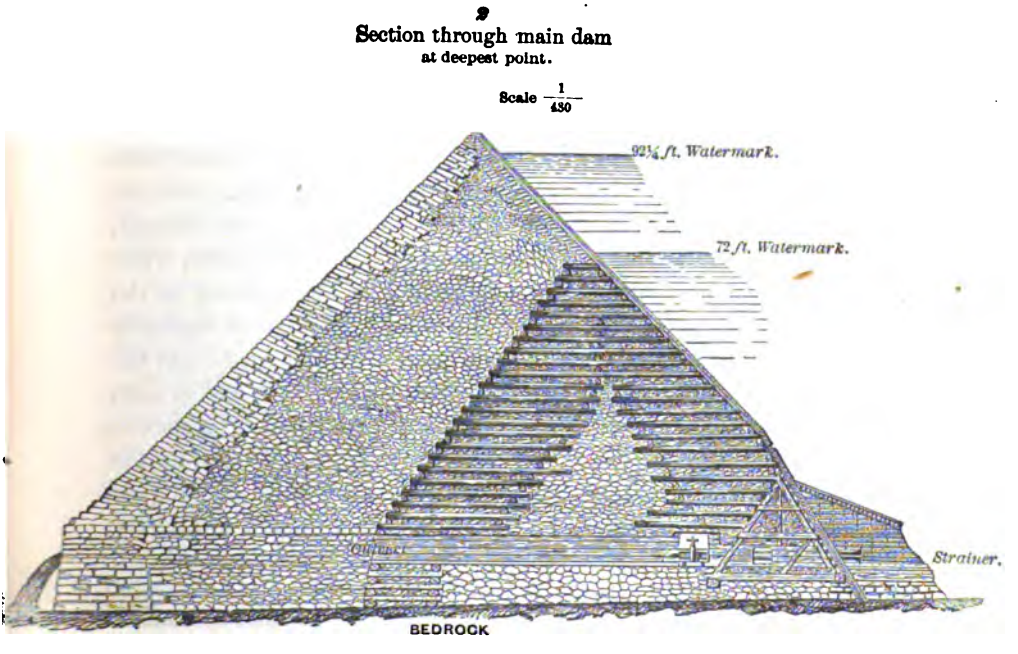

It rests on solid granite bed-rock, which is sufficiently free from seams to prevent any considerable leakage through crevices in the rock.

The dam was built in the year 1872 to the height of 72 feet, as shown by sketches, being a timber crib formed of cedar and tamarack

unhewn logs, firmly notched and bolted together, and solidly filled with loose stone of small size. A skin of pine planking spiked to the water face formed its water-tight lining. During the years 1875 and 1876 the dam was increased to the height of 96¼ feet above datum line (100 feet extreme height)* by filling in a stone embankment on the lower side of the old structure, faced with heavy walls of dry rubblestone of large size. The down-stream face-wall is 15 to 18 feet thick at the bottom, diminishing to 6 or 8 feet at the top. Most of the face-stone in this wall are of good size, weighing from ¾ to 4½ tons, and there are many stones of equal weight in the backing. The lower portion of the wall is 17½ feet high, with a batter of 15 per cent. It is built of heavy stone with ranged horizontal beds, and with the face-stone tied to the backing with long iron clamps.

The upper portion of the wall is built with a slope of 45°, and the face-stone are bedded on an angle of 22½°, thus dividing the angle between a horizontal bed and a bed at right angles to the face. No attempt at range work was made in this upper portion of the wall. Above the 68-feet line ribs of flattened cedar 8 inches thick are built into the up-stream face-wall, and are tied to it by iron rods ¾ inch diameter and 5 feet long. To these ribs a planked skin is firmly spiked. This planking is of heart sugar-pine, 3 inches thick and 8 inches wide, with planed edges fitted with an outgage similar to ship planking. The plank was put on nearly thoroughly seasoned, and swells sufficiently to make the face practically water-tight, without either battens over the joints or calking. The opening at the joints made by the outgage suck in small particles of vegetable matter, which take the place of calking to a great extent. At the bottom the planking is fitted closely to firm bed-rock and calked with pine wedges. There will be three thicknesses of plank (9 inches in all) placed on the lower 25 feet, two thicknesses (6 inches) on the next 35 feet, and one thickness on the upper 36 feet. From past experience, it is believed that this planking will remain sufficiently sound for twenty years at least, and then it can readily be replaced.

* The main dam was not quite finished in 1876, it being deemed advisable to allow a large stream of water, 50 to 75 cubic feet per second, to flow over the present summit of the stone at 85 feet above datum, and to percolate through the stone embankment, in which some sand and fine stone are mixed. This will finally settle the structure, and then the top courses for the crest will be put in place.

A culvert extends through the dam, as shown by sketch 2, through which the water is drawn from the reservoir. This culvert is built with heavy dry rubble foundation and walls, and is covered with granite slabs, 16 to 18 inches thick and 6½ feet long. Three wrought iron pipes of No. 12 iron, each 18 inches in diameter, pass through the water face of the dam, as shown by sketch 2. Their upper mouths are protected by a strainer formed of two-inch plank, anchored to the bed-rock. A separate valve or gate is placed at the lower end of each pipe; the water passing through the gates, aggregating a flow of 280 cubic feet per second when the three are open, discharges into a covered timber sluice 7½ feet wide, 1¾ feet high, passing to the lower edge of the dam, and discharges on the solid bed-rock of the creek bed. The gates are approached by a man-way above the sluice. The crest of the dam will be formed by a coping of hewn heart cedar timbers, 18 inches wide on top, and anchored securely by iron bolts to the stone wall below.

It is not probable that any water will ever pass over the crest of the main dam; but should a break occur at the large reservoir higher up the stream, when the waste-gates at the waste-dam are closed, the difference in level between the crests of the main and the waste dams might be insufficient to allow the resulting flood to pass over the waste-dam. Additional care was, therefore, taken in building the down-stream face-wall of the main dam, so that it can in any such possible emergency resist without injury a large stream of water passing over the crest. Should this happen, a large quantity of water would enter the structure, owing to the inclined beds of the face-stone and the flat slope of the wall, which would seek its discharge through the interstices purposely left in the nearly vertical portion of the lower wall. To prevent the consequent hydrostatic pressure, which would accumulate at the base of the dam to perhaps twenty pounds to the square inch, from forcing out the lower face of the wall, it was carefully built and tied with iron rods, as before described.

There are 55,000 cubic yards of material in the structure, weighing about 85,000 tons; the hydrostatic pressure, with the water-line 95 feet above datum against a vertical plane of that height across the cañon at the dam site, will be 21,745 tons. The dam is built v-shaped, with the vertex of the angle of 165° pointing up stream. This mode of construction adds somewhat to the stability of the structure.

The cost of the dam, when completed,* will be $132,000. The rather peculiar construction of this dam was due to the following causes: The stone cliffs in the vicinity of the dam are composed of an exceedingly hard granite with great numbers of short cross seams, making it most costly to quarry dimension stone of considerable size. The stone has rarely a good cleavage, and the cost of dressing it down to regular beds is hence great.

No limestone is to be found near by, and any lime used must needs have been transported to the work from a long distance. The cost of transport would have been so great as to render the use of lime impracticable.

On the side of the mountain, at the distance of about one mile from the dam, there was a large pile of loose stone, the result of centuries of disintegration of the cliffs above. This stone was too irregular in shape to be used in wall-building, but of good quality for an embankment. It was much cheaper to build a tramway to this stone already quarried by nature, load it on cars, and haul it to the work than to quarry a smaller quantity from the cliffs nearer the dam.

Hence, the supply of material being abundant, the flat slopes of 45° for the wall were adopted, which allowed with safety very much lighter face-walls to be used than would have been the case had they been more nearly vertical.

The stone for the walls as built was quarried from solid rock, and cost in place per cubic yard three or four times more than the loose stone brought from the mountain side. When in the future the timber logs forming the cribs in the original 72-feet dam decay, there will be some slight subsidence of superincumbent stone. The depth of the stone is so considerable, and the slopes of the walls so flat, that it is believed this subsidence will not be noticeable.

DESCRIPTION OF THE WASTE-DAM.

Sketches 3 and 4 show longitudinal and cross sections of the dam. It is a crib of round cedar timbers, varying from 12 to 30 inches in diameter, notched down to heart wood at the joints, and firmly bolted with three-quarter and one-inch long drift bolts, with the foundation logs fastened to the bed-rock with 1½ inch

* Up to December 31st, 1876, $126,000 had been expended on its construction, and the remaining $6000 necessary to complete the work will be expended during the year 1877.

iron dowels. The crib or rather the successive cribs are solidly filled with granite stones of various sizes, from several tons down to a few pounds. No sand or fine stone was used in this filling. A plank facing of three-inch heart sugar pine is spiked on the water face,

3
Section across Ravine
through waste dam.

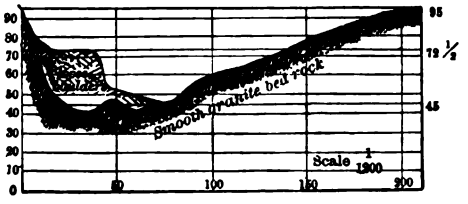

making a water-tight lining similar to that on the main dam. The crest of the dam is 92½ feet above datum line, being, as stated before, 4 feet lower than the summit of the main dam. In it are cut 28

4
Section through waste dam.
Scale 1/480

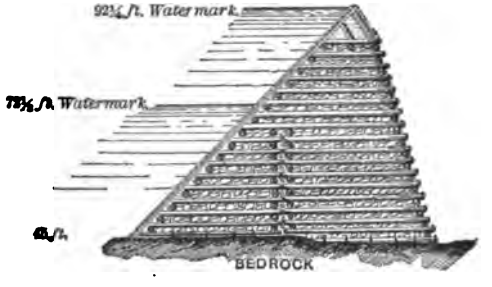

waste-ways, each 4 feet in width, and having a depth of 7 feet below the crest. These wastes are closed, when all danger from freshets is passed, with boards 2 inches thick, 8 inches wide, 4½ feet long, placed horizontally, and sliding to their places one above the other on the inclined slope of the water face. This style of gate, although the simplest form known, has been found by long experience to be the very best.

The weight of the dam is about 6500 tons, and the hydrostatic

pressure, with the water-line at 95 feet above datum against a vertical plane of that height across its upper face, will be 2571 tons.

It is believed that the structure is sufficiently stable to allow with safety a flood of 16,000 cubic feet of water per second to pass through the wastes and over its crest.

The water passing over the dam will fall on bare granite bed-rock, and thence down a steep gorge. From past experience in the use of cedar timber, it is safe to assume that the life of this structure will be from twenty-five to thirty years, and possibly longer. Its cost has been $15,000.

HYDRAULIC WASHING.

The tunnel or opening for the sluices having been completed, the sluices placed in position, lined, and riffles set, water is turned on in the pipes, and work commences. The first work is started near the head of the sluice, and the mine opened from that point. As the banks are washed away, the bed-rock cuts are driven towards the face of the work, and the sluices are advanced as required.

To cave the bank, one pipe is kept playing on the lower part of it, at an obtuse angle, cutting out the gravel, and a second stream of water is directed from another pipe on the opposite side, forming a cross-fire, which materially aids the undermining. Any surplus of water not used in the pipes is allowed to run over the banks. In well-regulated works all the water should be used through pipes, and none allowed to waste into the claim. When the dirt caves readily, one pipe should be employed to do the cutting, and the second pipe should be manipulated clearing away the débris.

In working a claim, the face of the bank should be kept square. Advantage should be taken of the corners when left, and under all circumstances working into what is called a horseshoe form should be avoided. If the banks are kept square, the work can be accomplished in less time, at less expense, and with fewer accidents. On the other hand, where a cut is pushed rapidly ahead, and the work is not squared, the men at the pipes soon stand encircled by high banks, washing can no longer be prosecuted to advantage, and the lives of the miners are imperilled. The majority of accidents arising from caves have been caused by this style of work.

HIGH BANKS.

Where the banks are very high, to mine to advantage it is advisable to wash the deposit in two benches. Banks over 150

feet in height are dangerous to work as a single bench. At North Bloomfield and at Smartsville, they are working single benches 250 feet high. When a cave is coming, to avoid the sliding of the great detrital accumulations, the water should be turned away from the falling masses, and the dirt will not run any distance; but if it is allowed to remain on the bank, a great rush of water and débris ensues, and the men at the pipe have frequently to run for their lives. Such occurrences, arising either from carelessness or accident, cause a loss of time, and frequently entail damage to the pipe and machines.

Caves, when practicable, are generally made towards evening, and the night-shift runs them off. Locomotive reflectors or fires of pitchwood are used to illuminate the banks during the night. The electric light may ultimately be found the most desirable.

CONTINUOUS WORK—GROUND SLUICES.

In well-conducted claims the washing should be continuous, and no water allowed to run to waste. It is, therefore, requisite to have several faces or openings, so that the water can be used from time to time on them, whilst the cuts are being advanced and the sluices lengthened. These cuts, or "ground sluices," as they are called, are mere trenches made in the bed-rock towards the face of the bank, washed for the purpose of collecting the water and material, and conveying them to the sluices. As a protection against theft, the sluices of claims worked intermittingly are run full of gravel before turning off the water.

The length of runs in gravel claims is dependent on circumstances. Some claims clean up every twenty days or month, others run two or three months, whilst some only clean up every season, after the water supply has ceased. In point of economy, the fewer clean-ups the better.

BLASTING.

Where the ground is very hard, recourse is had to blasting. For this purpose a small powder-drift is run in on the bottom from the face of the bank a given distance, proportionate to the ground to be blasted. From the end of the straight drift a cross drift forming a T is driven. For example, in hard cement like at Smartsville, with an 80-feet bank, in a case where the ground is ordinarily bound, a drift is run in at the bottom of the bank, say 85 feet long. At the end of it cross-drifts are run out 45 feet in length; 40 feet from the

face of the bank two similar cross-drifts are also driven. From the ends and centre of each cross-drift two small "lifters," as they are called, are driven at right angles, extending respectively half way between the cross-drifts and the face of the bank. These places are then filled with powder, hard cement ground requiring from 450 to 500 kegs.

The heads of several of the kegs being removed, the main drift is tamped, and the powder is exploded by means of an electric battery or fuse.

In large blasts several cross-drifts may be required, and in such cases it is customary to fire the powder simultaneously in several different places by electricity. The quantity of powder used is determined by the position, character, and height of the bank, a sufficient quantity only being taken to shatter it.

In some places, with lighter material, two or three hundred kegs of powder will easily do the work that five or six hundred barely accomplishes in heavy cement. At Blue Point, a blast of 2000 kegs was exploded; at the Enterprise Mine, 250-feet banks, a blast of 1700 kegs was fired. The powder is of the ordinary blasting quality. For destroying large pieces of lava, pipe-clay, boulders, trunks and stumps of trees, giant powder cartridges are found very efficient.

It is customary in certain districts to wash off the top or lighter gravel, and subsequently blast the bottom cement. For this purpose shafts, fifteen to twenty feet deep, as may be demanded, are sunk, and a smaller chamber is excavated in the bottom of them. The chamber is charged with five or six kegs of powder, tamped, and then exploded by electricity. Undoubtedly there is a great waste of powder in bank blasting, and the subject is worthy of investigation with a view to future improvement in this particular.

In blasting, it is desirable to thoroughly shatter the material, *i. e.*, to separate rock and cement, so as to facilitate its washing, thus insuring the earliest separation of the gold, by enabling the bulk of the precious metal to come in immediate contact with the quicksilver in the head of the sluices, and affording every opportunity for the most complete scouring and securing of the eroded gold particles.

The following method of bank blasting has been found to give excellent results with banks from 50 feet to 125 feet high, such as are generally encountered in hydraulic mining, and likewise in cement gravel of ordinary tenacity. In the absence of more definite knowledge on the subject, its adoption can be recommended.

The main drift should be run in a distance two-thirds the height

of the bank to be blasted. The cross-drifts from the end of the main drift should be driven parallel with the face of the bank, and their lengths determined by the extent of the ground which is to be blasted. A single T is all that is necessary. The amount of powder* required for charging the drift is from one-half to two-thirds of a keg of powder, minimum quantity, per 1000 cubic feet of ground covered by the drifts—*i. e.*, height of bank × length of cross-drifts × length of main drift = cubic contents. The quantity of powder used must depend on and vary with the position† of the bank and the character of the gravel.

Late experiments made with the Judson powder, applied as above directed, have given good results, and, though not definitely determined, the indications at present are that the use of this new explosive will be a great saving in the cost of bank blasting.

The shattering effects of powder, used in the manner and proportion already described, have been roughly estimated from the appearance of the ground subsequently washed at from 225 to 230 cubic feet of ground shattered per pound of powder exploded.‡

Apropos of tamping, one of the attendant costs of bank blasting, it may be well to remark that, as yet, with the present explosives employed, all experience in bank blasting proves that, with *a strong tamping*, the best results are obtained. With 150, 250, and 350-feet banks a different method of blasting is adopted. The main drift in such cases is driven in from the face of the bank 45 to 50 feet in length. The cross-drifts are run parallel with the face of the bank, and their length determined by the ground to be moved.

In charging these drifts the amount of powder used should be sufficient to blow out the bottom ground (the line of least resistance), the bank then falling by its own weight. The firing§ of all blasts is best done by electricity, and where dynamite exploders with platinum wires are used the "compound circuit" is most desirable.

The powder in boxes or kegs is piled up in rows in the drift; two wires, *A A* and *D D*, extend along the middle row, the tops of

* Ordinary black blasting powder, 25 lbs. per keg.

† The quantity of powder is increased when the banks are strongly bound, or when the gravel is exceedingly tough.

‡ Experiments made with blasts of 250 to 400 kegs powder.

§ A paper, titled On the Simultaneous Ignition of Thousands of Mines, by Julius H. Striedinger, read before the American Society of Civil Engineers, and published in its Transactions for June, 1877; also in London Engineering, August 17th and September 21st, 1877, contains much valuable information on the subject of simultaneous ignition of mines.

the boxes on which the wires rest being removed. The exploders, *b b b*, are inserted in giant powder cartridges, and placed on top of the paper covering the powder. (The Judson powder comes covered

with strong paper to exclude moisture.) The wires, *A A* and *D D*, are then connected with the wires, *Y Y'* and *Z Z'* (as shown in sketch), which extend to the battery.

DERRICKS.

In working hydraulic claims, boulders are frequently encountered which cannot be moved by hand. To facilitate their removal a strong derrick is used. The bed-rock derrick now in use has a mast 100 feet high, and a boom 92 feet long. The whole is set in a cast iron box placed on sills. It is held in position by six guys of galvanized iron wire rope, $1\frac{1}{8}$ inches in diameter. A whip-block, with $\frac{3}{4}$ inch diameter steel rope, is used for the hoisting tackle. A 12-feet diameter hurdy-gurdy wheel is attached, and, using 30 inches of water, it lifts stones weighing 11 tons. The guys are held by double capstans.

The derrick is not taken down when moved. It can be readily moved one hundred feet in ten hours.

EXPERIMENT WITH THE HURDY-GURDY WHEEL,* AT NORTH BLOOMFIELD.

As the hurdy-gurdy wheel is the outgrowth of hydraulic mining, the following table showing its efficiency may be interesting.

---

* These experiments were made at the N. B. G. M. Co.'s Works, by H. Smith, Jr., C. E., and as they are the only experiments of the kind made with the hurdy-gurdy wheel, they are here given.

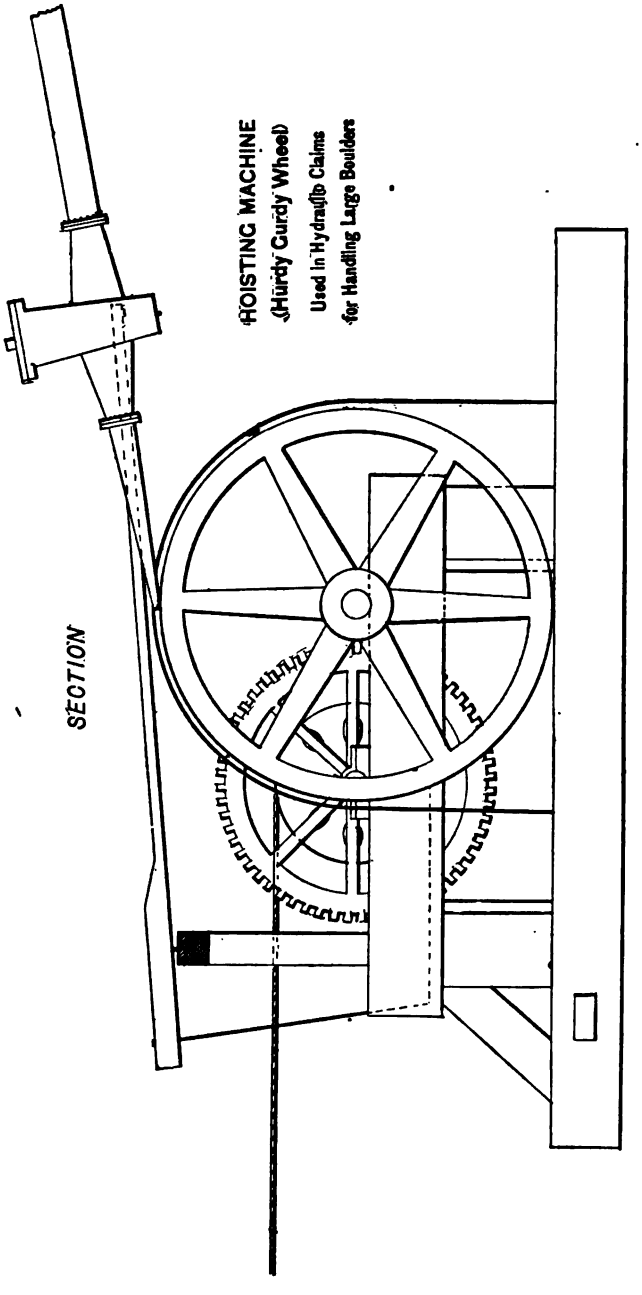
HOISTING MACHINE
(Hurdy Gurdy Wheel)
Used in Hydraulic Claims
for Handling Large Boulders
SECTION

The wheel was 18 feet in diameter on outside, and 17 feet 4 inches in diameter to inner line of buckets (17 feet 8 inches in diameter at centre line of buckets). The buckets were 4 inches deep, with flanges on each side.

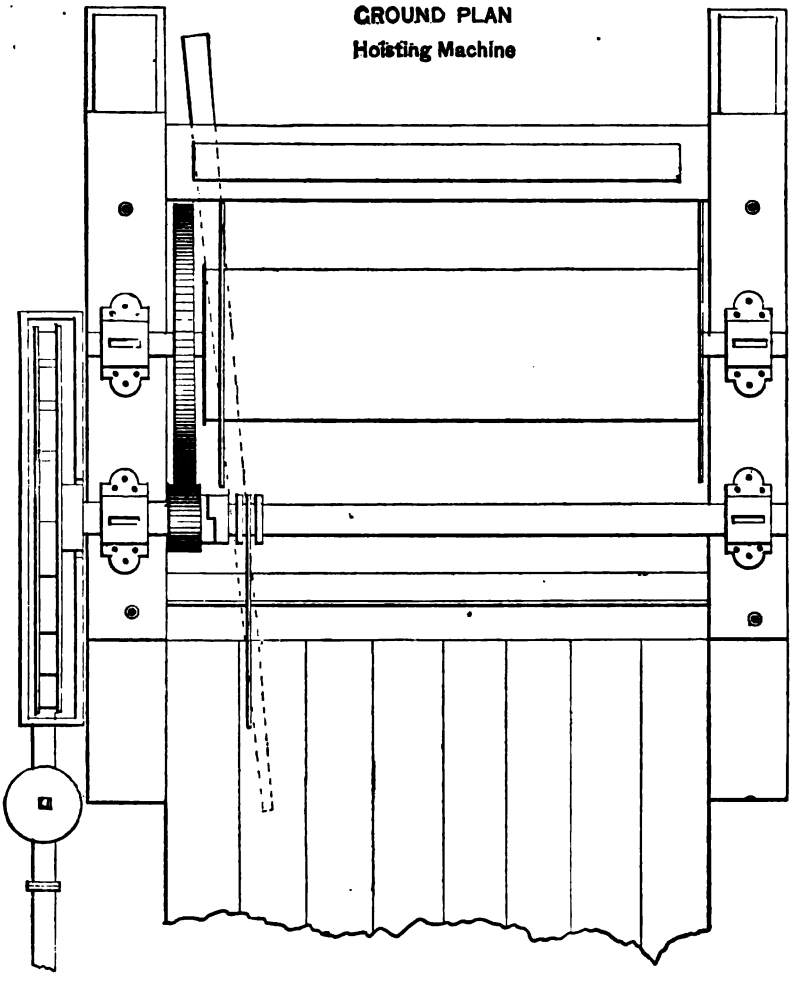

The work done was measured by a Prony dynamometer, carefully made.

The head given shows the *real* head in feet at the point of discharge; that is, the head due to a discharge from a pipe of infinite size.

Description of nozzle.	Diameter of nozzle in feet.	Head in feet at nozzle.	Discharge of water per second in cubic feet.	Velocity of water due to gravity.	Actual velocity of water at smallest diameter of nozzle.	Speed of wheel at centre of buckets when running light.	Highest horse-power developed.	Ratio of work done to theoretical power of water.	Speed of wheel at centre of buckets when giving most work.	Number of nozzles. See sketches.
Nozzle tapered,	.0531	322.3	.323	144.0	145.8	82.8	3.8	.318	48.8	1
Ring, ...	.0597	316.3	.240	142.6	85.7	76.4	2.7	.312	44.8	2
Nozzle tapered,	.0850	312.1	.759	141.7	133.7	93.6	11.7	.437	57.1	3
Ring, ...	.0847	312.6	.511	141.8	90.7	. . .	7.5	.414	54.7	4
		312.2	.509	141.7	90.3	90.4	. . .	. . .	. . .	4
Nozzle, ...	.0850	314.4	.774	142.2	136.4	. . .	11.8	.427	57.8	3
Nozzle tapered, uncut, . . .	.0868	316.1	.813	142.6	137.4	. . .	11.3	.387	59.8	5A
Nozzle, ...	.1017	317.9	1.111	143.0	136.8	. . .	15.9	.396	66.2	7
		315.6	1.110	142.5	136.7	95.2	. . .	. . .	. . .	7
Nozzle cut off, .	.0868	332.6	.831	146.2	140.4	. . .	13.0	.413	58.2	5B
		335.9	.833	147.0	140.8	98.5	. . .	. . .	. . .	5B

An experiment at the Empire Mill, French Corral, was made under the following circumstances, giving the annexed results:

Ten stamps, weight of each 693¼ lbs. Drop, .768 feet. Speed of stamps, 62.2 drops per minute. Work done by 91.68 cubic feet of

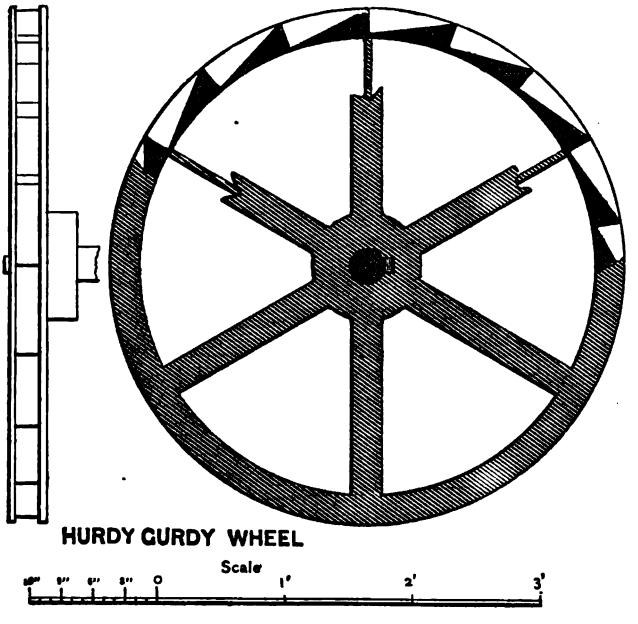

water per minute. Head, 130.1 feet. Size of wheel, 13⅛ feet outer diameter. Diameter of wheel, 12.58 feet to centres of buckets. Size

of buckets, 4 inches wide and 6 inches deep, set 10 inches apart. Water conducted to wheel through an 11-inch pipe 866 feet long. The wheel was direct on the cam-shaft; single cams used. The mill crushed sixty tons of gravel in twenty-four hours; ½ inch screens used.

Description of nozzle.	Diameter of nozzle in feet.	Head in feet at nozzle.	Discharge of water per second in cubic feet.	Velocity of water due to gravity.	Actual velocity of water at smallest diameter of nozzle.	Speed of wheel at centre of buckets when running light.	Highest horse-power developed.	Ratio of work done to theoretical power of water.	Speed of wheel at centre of buckets when giving most work.	Number of nozzle. See sketch.
Ring, ...	.1823	130.1	1.528	91 4	58.5	. . . .	10.0	.445	41.0	8

The head at French Corral was the height of the water in pen stock above the nozzle, no allowance being made, as was the case in

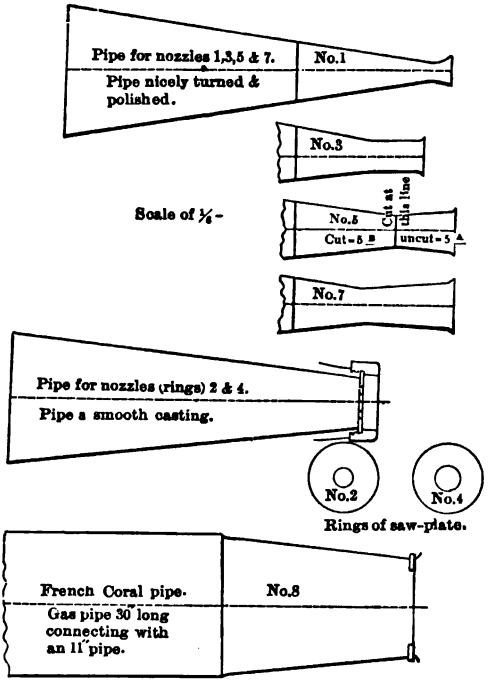

the Bloomfield experiments, for loss of head by friction in pipes and some leakage.

STATISTICS OF YIELD OF GRAVEL-FIELD.

Statistics showing the quantity of material washed, and the corresponding yield in gold, are rare, difficult to obtain, and for the most part unreliable. This is due principally to the fact that, in the early days of placer mining in California, the question to be solved by the miner was not what the gravel would yield per cubic yard, and what it would cost to move it, but rather how many ounces of gold dust he could "pan out" or "rock out" between sunrise and sunset. All that he required was that the daily yield in *dust* should exceed the cost of living, etc. When it fell below this, he moved his camp to other grounds.

The wonderful productiveness of the river bars and shallow placers, attested by the early gold bullion and dust shipments from this State, created an extravagance usual to all new and rich mining countries, the baneful effects of which are still visible. Gold in such profusion is no longer found so conveniently scattered. The introduction of hydraulic mining requiring the assistance of capital has inaugurated a new era in gravel-washing. Hence all data of the yield and costs of working gold-bearing surface deposits become valuable, and accordingly the following tables have been added:

Table I. Showing the Yield of Gravel per Cubic Yard at Various Hydraulic Claims.

Name of claim.	Location.	No. cubic yards washed.	Gross yield.	Yield per cubic yard.	Height of banks in feet.	Authority.	Remarks.
American Co.,	Sevastopol, Nev. Co.	5,171,834	$1,241,240.30	$0.24	120	H. Smith, Jr.	
Blue Tent,	Nevada Co.	5,138,150	780,000.00	15	.....	Ray. Rep., 1874.	Estimated by several engineers, Ray. Rep., 1874, p. 19.
Eastground, Dry Creek,	Shasta Co.	50,000	9,000.00	18	.....	" "	
Westside, Dry Creek,	" "	2,000	741.26	37	.....	" "	
Piety Hill,	" "	1,333	22,000.00	16.50	20	W. K. Conger.	Raymond's Report, 1874.
Dry Creek,	" "	200 lin. ft. chn'l.	170,000.00	.....	.....	Cooper.	" " "
Whitesides Mine,	El Dorado Co.	9,722	100,000.00	10.28	70	Ray. Rep., 1875.	Calculated from data, p. 84.
Spanish Mine,	" "	1,422	13,600.00	9.56	4	" "	" " "
Nagler Claim,	" "	20,000	100,000.00	5.00	80	" "	" " "
*Indiana Hill,**	Placer Co.	14,738	75,422.47	5.29	.....	" "	Gravel worked in a mill. Cubic yards estimated from coarse dirt in cars, p. 100.
Bald Mountain Co.,	Sierra Co.	115,950	328,352.38	2.83	.....	" "	Deep placer mining; gravel extracted and then sluiced. Cubic yards estimated from coarse dirt.
Bald Mountain Co.,	" "	50,040	296,737.28	5.93	.....	H. W. Wallace.	From June 24th, 1875, to June 24th, 1876, 100,080 carloads of gravel mined, stripping 300,240 superficial feet of bed-rock. Each car contained 1 cubic yard of loose gravel — ⅓ cubic yard of gravel in place.
Bald Mountain Co.,	" "	49,022	235,797.87	4.79	.....	" "	Year ending June 24th, 1877, 98,044 car-loads extracted, stripping 343,768 superficial feet of bed-rock.
Bennet's Claim,	Calaveras Co.	963	1,320.00	1.37	13	J. Rathgeb.	Calculated from data in Raymond's Rep., 1872.
Johnston Claim,	" "	2,268	1,560.00	68.5	12½	"	" " " "
Hedwick's Claim,	" "	2,963	1,450.00	48.5	20	"	" " " "
Kansas Co.,	Fr. Corral, Nev. Co.	67,500	223,000.00	3.30	27	H. Smith, Jr.	Cement claim.
Empire Claim,	" " "	29,166	200,000.00	6.85	18	" "	The richest gravel selected and milled.
Nebraska Co.,	" " "	(tons) 600	9,000.00	15.00 per ton.	.....	" "	
Blue Point,	Smartsville, Yuba Co.	93,944	115,728.17	1.23	57	" "	
No. 8 Claim, 1874-5,	N. Bloomfield, Nev. Co.	1,858,000	74,271.77	03.9	180	Henry C. Perkins.	
No. 8 Claim, 1875-6,	" " " "	2,919,700	192,735.73	06.6	260	" "	
French Hill,	Stanislaus Co.	16,368	9,782.98	61	18	R. Abbey.	
Light Claim,	" "	73,586	8,468.35	11.4	57	"	
Sicard Claim,	" "	155,347	20,197.07	13	38	Joseph Messerer.	Top gravel.
New Kelly Claim,	" "	161,032	8,852.31	05½	.....	J. L. Jernegan, Jr.	Upper bench gravel.
New Kelly Claim,	" "	252,614	35,012.33	13.8	.....	" "	This ground was washed in 176 days and five hours, ending August 3d, 1877. The yield includes the top and bottom gravel.

Gold Run,.....	Placer Co.....	48,000,000	2,074,356.00	04.8	.....	Wm. H. Pettee.....	This deposit contains many large boulders.
Paragon Mine,.....	" "	124,000	92,000.00	74.2	70	Jos. McGillivray...	
Paragon Mine,.....	" "	22,275	17,387.78	78	71	" "	
Dardanelles & Oro,.....	Forest Hill, Plac. Co...	3,630,000	476,000.00	13.1	150	" "	Rep. Eureka Lake & Yuba Canal Co. Clms., p. 37.
McCarty's Diggings,.....	Columbia Hill, Nev. Co.	3,000,000	345.663.10	04.3	... .	J. D. Hague.....	
Smartsville Mine,.....	Sucker Flat, Yuba Co.	2,042,880	400,000.00	19.5	112	Amos Bowman.....	
Union Gravel Mine,.....	Empire Hill.....	792,000	120,000.00	15	90	" "	See Report on the Smartsville Blue Gravel and Excelsior Canal Co., pp. 32–35.
Pactolus Gravel Mine,...	Yuba Co.....	1,468,800	295,000.00	20.8	85	" "	
Blue Gravel Mine,.....	Temperance Hill.....	2,449,120	1,560,000.00	63	83	" "	
Pittsburg,.....	....	565,760	237,000.00	41	59	" "	
Pactolus,.....	Yuba Co.....	60,000	26,600.00	44	50	Wm. Ashburner & J. D. Hague.....	
Crawford's Claim,.....	El Dorado Co.....	77,880	35,046.00	45	85	J. J. Crawford.....	1186 ft tunnel in gravel; 10 to 20 ft. above bed-rock.
Pioneer Tunnel,.....	Sierra Co.....	883.37	1,400.53	1.59	.....	Charles Hendel.....	
Green Flat,.....	Plumas Co.....	22,000	15,000.00	67.5	15	Aug. J. Bowie, Jr.	
Fale's Hill,.....	" "	25,000	4,794.49	19	75	" "	
McDoran Claim,.....	" "	5,555	300.00	05.4	20	" "	
Bean's Hill,.....	" "	314	220.00	70	5	" "	Shallow spots.
Jack's Hill,.....	" "	740	37.37	05	8	" "	
Gardner's Point,.....	" "	148,148	118,000.00	79	80	" "	Estimated from best obtainable data.
Light Claim, La Grange,	Stanislaus Co.....	746,640	64,714.27	08.6	48	" "	Banks contained several thick strata of sand.
Kelly Claim,.....	" "	701,685	15,770.34	02.2	100	" "	Pay stratum adjoining bed-rock previously drifted.
French Hill Claim,.....	" "	1,020,347	188,433.11	15.5	30	" "	Originally rich; portion drifted in early days.
Kelly Claim,.....	" "	83,660	3,406.33	04	85	" "	Results obtained from cleaning out a deep hole.
Chesnau Claim,.....	Patricksville, Stanisl's	27,250	11,009.00	40.4	18	" "	Shallow ground.
Chesnau Claim,.....	" " " [Co.	338,880	62,980.37	18 6	60	" "	Virgin ground.
New Light Claim,.....	" " "	667,347	45,511.81	06.8	35	" "	Drifted in placer.
Johnson Claim,.....	" " "	196,632	9,148.27	04.6	30	" "	Virgin ground.
New Claim,.....	" " "	17,796	773 72	04.3	42	" "	Virgin ground.
Trans Baikal Mines,.....	Siberia.....	4,143,280	8,814,216.90	2.12	.....	R. Pumpelly.....	Sluice washings, App. 5, "Across America & Asia."
Riviere du Loup,.....	Canada.....	3,226	4,323.00	1.34	.....	Sir W. E. Logan....	"Geological Survey of Canada," '63, vol. 1, p. 741.
Musa Gold-field,.....	Oshima Prov., Japan..	2,800,000	21,000.00	00.75	.....	Henry S. Munroe..	Trans. Am. Inst. of Min. Engineers, vol. 5, p. 289, also, *Eng. & Min. Journal*, vol. 22, pp. 425, 426.
				Cu. yd. in gms.			
Gold diggings of Miassk, 1829–41,.....	Siberia.....	2,097,592	.....	3.14	.....*.	N. Sewastjanon.....	These results have been calculated from tables published in the Berg- und Hüttenmännische Zeitung. January 19th, 1877. Official report of the Director at Miassk.
Gold diggings of Miassk, 1841–51,.....	"	2,8-9,769	.....	2.85	.....	" "	
Gold diggings of Miassk, 1851–61.....	"	3,861,956	.....	2.00	.....	" "	
Gold diggings of Miassk, 1861–75,...	"	3,716,250	.....	2.46	.....	" "	

* Italics denote mines not worked by the hydraulic method.

Table II. The Gold-fields of Japan, showing the Yield of Gravel per Cubic Yard.

Name of claim.	Location.	No. of cubic meters washed.	Value of 1 cubic meter in cents.	Yield per cubic yard.	Height of banks in feet.	Authority.	Remarks.
Moshibetsu	Kudo Gold-field, Shiribeshi Province, Japan	2	$0 00.42	$0 00.30	5	Henry S. Munroe.	See "Gold-fields of Yesso," p. 35.
Usubetsu	Kudo Gold-field, Shiribeshi Province, Japan	2	0.07	0.05	3	" "	" " "
Otobe	Esashi Gold-field, Oshima Province, Japan	0.25	0.71	0.09		" "	" " p. 42, 43.
Jimikishi	.....	1	10.46	1.31	8	" "	" " "
"	.....	2	1.58	0.20	3.8	" "	" " "
Gokatte	.....	0.50	0.07	0.01	5	" "	" " "
Todo	.....	1	0.42	0.05	4	" "	" " "
Mena	.....	1	0.29	0.04	5	" "	" " "
Sangiurono	Musa Gold-f'ld, Oshima Prov.	7	1.89	1.44	10	.....	" " p. 64.
"	" " [Japan.	2.50	1.31	1.00	6	.....	" " "
Shikubeno	" "	3	1.00	0.75	10 to 12	.....	" " "
Unoshiri	" "	8	0.60	0.46	13	.....	" " "
"	" "	4	0.56	0.43		.....	" " "
Minagoya	" "	7	0.50	0.38		.....	
Toshibetsu Gold-field:					Dpth. gravel tested.		
Upper Toshi	Iburi Province, Japan	1.25	8.11	6.13	4 to 6	Henry S. Munroe.	"These results were obtained by washing measured quantities of gravel in different parts of this field. In measuring, no allowance has been made for the increased bulk due to the loosening of the gravel and to vacant spaces necessarily left between the stones in filling the measuring box." See Report of Henry S. Munroe, M. E., "Gold-fields of Yesso," pp. 23, 24.
Akabuchi	" "	3.00	6.81	5.16	.....	" "	
Kuusube	" "	3.00	4.66	3.53	7	" "	
Highest Terrace	" "	.....	3.00	2.25	35 to 37	" "	
Okajisawa	" "	3.00	4.06	3.07	18	" "	
Ponkajisawa	" "	1.00	1.84	1.40	.....	" "	
Chingkombe	" "	1.00	0.20	0.15	.....	" "	
Nisheumbetsu	" "	1.00	0.01	0.01	5	" "	
Average			5.00	3.77			

Table III. Yield of the Russian Gold-fields for the year 1874.*

Name of Works.	No. places where washing is carried on.	No. cubic yards of gravel washed.	Total yield of gold. Troy pounds.	Yield of gravel per cubic yard washed. Troy grs.
GOVERNMENT WORKS:				
Beresowsk	16	293,198	1,004.88	19.7
Bogoslowsk	28	111,548	646.48	33.5
Miassk	15	384,312	2,260.98	33.8
Nertschinsk	.....	564,944	6,592.23	67.2
PRIVATE WORKS, EST'N SIBERIA:				
District Jenisei:				
Northern Division	104	1,190,022	7,158.26	34.8
Southern Division	110	1,198,116	7,521.39	36.1
Atschinsk	19	168,868	727.70	24.8
Minusinsk	30	318,046	1,423.91	25.8
Kansk and Nischneudinsk	20	115,071	727.84	36.4
Oleksminsk	34	687,332	26,768.18	224.3
Werchneudinsk	13	59,070	264.59	25.8
Bargusinsk	22	155,083	1,702.65	63.2
Nertschinsk	213	852,205	7,493.10	50.6
Wercholensk	1	6,191	17.19	16.01
District of Amur	4	328,707	6,508.40	114.1
WESTERN SIBERIA:				
Marlinsk	78	529,907	2,073.25	22.5
Altai	34	731,774	3,507.31	27.6
Semipalatinski District	19	210,568	407.97	11.2
Akmolenski District	1	137	14	5.9
URAL:				
Government Orenburg	243	791,109	4,575.57	33.3
Government Perm	124	480,194	2,543.17	30.5
Other works in Ural	81	743,525	3,349.78	25.9

RELATIVE YIELD OF HYDRAULIC CLAIMS.

In many districts the yield of the gravel is not figured per cubic yard, but per inch of water used, this being a more convenient and shorter mode of calculation. A record of the quantity of water used is always kept.

The yield per miner's inch is figured under peculiar local con-

* These tables have been calculated from the official statements published in the Berg- und Hüttenmännische Zeitung of April 20th, 1877. The gold pounds have been figured from the Russian doli, which, according to the mint standard, is 750 fine. The number of yards washed has been estimated from the Russian pud. 100 puds have been assumed to equal 1.058 cubic yard. See Berg- und Hüttenmännische Zeitung, January 19th, 1877. On this basis the cubic yard gravel weighs 3397 pounds avoirdupois. The cement gravel of Nevada County, Cal., will approximate 3600 pounds avoirdupois per cubic yard.

ditions and circumstances, which, apart from its own variations, are multifarious in every district; therefore, any comparative estimates of the value of gravel deposits, based on such calculated returns or comparisons of work done per inch of water used in the several mining camps, are exceedingly difficult to make, and in most cases unsatisfactory when obtained. The quantity of dirt moved by any given head of water properly applied is dependent on the height of the banks, character of the gravel, and on the grade and arrangement of the sluices. The value of the ground per cubic yard varies in the different parts of the country, changes even occurring in a claim, the discovery of which is only made after an extensive run and clean up.

To better familiarize the reader with the subject of gravel mining, and enable him to form an idea of the amount of water used per cubic yard of dirt moved, the corresponding yield, and attendant costs, an exhibit of a claim running on an approximate minimum basis, viz., light pressures and smallest practicable grades, has been selected. For this purpose the claims of the La Grange Hydraulic Mining Company have been chosen, as the yield per cubic yard and the grades there used can be considered as nearly the lightest with which a hydraulic claim can yield any remunerative returns.

The annexed tabular statements show, in the most convenient form, the data alluded to.* The tables have been carefully arranged, and the results were obtained at cost of great labor, several examinations and surveys of the ground. The data of the yield and disbursements are accurate. The apportionment of the material account has in some places been calculated *pro rata* per cubic yard from general material account. The measurements of the ground washed were made at each clean-up, and subsequently the entire ground was resurveyed, and the work checked. (See Tables IV, V, VI, VII, and VIII.)

A résumé of the entire work done by this company from June 1st, 1874, to September 30th, 1876, showing gross receipts and total disbursements, including the rebuilding of the dam at the head of the ditch, the construction of roads, ditches, etc., but excluding the purchase of some mining ground, gives the following result:

1,533,728 inches (2159 cubic feet each) washed
2,275,967 cubic yards of gravel, which yielded
$231,893 = 12,026 84 troy ounces.

* In obtaining the data for these tables, I am greatly indebted to the valuable assistance of Mr. Joseph Messerer, superintendent of the La Grange Ditch and Hydraulic Mining Company.

M.

l; Cost and Receipts of Hydraulic Washing from

ATIVE COST PER CUBIC YARD.					BULLION YIELD.						
Blocks & Lumber.	Material.	Water.	Melting and Refining.	Total Cost.	Amalgam. Pounds Av'dp.	Before Melting. Fnds Avoirdupois. Weight	Fineness Gold.	Fineness Silver.	Value of Gold.	Value of Silver.	Total Amount of Bullion Produced.
.....	.....	.....	.....	.....	.....	.....	.....	.....	.....	.....	.....
.....	.....	$0.017	.....	$0.109	121.00	48.00	.921	.....	$13,804.29	$39.29	$13,843.58
.....	.....	.....	.....	.....	.....	.....	.....	.....	.....	.....	.....
.....	.....	.009	.....	.054	58.00	23.00	.936	.055	6,411.13	15.49	6,426.62
.....	.....	.010	.....	.059	70.00	25.75	.934	.051	7,220.39	19.99	7,240.38
.....	.....	.....	.....	.....	.....	.....	.....	.....	.....	.....	.....
.....	.....	.....	.....	.....	117.25	43.31	.938	.054	12,050.93	29.07	12,080.00
.....	.....	.....	.....	.....	.....	.....	.....	.....	.....	.....	.....
.....	.....	.....	.....	.....	103.50	37.25	.921	.056	10,366.59	30.49	10,397.08
.....	.....	.....	.....	.....	.....	.....	.....	.....	.....	.....	.....
$0.0042	$0.0057	.....	$0.0004	.....	30.00	10.50	.928	.055	2,891.58	8.10	2,899.68
.....	.....	.....	.....	.....	73.75	26.68	.951	.047	7,545.31	15.80	7,561.11
.....	.....	.008	.....	.059	17.31	6.44	.941	.052	1,818.34	5.05	1,823.39
.....	.....	.....	.....	.....	.....	.....	.....	.....	.....	.....	.....
.....	.....	.....	.....	.....	46.00	15.44	.919	.057	4,462.84	20.49	4,483.33
.....	.....	.....	.....	.....	63.12	22.68	.940	.050	6,121.78	15.00	6,136.73
.....	.....	.....	.....	.....	.....	.....	.....	.....	.....	.....	.....
.....	.....	.....	.....	.....	.....	.....	.....	.....	.....	.....	.....
.....	.....	.....	.....	.....	105.25	36.44	.936	.052	10,151.95	27.00	10,178.95
.....	.....	.....	.....	.....	.....	.....	.....	.....	.....	.....	.....
.....	.....	.....	.....	.....	31.75	12.09	.936	.054	3,325.67	8.91	3,334.58
.....	.....	.....	.....	.....	.....	.....	.....	.....	.....	.....	.....
.....	.....	.....	.....	.....	.....	.....	.....	.....	.....	.....	.....
.....	.....	.....	.....	.....	.....	.....	.....	.....	.....	.....	.....
.....	.....	.01	.....	.046	42.00	15.25	.926	.059	4,269.76	11.00	4,280.76
$0.0042	$0.0057	$0.104	$0.0004	$0.063	878.93	322.83			$89 940.51	$245.68	$90,186.19

ards moved, yielded 13.8 cents per cubic yard.

Tabular Statement Showing Receipts of Hydraulic Washing from

Year.	Run Commenced.	Months.	End of Run.	Washings. Days.	Washings. Hours.	Amount of Water used in 24 hours M. I.	Grade of Sluices.	Height of Banks.	Water Pressure.	Melting and Refining.	Total Cost.	Bullion Yield. Amalgam. Pounds Avd'p's.	Weight Before Melting. P'nds Avoirdupois.	Fineness. Gold.	Fineness. Silver.	Value of Gold.	Value of Silver.	Total Amount of Bullion Produced.
1875	12	Feb.....	...	.....	.....	.....				.....	.....	.....	.....	.....	.....	.....	.....	.....
		March.	...	.....	.....	.....				.....	.....	.....	.....	.....	.....	.....	.....	.....
	23	April...	22	46	21	42,198				.....	.....	51.00	18.15	.935	.052	$5,115.15	$11.13	$5,126.28
		May....	...	.....	.....	.....				.....	.....	.....	.....	.....	.....	.....	.....	.....
	4	June...	3	30	4	27,152				.....	.....	27.25	10.90	.950	.....	2,926.47	6.65	2,933.12
	16	July ...	15	32	12	29,250				.....	$0.035	32.00	11.20	.928	.055	3,084.63	8.26	3,092.89
		Aug....	...	.....	.....	.....				.....	.....	.....	.....	.....	.....	.....	.....	.....
	11	Sept....	10	49	18	44,784				.....	.....	59.00	21.35	.951	.047	6,035.55	15.00	6,050.55
	15	Oct.....	14	24	14	22,132				.....	.....	35.81	13.33	.941	.052	3,765.64	8.55	3,774.19
		Nov....	...	.....	.....	.....				.....	.....	.....	.....	.....	.....	.....	.....	.....
	2	Dec.....	1	29	3	26,214				.....	$0.0003	31.00	10.41	942	.054	2,760.89	10.05	2,770.94
1876		Jan	...	.....	.....	.....				.....	.....	.....	.....	.....	.....	.....	.....	.....
	7	Feb.....	6	44	4	49,688				.....	.038	72.53	26.06	.940	.050	7,426.10	18.81	7,444.91
		March...	...	.....	.....	.....				.....	.....	.....	.....	.....	.....	.....	.....	.....
	26	April...	25	70	8	79,126				.....	.048	106.25	36.79	.936	.052	10,249.70	27.00	10,276.70
		May....	...	.....	.....	.....				.....	.....	.....	.....	.....	.....	.....	.....	.....
		June...	...	.....	.....	.....				.....	.....	.....	.....	.....	.....	.....	.....	.....
		July ...	...	.....	.....	.....				.....	.....	.....	.....	.....	.....	.....	.....	.....
		Aug. ..	...	.....	.....	.....				.....	.....	.....	.....	.....	.....	.....	.....	.....
		Sept....	26	48	13	54,611				.....	.048	39.50	15.00	.880	.064	3,963.41	11.66	3,975.07
				373	4	375,155	4 in. to 16 ft. Sluices 4 ft. wide 30 in. side.	24 to 60 feet. 27 to 60 feet.	60 feet; 3 pipes, nozzles 6 and 7 inch.		$0.0003	$0.038	454.34	162.89			$42,566.65	$107.06	$45,444.65

Tabular S; Cost and Receipts of Hydraulic Washing from

Year.	Run Commenced.	Months.	End of Run.	Days.	...tive Cost Per Cubic Yard. Blocks & Lumber.	Material.	Water.	Melting and Refining.	Total Cost.	Bullion Yield. Amalgam. Pounds Avd'ps.	Weight Before Melting, P'nds Avoirdupois.	Fineness Gold.	Fineness Silver.	Value of Gold.	Value of Silver.	Total Amount of Bullion Produced.
1874	1	June...	...	[illegible]	.....	.....	$0.004	.....	$0.043	35.00	14.00	.943	.047	$3,958.31	$9.03	$3,967.34
	4	July ...	3	[illegible]	.....	.....	.008	.....	.025	41.00	15.75	.944	.....	4,506.97	6.11	4,513.08
	17	Aug....	15	[illegible]	.....	.....	.007	.....	.052	52.25	19.73	.936	.055	5,497.39	15.49	5,512.88
		Sept....	28	[illegible]	.....	.....	.....	.....	.....	.....	.....	.....	.....	.....	.....	.....
	2	Oct.....	...	[illegible]	.....	$0.0076	.005	.....	.040	63.75	21.88	.934	.051	6,134.53	19.09	6,153.02
	24	Nov....	23	[illegible]	.....	.....	.....	.....	.....	.....	.....	.....	.....	.....	.....	.....
		Dec.....	...	[illegible]	.....	.....	.....	.....	.....	.....	.....	.....	.....	.....	.....	.....
1875		Jan	...	[illegible]	$0.0042	.....	.009	$0.0005	.067	142.00	52.45	.945	.051	14,585.74	43.65	14,629.39
		Feb.....	19	[illegible]	.....	.....	.....	.....	.....	.....	.....	.....	.....	.....	.....	.....
			...	[illegible]	.....	.....	.....	.....	.....	.....	.....	.....	.....	.....	.....	.....
		March.	...	[illegible]	.....	.....	.....	.....	.....	.....	.....	.....	.....	.....	.....	.....
		April...	...	[illegible]	.....	.....	.....	.....	.....	.....	.....	.....	.....	.....	.....	.....
1876	1	May....	...	[illegible]	.....	.....	.....	.....	.....	31.25	11.90	.936	.054	3,273.29	8.88	3,282.17
	6	June...	5	[illegible]	.....	.0031	009	.....	.055	.....	.....	.....	.....	.....	.....	.....
		July ...	...	[illegible]	.....	.....	.....	.....	.....	63.00	24.50	.895	.068	6,544.73	20.58	6,565.31
	6	Aug....	5	[illegible]	.....	.....	.....	.....	.....	.....	.....	.....	.....	.....	.....	.....
		Sept....	...	[illegible]	.....	.....	.013	.....	.050	31 00	11.25	929	.059	3,147.36	10.58	3,157.94
		Oct.....	3	[illegible]	.....	.....	.....	.....	.....	.....	.....	.....	.....	.....	.....	.....
				27	$0.0042	$0.0062	$0.008	$0.0005	$0.055	459 25	171.46			$47,648.32	$133 41	$47,781 73

Tabular Statement Sheeipts of Hydraulic Washing from

Year.	Run Commenced. Months.	End of Run. Days.	Washings. Hours.	Amount of Water used in 24 hours M. I.	Grade of Sluices.	Height of Banks.	Water Pressure.	Melting and Refining.	Total Cost.	Bullion Yield. Amalgam. Pounds Avd'ps.	Weight Before Melting. Pn'ds Avoirdupois.	Fineness. Gold.	Fineness. Silver.	Value of Gold.	Value of Silver.	Total Amount of Bullion Produced.
1873	1 March....															
	22 April...	21	22 13	18,040						20.25	7.20	.935	.052	$2,026.26	$7.30	$2,033.50
	May....															
	3 June....	2	27 5	21,770						13.50	5.25	.950	.....	1,447.97	4.75	1,452.72
	17 July ...	16	33 6	26,604						22.00	7.60	.928	.055	2,092.27	6.54	2,098.71
	Aug....							$0.0004	$0.037							
	10 Sept....	9	24 12	19,600						13.75	4.97	.951	.047	1,404.14	4.35	1,408.49
	10 Oct.....	9	11 12	9,200						5.31	1.98	.941	.052	557.66	2.95	560.61
	Nov....															
	Dec....	16	20 2	16,064						16.00	5.20	.935	.050	1,558.87	5.21	1,594.08
			139 2	111,278	3½ in. to 16 ft.	20 to 40 feet.	80 feet.	$0.0004	$0.037	90.81	32.20			$9,117.17	$31.10	$9,148.27

Tabular Statement Sheeipts of Hydraulic Washing from

Year.	Run Commenced. Months.	End of Run. Days.	Washings. Hours.	Amount of Water used in 24 hours M. I.	Grade of Sluices.	Height of Banks.	Water Pressure.	Melting and Refining.	Total Cost.	Bullion Yield. Amalgam. Pounds Avd'ps.	Weight Before Melting. Pn'ds Avoirdupois.	Fineness. Gold.	Fineness. Silver.	Value of Gold.	Value of Silver.	Total Amount of Bullion Produced.
1874	28 May....															
	June....															
	14 July...	3	17 18	17,208					$0.033	32.00	11.75	.943	.047	$3,320.74	$9.00	$3,329.74
	13 Aug	12	16 16							36.00	13.50	.940	.....	.....	.....	3,801.11
	Sept....	24	15 17	7,854					.074	32.50	12.27	.936	.055	3,413.20	15.51	3,428.71
	5 Oct.....							0.0007								
	20 Nov....	18	19 22	9,958					.046	43.25	14.85	.934	.051	4,158.40	18.96	4,177.36
	Dec....															
1875	Jan.....	21	37 10	18,708					.032	53.00	19.57	.941	.050	5,445.60	14.55	5,460.15
			107 11	53,728	3½ in. to 16 ft.	20 to 40 feet.	90 feet.	0.0007	$0.039	196.75	71.94			$16,337.94	$58.02	$20,197.07

6.

DISBURSEMENTS.

Water,	$17,807 62	Contingent,	$8,125 80
Labor,	82,345 70	Taxes,	1,130 41
Material,*	21,788 85		
Officials,	11,244 94		$136,942 82

Average value of the oz. metal, gold and silver, ... $19 29
Total cost per oz. metal produced, ... 11 38
Distributed as follows:

Water, per ounce,	$1 43	Contingent,	$0 26
Labor,	6 85	Taxes,	09
Material,	1 81		
Official,	94		$11 38

Total cost of hydraulic washing per cubic yard is, ... $0 06
Distributed as follows:

Water,	$0 008	Official and contingent,	$0 006
Labor,	036		
Material,	010		$0 060

Average yield per cubic yard, ... $0 1019
Average amount of gravel washed per inch water, cubic yards, . . . 1.48

The following tabular statement shows the workings of a mine on four per cent. grades, high banks, and with great hydrostatic pressure. The advantages of heavy grades and pressure, over the minimum La Grange grades, are clearly shown by the quantity of material moved, and a comparison of the work and costs will be of interest to those engaged in hydraulic mining. (See Tables IX and X.)

Table IX. No. 8 Claim, North Bloomfield Gravel Mining Company.†

Year.	Length of run. Days.	Washings commenced.	Washings ended.	Amount of water used. Miner. inches.	Grade of sluices.	Depth of banks.	Cub. yards gravel washed.	Gross yield.‡	Total costs.§	Cub. yards gravel washed per inch of water.	Relative yield. In cents. Per inch water.	Relative yield. In cents. Per cubic yard.	Relative cost. In cents. Water per cub. yard.	Relative cost. In cents. Labor, etc., per cubic yard.
1874–5	295	Jan. 1	Oct. 14	386,972	6½ in. to 12 ft.	180 ft.	1,858,000	$74,271.77	$53,088.83	4.80	19.1	4.0	.77	2.07
1875–6	342	Nov. 13	Oct. 18	700,000	"	260 ft.	2,919,700	192,735.73	94,823.75	4.17	27.5	6.6	.74	2.45

* Material account excludes $8807.81 on hand.
† For details see Reports of the North Bloomfield Gravel Mining Company for years 1874–6.
‡ Less cost of melting and refining.
§ Exclusive of costs of melting and refining.

Table X. Statement of Disbursements and Relative Costs per Cubic Yard.

	1874-5	1875-6	1874-5	1875-6
Labor account	$22,790.39	$40,975.85	$0 0122	$0 0140
Blocks and lumber	3,007.26	5,212.62	.....	.....
Explosives	2,944.94	10,279,73	0 0032	0 0053
Material account	5,663.80	9,249.96	0 0030	0 0031
General expense account	4,201.89	7,364.12	0 0022	0 0025
Water	14,480.40	21,740.97	0 0077	0 0074
	$53,088.82	$94,823.25	$0 0203	$0 0323

1875-6—Gold bullion, ounces, ... 10,401.28
Value per ounce, gold and silver, ... $18 53
Total cost per ounce, ... 9 08
Distributed as follows:

Labor, ...	$3 93	General expense, . . .	$0 70
Blocks and lumber, . . .	50	Water, ...	2 09
Explosives, ...	98		
Material, ...	88		$9 08

CONCLUSION.

The question of the yield and costs of working hydraulic claims is one of great interest to the engineer. In estimating the production of gravel mines, the calculation of a given number of cents per cubic yard refers to the entire quantity of gravel moved or to be moved, since it is impracticable to wash out the gold-bearing strata without moving the entire superincumbent mass. The yield is, therefore, apportioned to the total quantity of ground washed.

Having prospected a claim, and ascertained the approximate value of the gravel per cubic yard, grade and quantity of available water being known, its yield can be estimated for a reasonable period.

In discussing the question of working unexplored localities, and even those already developed, it is to be observed that there are no known means which enable one to predetermine accurate economical results.

Therefore, in estimating the yield of gravel properties, even under the best of circumstances, the most careful opinion drawn from immediate facts is, owing to the nature of deposits, necessarily qualified.

THE STRENGTH OF WROUGHT IRON AS AFFECTED BY ITS COMPOSITION AND BY ITS REDUCTION IN ROLLING.

BY A. L. HOLLEY, PH.B., M.I.C.E., NEW YORK CITY.

(Read at the Philadelphia Meeting, February, 1878.)

THIS paper is an abstract and a discussion of results obtained by the United States Test Board in experiments upon 14 brands of wrought iron, most of which are well known and of high repute.* The iron was all intended for chain-cables; it was tested in the form of bars, usually of nine sizes, from 1 inch to 2 inches round, and also in the forms of single links and short chains. Not less than 2000 tensile tests were made, each showing elastic limit, elongation, and reduction of area. This work was done with conspicuous intelligence and fidelity, at the Washington Navy Yard, by Commander L. A. Beardslee. Some important practical results and principles which he has developed, and others which he has confirmed, will be referred to. The chemical part of this work consists of 42 complete analyses (including slag), by Mr. Blair, chemist to the Board.

EFFECTS OF COMPOSITION ON STRENGTH.

Variations in the physical qualities of iron may be due to different composition, or to different treatment in manufacture, or to both these complex causes. In order to determine the specific causes of variation, one class of altering conditions should be made to vary largely, while the other classes should be kept uniform. Then another class should be varied, and so on, until the value of each is ascertained. As all the irons under consideration were intended to have that purity and refinement which was deemed indispensable in chain-cables, their chemical analyses are perhaps more important in proving that physical variations result chiefly from treatment, than in pointing out the specific effects of certain ingredients. While the subject of treatment—especially the increase of strength by greater reduction in rolling—may be the more important one, it can be best appreciated after we have familiarized ourselves with the general chemical and physical characters of the irons. The typical facts are given in the following tables.

* As the present object of the Board is not to compare the products of different makers, but to discover the physical effects of various composition and treatment, the irons are designated by letters rather than by their trade names.

Table I. Analyses of Irons Used in Making Chain Cables.

Iron. Size.	Sulphur.	Phosphorus.	Silicon.	Carbon.	Manganese.	Copper.	Cobalt.	Nickel.	Slag and oxide of iron.
A 2	0.007	0.178	0.139	0.021	0.031	0.172	0.068	0.078	1.210
B 1 7-16	0.008	0.231	0.156	0.015	0.017	0.038	0.047	0.037	.....
C 1½	0.007	0.169	0.154	0.042	0.021	0.046	0.029	0.031	.....
D 1	0.005	0.239	0.171	0.028	0.029	0.008	0.023	0.028	0.570
D 2	0.009	0.191	0.185	0.045	0.097	0.012	0.023	0.026	0.546
D 1½, lot 1	0.005	0.118	0.135	0.020	0.071	0.016	0.023	0.029	.....
D 1½, lot 2	0.005	0.158	0.108	0.024	0.038	0.018	0.031	0.026	.....
D 2, Nov. '76	0.005	0.213	0.163	0.035	0.021	0.007	0.023	0.028	0.874
E 1¼	0.013	0.181	0.159	0.018	0.021	0.054	0.044	0.042	.....
F 1¼	0.004	0.201	0.158	0.026	0.048	0.002	0.018	0.028	0.650
Fx 1⅛, lot 1	0.004	0.187	0.163	0.032	0.031	0.010	0.026	0.013	.....
Fx 1, lot 2	0.004	0.197	0.170	0.033	0.045	0.008	0.037	0.037	.....
Fx 1¼, lot 3	0.004	0.193	0.170	0.028	0.039	0.006	0.042	0.042	.....
J 1 7-16	0.003	0.140	0.182	0.027	Trace.	0.004	Trace.	0.008	1.120
J 1⅝	0.005	0.291	0.321	0.034	0.029	0.011	0.013	0.013	1.026
J 1 11-16	0.005	0.223	0.295	0.035	0.029	0.009	0.003	0.008	0.678
J 1¾	0.003	0.213	0.303	0.051	0.007	0.011	0.013	0.008	1.230
J 1½	0.004	0.154	0.257	0.033	0.053	Trace.	Trace.	0.013	1.724
K	0.005	0.161	0.156	0.062	0.018	0.048	0.016	0.049	0.540
K 1¾	0.006	0.134	0.143	0.071	0.021	0.046	0.013	0.037	0.354
L 1½	Trace.	0.065	0.105	0.453	0.006	0.008	Trace.	0.011	0.326
L 1 7-16	Trace.	0.073	0.098	0.328	0.005	0.008	0.013	0.013	0.192
L 1⅝	Trace.	0.067	0.098	0.512	0.029	0.010	0.010	0.016	0.308
L 1 11-16	Trace.	0.074	0.080	0.212	0.014	0.006	0.010	0.013	0.452
L 1 13-16	Trace.	0.084	0.093	0.248	0.016	0.008	0.008	0.018	0 376
L ¾	0.001	0.089	0.103	0.229	0.019	0.007	0.015	0.018	0.388
L ⅝	0.004	0.232	0.175	0.042	0.040	0.006	0.026	0.026	0.668
M 1¼	0.005	0.248	0.174	0.026	Trace.	0.314	0 110	0.340	1.096
M 1⅜	0.015	0.233	0.204	0.034	0.059	0.370	0.058	0.029	0.884
M 1⅜	0.007	0.317	0.259	0.039	0.021	0.374	0.098	0.175	1.034
M 1½	0.008	0.219	0.159	0.063	0.022	0.328	0.052	0.039	0.674
M 1⅝	0.010	0.221	0.164	0.064	0.031	0.340	0.053	0.034	0.828
M 1½, weld end.	0.005	0.211	0.182	0.055	Trace.	0.324	0.104	0.246	0.994
M 1½, butt end.	0.006	0.209	0.203	0.055	Trace.	0.322	0.097	0.243	1.078
M 1⅜, weld end.	0.008	0.263	0.177	0.034	Trace.	0.430	0.090	0.313	1.382
M 1⅜, butt end.	0.007	0.269	0.261	0.028	Trace.	0.422	0.087	0.303	1.738
N 1⅛	0.004	0.190	0.159	0.055	0.026	0.036	0.026	0.018	1.258
N 2	0.006	0.192	0.169	0.028	0.050	0.028	0.031	0.028	2.262
O 1	0.004	0.067	0.065	0.045	0.007	0.046	0.033	0.034	1.168
O 1¾	0.005	0.078	0.073	0.042	0.005	0.046	0.034	0.037	0.974
P 1	0.009	0.250	0.182	0.033	0.033	0.081	0.037	0.057	0.848
P 1¾	0.001	0.095	0.028	0.066	0.009	0.008	0.020	0.023	1.214

PROPORTION OF TENACITY OF SINGLE LINKS TO TENACITY OF BARS.

	$1\frac{1}{8}$	$1\frac{1}{4}$	$1\frac{5}{16}$	$1\frac{3}{8}$	$1\frac{7}{16}$	$1\frac{1}{2}$	$1\frac{5}{8}$	$1\frac{11}{16}$	$1\frac{3}{4}$	$1\frac{13}{16}$	$1\frac{7}{8}$	2	Averages.
5	176.5	168.4	..	170.8	..	172.8	165.	..	174.	..	179.	181.	173.8
	..	..	..	..	177.2	..	..	180.1	..	169.	..	..	175.4
	..	..	..	..	178.	191.4	189.6	177.6	199.	172.8	..	..	183.1
	178.2	173.6	..	168.4	..	172.9	166.4	..	175.8	..	..	..	171.7
	176.3	181.	..	175.7	..	193.4	179.2	..	182.6	..	167.6	172.	178.5
	..	..	..	..	185.6	186.	187.7	183.2	178.4	180.9	..	..	183.6
	158.9	169.1	..	170.2	..	164.	175.1	..	182.2	..	168.2	..	168.9
	163.	175.8	..	176.2	..	166.	175 8	..	172.4	..	158.	..	169.6
	..	..	..	..	179.6	174.4	183.2	171.	174.	172.	..	..	175.7
	..	..	..	..	..	183.4	188.	..	176.4	..	..	..	182.6
	..	..	..	..	187.8	174.6	109.6	174.8	173.8	155.	..	..	162.6
	160.3	172.9	..	159.3	179.2	163.5	166.7	174.1	173.4	..	..	..	168.7
	..	..	..	..	128.4	156 6	116.2	180.	175.6	160.	..	..	152.
	..	185.4	..	149.9	..	171.1	137.8	..	..	..	..	..	160.9
	..	160.5	163.1	152.7	..	166 8	169.6	162.1	154.9	164.8	..	162.1	161.8
	..	178.4	160.	..	..	..	..	..	..	..	..	..	169.2

Table III. Relative Values of Irons in Bars in tenacity, red. of area and elon., and in Proportion of Chain to Bar.

Order of value.	Tensile strength.		Reduction of area.		Elongation.		Proportion of tenacity of short chain to that of bar.		Order of value.
	Iron.	Lbs. per sq. inch.	Iron.	Per cent.	Iron.	Per cent.	Iron.	Per ct.	
1	L	66.598	O	54.2	Px	29.9	B	168.2	1
2	K	58,050	A	49.0	E 2	27.7	A	168.1	2
3	D 2	56,675	Px	48.9	P	23.2	O	165.7	3
4	C 2	56,001	F	48.1	O	22.7	Px	163.9	4
5	M	55,683	D 1	47.8	A	22.2	F	163.2	5
6	P	54,363	P	46.6	Fx 2	22.0	D 2	158 3	6
7	N	54,329	Fx 2	46.2	F	21.9	Fx 3	157.5	7
8	Fx 1	54,271	E 2	45.8	Fx 1	21.8	C 2	156.8	8
9	Px	54,270	Fx 1	45.3	M	21.0	N	155.8	9
10	D 1	53,292	E 1	45.0	D 2	20.9	P	154.5	10
11	Fx 2	53,107	D 2	43.8	N	20.2	Fx 1	151.4	11
12	B	52,764	C 1	40.6	D 1	18.2	M	150.7	12
13	A	52,579	M	38.2	C 2	18.0	K	141.6	13
14	E 1	52,533	C 2	38.1	K	17.9			
15	E 2	52,471	K	38.0	B	17.2			
16	J	51,754	B	36.1	C 1	16.4			
17	F	51,192	N	33.0	E 1	15.3			
18	O	51,134	L	30.4	J	12.6			
19	C 1	50,765	J	25.9	L	8.3			

Table IV. Relative Values of Irons. Average for Bars, Short Chains, and Single Links.

Order of value.	1	2	3	4	5	6	7	8	9	10	11	12	13
Tenacity	K	D 2	C 2	M	P	N	Px Fx 1	.....	Fx3	B	A	F	O
Reduction of area	O	A	Px	F	P	Fx 3	D 2	Fx 1	M	C 2	K	B	N
Elongation	Px	P	O	A	Fx 3	F	Fx 1	M	D 2	N	C 2	K	B
Welding value*	B	A	O	Px	F	D 2	Fx 3	C	N	P	Fx1	M	K
Resilience	A	Fx 3	Fx2	F O	.....	D 2	P C 2	.....	Px B	.....	M	K	N

Table I. Analyses of the irons.

Table II. Abstracts of physical tests of irons, and proportions of strength of links to that of bars.

Table III. Relative values of irons in bars, in tenacity, reduction of area, and elongation, and in proportion of chain to bar.

Table IV. Relative values of irons. Average for bars, short chains, and single links.

Table V. Showing effects of variation of reduction and of uniformity of reduction on strength.

* Iron L, bars of which exceeded all others in tenacity, when tested in single links only, gave the lowest welding value.

In the Report of the Board, under the head of Phosphorus, the leading chemical and physical facts about each iron likely to be affected by this element are compared, and then the group of irons is considered, and a conclusion is reached; under the head of Silicon the irons are again gone over in a similar manner, and so on with Carbon and other ingredients. A description of a few irons in which composition should have the greatest influence on strength will suffice to introduce these conclusions.*

Effects of Phosphorus.

Iron **O**. P., 0.07, Si., 0.07, C., 0.04. Slag medium.
Chemical impurities all very low.
The iron had been thoroughly worked.
Tenacity as bar and as link very low.
Ductility as bar and as link very high.
Welds very good.

Low phosphorus does not alone account for these qualities. Iron **F** with P., 0.20, Si., 0.16, and C., 0.03, has about the same tenacity and welding power, and approaches the same ductility. Iron **P** with P., 0.17, Si., 0.10, and C., 0.05, has about equal ductility. Seeing that the thorough working of the small bars decreased welding power, as compared with that of the less compressed large bars, it is probable that method of manufacture is an important factor in all physical results. The effects of low phosphorus are not conspicuous.

Iron **P**., P., 0.17, Si., 0.10, C., 0.05. Slag very low.
P., and C., medium; other impurities rather low.
Tenacity high as link and as bar.
Ductility high as link and as bar.
Welding power medium.

Iron properly worked for tenacity and durability, but overworked for welding. (See iron **Px**.)

This iron had the highest average of good qualities, and was the best for general constructive purposes. The characteristic effects of phosphorus are shown by the behavior of two specimens of iron **P**, viz.:

1 in. bar, P., 0.25, had tenacity 58,000 lbs., and elongation 14 per cent.

* It is hoped that those who are interested in this subject will analyze these data, and point out new readings and missing links in the evidence, if such there may be.

1¼ in. bar, P., 0.09, had tenacity 53,000 lbs., and elongation 24 per cent.

But this increased tenacity and decreased ductility of the 1 in. bar are not due to P. alone; it had Si. 0.18 against Si. 0.03 in the larger bar, and it had more reduction in rolling. Phosphorus 0.17 may thus accompany the highest general value; that this element did not cause inferior welding, may be inferred from the fact that iron **Px**, made of the same materials and in the same way, except that one course of piling and hammering was omitted, welded much better, although its tenacity and ductility were decreased.

Iron **D**, P., 0.18 (0.12 to 0.24); Si., 0.15; C., 0.03; slag low.
Carbon low; other impurities medium.
Different bars very differently worked.
Tenacity high as bar and link.
Ductility below medium as bar and link.
Welds very good.

There are various proofs that low phosphorus, even with low silicon, do not make high ductility, and that the amount of reduction is the more important factor. For instance:

1 in. bar, P., 0.24, Si., 0.17, has tenacity 61,000 lbs.; elongation, 26 per cent.
1½ in. bar, P., 0.16, Si., 0.11, has tenacity 56,000 lbs.; elongation, 28 per cent.
2 in. bar, P., 0.19, Si., 0.18, has tenacity 51,000 lbs.; elongation, 18 per cent.

The welds of the medium-sized and worked bars were best, but all were good. No harmful effect of phosphorus can be traced in this iron.

Iron **B** welded best, and had P., 0.23, and C., 0.015.
Iron **F**. P., 0.20; Si., 0.16; C., 0.03; slag low.
Carbon low; other impurities medium.
Iron suitably worked for welding, and very uniform.
Tenacity as bar and as link very low.
Ductility high.
Welding power good.

The remarkable uniformity of this iron proves it to have been made with great care from selected materials. Why its tenacity is so low it is difficult to say on chemical grounds. The same iron, **Fx**, more worked, gives a medium tenacity, with substantially the same analysis. Iron **A**, with less P., Si., and C., is stronger. Iron **E** has lower P., the same Si., and only 0.02 C., and yet a higher tenacity.

Iron **Fx** (**F** more worked). P., 0.19; Si., 0.17; C., 0.03.
Ingredients substantially the same as in **F**.
Iron much more worked than **F**.
Tenacity medium in link and bar.
Ductility good.
Welding power below medium.

Iron **B**, P., 0.23; Si., 0.16; C., 0.015.
P. rather high; Si. medium; and C. very low.
Iron not sufficiently worked for strength.
Tenacity rather low.
Ductility quite low.
Welds very good.

Notwithstanding the extremely low C., the iron was not ductile. P. may well account for this, but not for low tenacity, as some of iron **P** had more P. and much higher tenacity. Low C. may partly account for low tenacity and good welds, but small reduction seems to be an equal cause. High P. did not prevent excellent welding.

Iron **M**, P., 0.25 (0.21 to 0.32); Si., 0.20 (0.16 to 0.26); C., 0.04; Ni., 0.18 (0.03 to 0.34); Cu., 0.34 (0.13 to 0.43); slag various.

P. rather high; Si. above medium; copper and nickel high; C. rather low.

The amount of work the iron received can only be inferred from the sizes of the bars.

Tenacity considerably above average.
Ductility average.
Welds weak.

The character of this iron is so complex, and its physical character varies so much in the same sized bars, that no satisfactory analysis of the data can be made. It seems certain, from a comparison of the tables, that neither copper, nickel, cobalt, nor slag materially affected strength; the effects of these ingredients on welding will be considered under another head.*

Conclusions about Phosphorus.—The best of these irons average: P., 0.15 to 0.20. The extreme limits are 0.065 and 0.317. A soft

* Chromium occurs only in iron M, four analyses of which show Cr. 0.061 to 0.089. As this element is known to increase the tenacity of steel, it may have brought iron M, up to a good standard of tenacity, without helping its other structural qualities. These experiments give no absolute evidence as to the effects of chromium; but it may be said that when mere tenacity is made the criterion of fitness, an untrustworthy iron like M, may be "physicked" in various ways to meet *that* requirement.

boiler-plate steel might have the former amount; the latter would give high tenacity and brittleness to even a low-carbon steel. The investigations have been made so difficult by the chemical similarity and general purity of most of the irons, and by their various degrees of reduction in rolling, that the effect of phosphorus cannot be independently traced. While special bars having chemical and structural conditions otherwise similar, seem to be increased in tenacity and brittleness by high phosphorus, other bars low in this element are not the mildest. Of one iron, a 1 in. bar, with P. 0.25, had 5000 lbs. more tenacity per square inch and 10 per cent. less stretch than a 1¼ in. bar with P. 0.09. But the 1 in. bar had also silicon 0.18, while the 1¼ in. had Si. 0.03; and the smaller bar received greater reduction and strength in rolling, as we shall see farther on.

The phosphorus (average in each iron) in the irons likely to be affected by it, runs very irregularly as follows, beginning with the highest of the following physical values: *Tenacity*, P., 0.18, 0.17, 0.25, 0.17, 0.19, 0.19, 0.20, 0.18, 0.20, 0.07. *Reduction of area*, P., 0.07, 0.18, 0.20, 0.19, 0.18, 0.20, 0.19, 0.16, 0.17, 0.25, 0.23, 0.19. *Elongation*, P., 0.18, 0.07, 0.18, 0.20, 0.20, 0.19, 0.25, 0.16, 0.19, 0.17, 0.23.

It may be generally stated that phosphorus 0.20, with carbon about 0.03 and silicon under 0.15, gave the best chain cable irons of this group, although low tenacity and high ductility are the chief requirements of such irons.

The effects of the different constituents on welding will be considered under that head.

Effects of Silicon.

See foregoing descriptions of irons **O**, **P**, **F**, and **M**.

In iron **F**, which is among the highest in silicon, did this element cause the very low tenacity despite the fair amount of P. (0.20)? If so, Si. must affect tenacity more than it affects ductility. But this is not the fact. In iron **J** ductility as well as tenacity is reduced very low by high Si. (0.27).

Iron **J**, Si., 0.27 (0.18 to 0.32); P., 0.20; C., 0.035. Slag average.
Silicon high; other impurities medium.
Iron not overworked.
Tenacity very low in bar and link.
Ductility very low in bar and link.
Weld rather bad.

There was no apparent chemical or physical cause for this low strength, except excessive silicon. Under sledge blows the bars split as often as they broke off, and the faces of the fracture were like layers of charcoal, although both carbon and slag were medium.

Conclusions about Silicon.—No ingredient of *steel* is less understood than this one. The technical managers of the Terrenoire Works in France, who have been notably successful in their steel manufactures founded on chemical induction, especially in the manufacture of sound steel castings which contain a large amount of Si., believe that this ingredient, up to the amount contained in most of the irons we are considering, does not decrease the tenacity or ductility of steel. And it is true that good steels are made by various processes with as much as 0.20 Si. It is believed by the Terrenoire managers that silica is the cause of the bad effects usually attributed to silicon. The table of analyses will show that, in this case, the ore has not been mistaken for the metal. The slag, which contains the silica, has been separately determined. Why wrought iron should differ from steel in respect of the effects of Si. we have not so far been able to determine, if, indeed, it does so differ. It can only be said, with reference to this series of experiments, that there is an apparent decrease of strength due to an excess of this element, while the effects of medium amounts of it are overshadowed by larger causes. The extremes of Si. were, 0.028 and 0.321. In the best irons it averaged about 0.15. It ran as follows, with a regularly decreasing order of value in *Tenacity*, Si., 0.11, 0.15, 0.20, 0.10, 0.16, 0.16, 0.17, 0.14, 0.27, 0.16, 0.07. *Reduction of area*, Si., 0.07, 0.14, 0.16, 0.14, 0.10, 0.17, 0.16, 0.11, 0.15, 0.20, 0.16, 0.27. *Elongation*, Si., 0.10, 0.07, 0.14, 0.17, 0.16, 0.16, 0.20, 0.11, 0.16, 0.14, 0.15, 0.16, 0.27.

Effects of Carbon.

See foregoing remarks on iron **B**, in which C. is extremely low.

Iron **L**, C., average 0.35, highest 0.51; P., 0.10; Si., 0.10. Slag low.

Carbon very high; other impurities quite low.

Tenacity as bar highest.

Ductility as bar and link lowest.

Welding power most imperfect, decreasing as C. increases.

The following table, from a paper by Wm. Hackney, Esq.,* is

* Read before the Institution of Civil Engineers, London, April, 1875.

valuable in this connection, as showing the amounts of C. in various well-known brands of wrought iron and steel:

PERCENTAGES OF CARBON IN SOME VARIETIES OF IRON AND STEEL.

Series of the Irons.

Description.	Percentage of Carbon.
Soft puddled iron,	trace*
Armor plates,	0.016†
	0.033†
	0.044†
Iron rail,	0.09‡
Lowmoor boiler plate,	0.10‡
Staffordshire boiler plate,	0.19†
Russian bar iron,	0.272†
	0.340†
Swedish iron bar,	0.054†
	0.087†
	0.386†
Steely puddled iron,	0.30 to 0.40‡
Iron made by Catalan process direct from the ore,	traces†
	0.420†
Soft puddled steel,	0.501†
Puddled steel rail,	0.55‡
Hard puddled steel,	1.380†

Series of the Steels.

Description.	Percentage of Carbon.
Extra soft Fagersta Bessemer steel,	0.085ȝ
Extra soft Dowlais Bessemer steel,	0.185‖
Crewe boiler-plate steel, Bessemer process,	0 22 to 0.24¶
Locomotive crank-axles, Seraing Bessemer steel,	0.81‡
	0.49‡
Locomotive crank-axle, by Vickers, Sheffield,	0.46*
Rails and tires,	0.30 to 0.50
Bessemer spring steel,	0.45 to 0.55‡
Crucible steel:	
For masons' tools,	0.6*
For chipping chisels,	0.75*
Crank axle (by Krupp),	1.05‡
Gun (by Krupp),	1.18†
For flat files,	1.20*
Forged Indian wootz,	1.645†

Iron **L** is, therefore, a so-called puddled steel, or more properly a weld-steel. Since its impurities, other than C., are so small, it is impossible to avoid the conclusion that C. is the cause of its marked physical character. This is more plainly shown by the following:

1½ in. bar, C. 0.45, has 70,000 tension and 6.5 per cent. elongation.
1⅝ in. bar, C. 0.51, has 67,000 tension and 6.5 per cent. elongation.
C. 0.21 to 0.25 has average 58,000 tension and 18 per cent. elongation.

Iron **K**, C., 0.07; P., 0.15; Si., 0.15; slag low.
C. slightly high; other impurities medium.
Iron well worked and very uniform.
Tenacity as bar and link very high.
Ductility below medium.
Welding power quite low.

The ductility was very fair when the bar was not nicked. The fracture was fine and silvery, like that of low steel. These facts, and the medium amounts of other impurities, point to C. as the harden-

* A. Willis. † J. Percy. ‡ A. Greiner.
ȝ D. Forbes. ‖ Snelus. ¶ F. W. Webb.

ing element. Irons having similar amounts of P. and Si., and low carbon, like irons **A** and **C**, have lower tenacity and higher ductility.

Iron **E**, C., 0.018; P., 018; Si., 0.16.

C. very low; other impurities medium.

Tenacity below average.

Ductility high.

Welding power pretty good.

These phenomena seem to be connected with low carbon.

Conclusions about Carbon.—So much is known concerning the influence of C. on both wrought iron and steel, that there is little danger of falling into error about it. The irons under consideration have C. almost exclusively low and pretty uniform; the exceptional cases give very marked physical results, especially iron **L**, which is the only one really high in C. The other irons ranged between 0.015 and 0.07. Carbon ran with the following decreasing order of value in *Tenacity*, C., 0.35, 0.07, 0.042, 0.04, 0.05, 0.04, 0.032, 0.033, 0.015, 0.02, 0.018, 0.03. *Reduction of area*, C., 0.02, 0.03, 0.05, 0.033, 0.018, 0.032, 0.04, 0.04, 0.07, 0.015, 0.04, 0.35. *Elongation*, C., 0.05, 0.02, 0.033, 0.03, 0.032, 0.04, 0.04, 0.07, 0.015, 0.04, 0.35.

It seems thus easy to vary the physical qualities of puddled iron by carbon; but whether or not it is easy to *uniformly* vary the carbon in puddled iron, the checkered history of the "puddled-steel" process will show. As we shall observe farther on, for uses in which the value of an iron depends on the strength of the particular kind of weld given to these links, C. must be under 0.04. But for uses in which the strength of the bar is the measure of fitness, C. may run up to 0.50 or more.

Manganese is so very low in all these irons that its effects cannot be traced. It is highest in one lot of iron **D**, viz., 0.097; but even this could have little effect, in view of the fact that Mn. is often three times as high in very soft steels, and sometimes runs above one per cent. in low structural steels. Mn. seems to toughen steel, and to make it cast sound; its hardening effect up to Mn. 0.20 to 0.30 is slight.

Copper is very low in all the irons, except **M** (Cu. 0.31 to 0.43), which has about the average tenacity and ductility. Cu. is next highest (Cu. 0.17) in iron **A**, which has rather low tenacity, but very high ductility, on account of its low carbon (C. 0.02). These experiments furnish no evidence that copper affects strength. Its effect on welding will be farther considered.

Nickel was only high (Ni. 0.34) in some of the bars of iron **M**, but did not appear to affect their strength. That it may have helped their welding capacity is farther referred to.

Cobalt was so low (Co. 0.11 maximum) that its effects on strength could not be traced. Possibly copper may have been neutralized by Ni. and Co. in its effect on strength, but these data are not evidence one way or the other.

Sulphur was extremely low in all the irons, S. 0.046 being the highest percentage in one lot of iron **M**. So little S. did not affect welding power, as we shall observe farther on; and it could hardly impair strength, when irons red-short from much S. are usually strong.

Slag.—This averages about 1 per cent. It is lowest in iron **L** (slag 0.38), and highest in the 2-inch bar of iron **N** (slag 2.26). This bar had 51,700 lbs. tenacity, and 8.7 per cent. elongation; while the $1\frac{1}{8}$ inch bar of iron **N**, with 1.258 slag, had 56,000 lbs. tenacity, and 21.7 per cent. elongation. Was this the result of too little work on the larger bar, or of the slag *per se*? Is the presence of much slag merely an indication of too little work—of a loose structure resulting from too little condensation of the fibres? Or does the slag, as slag, or dirt, exert an independent weakening influence? Referring to the table of analyses we find:

Iron.	Size.	Slag.	Iron.	Size.	Slag.
L	$\frac{5}{8}''$	0.668			
L	$\frac{3}{4}''$	0.388	O	$1\frac{1}{4}''$	1.096
L	$1\frac{7}{16}''$	0.192	O	$1\frac{3}{4}''$	0.974
L	$1\frac{1}{2}''$	0.326	P	1 ''	0.848
L	$1\frac{5}{8}''$	0.308	P	$1\frac{3}{4}''$	1.214
L	$1\frac{11}{16}''$	0.452	D	1 ''	0.570
L	$1\frac{13}{16}''$	0.376	D	2 ''	0.546

It appears that the smallest and most worked iron often has the most slag. It is hence reasonable to conclude that an iron may be dirty and yet thoroughly condensed; and it therefore seems probable that the $1\frac{1}{8}$ inch bar of iron **N** was 4300 lbs. stronger than the 2-inch bar, partly because it had 1 per cent. less slag. The 1-inch bar of iron **P** had nearly 58,000 lbs. tenacity, while the $1\frac{3}{4}$ bar, with 0.40 more slag, had a little less than 53,000 lbs. tenacity. It is, however, impossible to establish any close conclusions from these small variations of slag. The investigation requires analyses of irons equally worked, some of the specimens being purposely made very dirty.

WELDING.

Before comparing the irons under this head, it may be well to briefly consider the heretofore ascertained facts, and the speculations which grow out of them. The generally received theory of welding is that it is merely pressing the molecules of metal into contact, or rather into such proximity as they have in the other parts of the bar. Up to this point there can hardly be any difference of opinion, but here uncertainty begins.

What impairs or prevents welding? Is it merely the interposition of foreign substances between the molecules of iron, or of iron and any other substance which will enter into molecular relations or vibrations with iron? Is it merely the mechanical preventing of contact between molecules, by the interposition of such substances? This theory is based on such facts as the following: 1. Not only iron but steel has been so perfectly united that the seam could not be discovered, and that the strength was as great as it was at any point, by accurately planing and thoroughly smoothing and cleaning the surfaces, binding the two pieces together, subjecting them to a welding heat, and pressing them together by a very few hammer blows. But when a thin film of oxide of iron was placed between similar smooth surfaces, a weld could not be effected.

2. Heterogeneous steel-scrap, having a much larger variation in composition than these irons have, when placed in a box composed of wrought iron side and end pieces laid together, is (on a commercial scale) heated to the high temperature which the wrought iron will stand, and then rolled into bars which are more homogeneous than ordinary wrought iron. The wrought iron box so settles together as the heat increases that it nearly excludes the oxidizing atmosphere of the furnace, and no film of oxide of iron is interposed between the surfaces. At the same time the inclosed and more fusible steel is partially melted, so that the impurities are partly forced out and partly diffused throughout the mass by the rolling.

The other theory is that the molecular motions of the iron are changed by the presence of certain impurities, such as copper and carbon, in such a manner that welding cannot occur or is greatly impaired. In favor of this theory it may be claimed that, say 2 per cent. of copper will almost prevent a weld, while, if the interposition theory were true, this copper could only weaken the weld 2 per cent., as it could only cover 2 per cent. of the surfaces of the molecules to be united. It is also stated that 1 per cent. of carbon greatly im-

pairs welding power, while the mere interposition of carbon should only reduce it 1 per cent.

On the other hand, it may be claimed that in the perfect welding due to the fusion of cast iron, the interposition of 10 or even 20 per cent. of impurities, such as carbon, silicon, and copper, does not affect the strength of the mass as much as one or two per cent. of carbon or copper affects the strength of a weld made at a plastic instead of a fluid heat. It is also true that high tool steel, containing 1½ per cent. of carbon, is much stronger throughout its mass, all of which has been welded by fusion, than it would be if it had less carbon. Hence copper and carbon cannot impair the welding power of iron in any greater degree than by their interposition, provided the welding has the benefit of that *perfect mobility* which is due to fusion. The similar effect of partial fusion of steel in a wrought iron box has already been mentioned. The inference is, that imperfect welding is not the result of a change in molecular motions, due to impurities, but of imperfect mobility of the mass—of not giving the molecules a chance to get together.

Should it be suggested that the temperature of fusion, as compared with that of plasticity, may so change chemical affinities as to account for the different degrees of welding power, it may be answered that the temperature of fusion in one kind of iron is lower than that of plasticity in another, and that as the welding and melting points of iron are largely due to the carbon they contain, such an impurity as copper, for instance, ought, on this theory, to impair welding in some cases and not to affect it in others. This will be farther referred to.

The next inference would be that by increasing temperature we chiefly improve the quality of welding. If temperature is increased to fusion, welding is practically perfect; if to plasticity and mobility of surfaces, welding should be nearly perfect.

Then how does it sometimes occur that the more irons are heated the worse they weld?

1. Not by reason of mere temperature; for a heat almost to dissociation will fuse wrought iron into a homogeneous mass.

2. Probably by reason of oxidation, which, in a smith's fire especially, necessarily increases as the temperature increases. Even in a gas furnace, a very hot flame is usually an oxidizing flame. The oxide of iron forms a dividing film between the surfaces to be joined; while the slight interposition of the same oxide, when diffused throughout the mass by fusion or partial fusion, hardly

affects welding. It is true that the contained slag, or the artificial flux, becomes more fluid as the temperature rises, and thus tends to wash away the oxide from the surfaces; but inasmuch as any iron, with any welding flux, can be oxidized till it scintillates,' the value of a high heat in liquefying the slag is more than balanced by its damage in burning the iron.

3. But it still remains to be explained why some irons weld at a higher temperature than others; notably, why irons high in carbon or in some other impurities can only be welded soundly by ordinary processes at low heats. It can only be said that these impurities, as far as we are aware, increase the fusibility of iron, and that in an oxidizing flame oxidation becomes more excessive as the point of fusion approaches. Welding demands a certain condition of plasticity of surface; if this condition is not reached, welding fails for want of contact due to mobility; if it is exceeded, welding fails for want of contact due to excessive oxidation. The temperature of this certain condition of plasticity varies with all the different compositions of irons. Hence, while it may be true that heterogeneous irons, which have different welding-points, cannot be soundly welded to one another in an oxidizing flame, it is not yet proved, nor is it probable that homogeneous irons cannot be welded together, whatever their composition, even in an oxidizing flame. A collateral proof of this is, that one smith can weld irons and steels which another smith cannot weld at all, by means of a skilful selection of fluxes and a nice variation of temperatures.

To recapitulate: It is certain that perfect welds are made by means of perfect contact due to fusion, and that nearly perfect welds are made by means of such contact as may be got by partial fusion in a non-oxidizing atmosphere or by the mechanical fitting of surfaces, *whatever* the composition of the iron may be within all known limits. While high temperature is thus the first cause of that mobility which promotes welding, it is also the cause, in an oxidizing atmosphere, of that "burning" which injures both the weld and the iron. Hence, welding in an oxidizing atmosphere must be done at a heat which gives a compromise between imperfect contact due to want of mobility on the one hand, and imperfect contact due to oxidation on the other hand. This heat varies with each different composition of irons. It varies because these compositions change the fusing-points of irons, and hence their points of excessive oxidation. Hence, while ingredients, such as carbon, phosphorus, copper, etc., positively do not prevent welding under fusion, or in a non-

oxidizing atmosphere, it is probable that they impair it in an oxidizing atmosphere, not directly, but only by changing the susceptibility of the iron to oxidation.

The obvious conclusions are: 1st. That any wrought iron, of whatever ordinary composition, may be welded to itself in an oxidizing atmosphere at a certain temperature, which may differ very largely from that one which is vaguely known as "a welding heat." 2d. That in a non-oxidizing atmosphere, heterogeneous irons, however impure, may be soundly welded at indefinitely high temperatures.

These speculations may throw little light on the subject of welding. They are introduced for the purpose of indicating the direction of farther inquiry and experiment, and of impressing the necessity of caution in arriving at conclusions about these irons from the limited data afforded by these experiments.

In reviewing the experiments with reference to welding, and under the precaution mentioned, let us observe:

1st. All the irons were so very low in sulphur that this ingredient could not have materially affected welding power.

2d. As we shall see in detail, farther on, the irregular differences in the working and reduction of the bars which affected all other physical properties affected this one also.

Let us first take the singularly impure iron **M**. Its surfaces were pretty well united by welding, but the iron about the weld was weakened, especially at a high heat. Of 59 ruptures of links made of this iron, 33 were through the weld, and the iron was little distorted. Of 303 ruptures of links made of other irons, but 36 were through the weld.

The 1¼ in. bar of iron **M** presents an exception; it stands high on the list in welding capacity, and contains copper 0.31 (average Cu. in iron **M** 0.34). Its phosphorus, slag, and silicon are about average. But the bar is also remarkable in containing nickel 0.35 and cobalt 0.11. Did these ingredients neutralize the copper under this special treatment? No other irons contain any notable amount of them, except iron **A**, which has Co. 0.07 and Ni. 0.08; but it also has Cu. 0.17.* The welds of this iron were very strong, the links breaking oftener at the butt than at the weld.

Two links made from iron **M** were analyzed from specimens taken

* This iron may have received the copper while being rolled in a train ordinarily used for copper.

at the weld end and at the butt end. The weld end had been reheated and hammered twice; the butt end had not been hammered, and had received heat only by conduction from the other end. The analyses show that silicon and slag only were materially affected by twice heating and hammering, as follows:

	SI.	SLAG.
Iron M, 1½ in. bar, weld end, ...	0.182	0.994
" 1½ in. bar, butt end, ...	0.208	1.078
" 1⅝ in. bar, weld end, ...	0.177	1.382
" 1⅝ in. bar, butt end, ...	0.261	1.738

In oxidizing to silica, the Si. diffused a small amount of flux, which should have helped welding by preventing oxidation or by carrying off oxide of iron, or both; but the amount was so very small in this case that its effect cannot be traced. Nor does iron **J**, in which Si. was highest (0.18 to 0.32), confirm this theory. Although the other impurities were not high, and the iron was not overworked, it welded rather badly. The value of short chains is as follows: Best, Si., 0.14, 0.16, 0.07, 0.16, 0.14, 0.17, 0.15, 0.16, 0.10, 0.16, 0.20, 0.17, 0.27.

Phosphorus, up to the limit of ¼ per cent., had not a notable effect on welding. It was lowest in iron **O**, which welded soundly; but all impurities were low, and welding power was traced to the reduction of the bar by direct experiment. The same is true of iron **P**. Omitting one course of piling and hammering largely helped its welding power (iron **Px**). Iron **P** welded badly, not on account of its P. 0.17; for iron **B**, with P. 0.23, and iron **D**, with P. 0.18, welded soundly. Iron **M** had the highest P., 0.25 (0.21 to 0.32). While its surfaces stuck together pretty well, the links broke through the weld when they were made at a high heat, which may be accounted for by the fact that phosphorus increases fluidity, and hence capacity for oxidation. The value of short chains is in the following order: Best, P., 0.23, 0.18, 0.07, 0.20, 0.18, 0.19, 0.17, 0.19, 0.17, 0.25, 0.15.

Carbon notably affected welding. It ran as follows in connection with regularly decreasing welding power: C., 0.02, 0.015, 0.04, 0.03, 0.03, 0.03, 0.04, 0.04, 0.05, 0.032, 0.04, 0.07, 0.35.

The weld steel, or steely iron, **L** (C. 0.35), when treated by the uniform method usually adopted for chain-cable irons, made the worst welds. Iron **K**, with carbon so low as 0.07, made bad welds, although it was otherwise a good average chain iron, with a medium

amount of impurity. Carbon, in a greater degree than phosphorus, promotes fluidity; hence, the iron is "burned" at the ordinary welding temperatures of low-carbon irons.

Slag was highest (2.26 per cent.) in the 2 in. bar of iron **N**, which welded less soundly than any other bar of the same iron, and below average as compared with the other irons. Slag should theoretically improve welding, like any flux, but its effects in these experiments could not be definitely traced.

THE EFFECTS OF REDUCTION FROM PILE TO BAR.

1st. *On Strength.*—Early in the course of the mechanical tests, it became evident that, although each set of nine bars (1 in. to 2 in. diameter) from any maker, was made of the same material and as uniformly as ordinary processes would allow, yet there was a notable variation in the physical characteristics of the different-sized bars. The tenacity, elastic limit, and ductility increased as the diameter decreased. In fourteen sets of bars the strength per square inch of the 1 in. over the 2 in. ran from 4000 to 7000 lbs.; and in bars known to have had uniform treatment, it averaged 5600 lbs. But the increase of strength was not uniform. In eight sets of bars the strength fell off at the $1\frac{1}{2}$ in. size.

An investigation of the method of manufacture revealed the causes of these phenomena. The piles from which the 2 in., $1\frac{7}{8}$ in., $1\frac{3}{4}$ in., and $1\frac{5}{8}$ in. bars were rolled, had the same cross section, differing only in length. The piles for the $1\frac{1}{2}$ in., $1\frac{3}{8}$ in., $1\frac{1}{4}$ in., $1\frac{1}{8}$ in., and sometimes the 1 in., were of the same area, although smaller than the piles above mentioned. The areas of the piles remaining constant with each set, while those of the bars decreased, the smaller bars received the most work in the rolls. It was then found by numerous experiments that the tenacity and elastic limit of the various bars of a set increased just in proportion to the decrease of the percentage of the area of the bar to that of the pile.

In order to determine if the converse is true, another set of experiments was undertaken, and it proved that by preserving a uniform proportion of bar to pile, all the bars of the series have substantially the same strength per square inch.

Table V gives two typical examples, selected from the records of the Board. That of iron **N** shows the effect of variation in the percentages of pile to bar; that of iron **Fx**, the effect of uniformity. (See also comparative effects of composition and reduction on page 22.)

Table V.

Iron N, showing decrease of strength by decrease of reduction.				Iron Fx, showing uniformity of strength with uniformity of reduction.		
Size of bar.	Area of bar in per cent. of area of pile.	Tensile strength.	Elastic limit.	Area of bar in per cent. of area of pile.	Tensile strength.	Elastic limit.
In.	(Pile 6x4¾)	Lbs. per in.	Lbs. per in.	Per cent.	Lbs. per in.	Lbs. per in.
2	11.36	51,848	32,461	3.92	50,763	33,258
1⅞	10.22	54,034	33,610	3.45	53,361	35,032
1¾	8.90	55,018	34,283	3.34	53,154	35,323
1⅝	7.68	56,344	35,889	3.24	53,329	33,520
	(Pile 4x3¾)					
1½	11.78	53,550	34,690	3.27	52,819	34,840
1⅜	9.90	54,277	33,622	3.53	52,733	34,606
1¼	8.18	56,478	33,251	3.41	53,248	33,520
1⅛	6.62	56,543	32,267	3.31	54,645	34,695
1				3.14	53,915	36,287

The falling off in the strength of the 1½ in. bar of iron **N** is also obviously due to the increased percentage of bar to pile.

The 10 x 10 in. pile designed for the 2 in. bar of iron **Fx** could not be rolled, so that the bar had less reduction and strength than the others, which all ran very near the average, viz.: 53,400 lbs. tenacity, and 34,565 lbs. elastic limit.

It thus appears practicable to manufacture a 2 in. bar in such a way that it will sustain 15,000 lbs. more than will a 2 in. bar of the same iron manufactured in the ordinary way; and it is probable that a 4 in. bar could be strengthened 60,000 lbs. in a similar manner. These facts throw much definite light on the frequent breakage of large rolled and hammered bars and forgings.

But as the use of a special-sized pile for each size of bar would be inconvenient and costly, and would require large additions to rolling-mill machinery, the practice is not likely to become common. The variation of strength due to that of reduction should, therefore, be taken into consideration in all estimates of the strength of structures, and in all tables of strength and formulæ for the use of wrought iron. The report of the Board embraces two tables of the strength of bars calculated with this allowance, and also a proof table for chain cables, which is quite a different table, and a very much safer one, than the standard proof table of the British Admiralty, which is now in general use here and elsewhere.

The Admiralty table assumes that the bars of unequal diameters

possess equal proportionate strength, and that iron fit for cables has the excessively high strength of 60,000 lbs. per inch. The following are typical results selected from many reported by the Board. Three cables, five fathoms long, made from 1¼ in. iron, of good quality, were subjected to the Admiralty proof of 91,800 lbs. Three similar cables from 1⅛ in. iron received the 166,500 lbs. proof. The usual shop inspection did not reveal any injury; but a magnifying-glass showed cracks in the crowns of fourteen links. Eleven 15-fathom cables of excellent iron stretched (average) 27 in. under 56 tons pull; 35 in. under 60 tons. In one cable which 56 tons had stretched 25 in., 68 tons (only 12 tons more) stretched 56 in., or more than double. The Admiralty test for this size is 72 tons.

The table of the United States Board prescribes what their experiments have abundantly proved, that the tenacity of the 2 in. bar should be between 48,000 lbs. and 52,000 lbs. per sq. in., and that the 1 in. bar should have between 53,000 and 57,000 lbs. tenacity. Much stronger iron than this makes worse cables, because it does not weld soundly, and is not adapted to resist sudden strains.

2d. *Effect of Reduction on Welding.*—It is reasonable to suppose that in a material consisting of a bundle of fibres, the mobility—the flowing capacity—necessary to welding should be greater if the fibres are loosely compacted, than if the two surfaces are already dense and hard; although perfectly fitted and cleaned surfaces might weld perfectly, however dense. And although we cannot trace the effects of slag in these experiments, it is obvious that enough of it to protect the surfaces from oxidation and to wash off any oxide formed must be advantageous. The least worked iron should contain the most slag. And the advantage of underworked iron would probably be that the slag would lie along the fibres in small threads, while in hard, and especially in granular iron, it might lie in pockets or in masses large enough to seriously affect strength.

The experiments prove that the strength of the link, which is chiefly dependent on welding power, as compared with the strength of the bar, was more decreased by overworking than by any other cause, excepting the high carbon in the steely iron **L**, and the excess of copper, phosphorus, etc., in the peculiar iron **M**. The average proportion of link to bar in iron **Px** was 164, while in the same iron **P**, which had received simply another piling and hammering, the proportion was but 154.5.

The proportion of link to bar in iron **F** was 163.2, while in the same iron **Fx**, which had been much more worked, it was only 154.4.

The proportion of link to bar in the 1⅞ bar of iron **O** was 184,

while the proportion in the 1 in. bar of iron **O** was but 148, or 80 per cent. of the large bar. As iron **O** was very uniform in composition, and extremely pure (C., 0.04; P., 0.07; Si., 0.07), it is pretty certain that this difference in welding power was due to reduction.

The proportion of link to bar in iron **B**, the highest on the list, was 168.2, while the proportion in iron **K**, which was next to the steely iron **L**, was 141.6, or 84 per cent. of the highest proportion. The difference in the welding powers of irons **B** and **K** was the resultant of all causes.

3d. *Effect of Temperature during Reduction.*—The strengthening effect of cold rolling is well known. One experiment of this series strikingly illustrated the difference of strength arising from mere underheating as compared with slight overheating. A $1\frac{3}{8}$ in. bar of iron **F** which had 4.12 per cent. of the area of the pile, had 52,537 lbs. tenacity, and 34,469 lbs. elastic limit, while a $1\frac{7}{8}$ in. bar of the same iron, which had 4.60 per cent. of the area of the pile (not a very different reduction from the other bar), had but 49,061 lbs. tenacity, and 23,200 lbs. elastic limit. These differences were due to the $1\frac{3}{8}$ in. bar being underheated and consequently rolled a little "cold," while the $1\frac{7}{8}$ in. bar was a little overheated, but not "burnt." Such differences were constantly occurring during the experiments at the mills.

WHAT IS LEARNED FROM CHEMICAL ANALYSES.

So far, it may appear that little of use to the makers or the users of wrought iron has been learned. But it should be remembered, as was remarked at the beginning of the paper, that all these irons were intended to be as nearly as possible alike, and to be adapted to the peculiar use of chain-cable. The makers generally understood the necessary conditions, and every effort was made to reach this special standard of excellence. Had it been reached, the irons would have all been exactly alike in physical character, and presumably similar, although not necessarily alike in chemical character, for certain ingredients may replace others within limits which are perhaps narrow. Certainly, the attempt to make all the irons conform to a well-known standard of quality was the worst possible way to ascertain the distinctive effects of the various altering ingredients. In order to make this latter determination, one series of irons should have been made as uniform as possible in all ingredients except one, for instance, phosphorus, and that one should have been varied as much as possible. Another series should have been alike except in silicon, and so on, through the list of altering ingredients. The series of

tests which the Board has undertaken on steels was devised upon this principle. It was, however, thought best, after the physical tests of these irons were completed, to subject them to analysis, in the hope that some good result would follow. This hope has been realized in an unexpected and somewhat surprising manner.

1st. The want of uniformity in the chemical composition of the *same brand of iron* is a conspicuous defect which is readily accounted for. In iron **M**, silicon varied from 0.16 to 0.26; in iron **J**, it varied from 0.18 to 0.32. In iron **P** (which had the best average qualities), phosphorus varied from 0.09 to 0.25; in iron **D** it varied from 0.12 to 0.24, and in iron **J** from 0.14 to 0.29.

Starting with a uniform pig iron, the puddling process may or may not remove a large amount of silicon, phosphorus and carbon, according to the temperature and agitation of the bath, the "fix" used in the furnace, and from many causes under the puddler's control, and dependent on his knowledge and skill.

Such variations would be entirely inadmissible in the most common grades of steel; in fact, they could not occur in the cheap steel processes, when using a uniform pig iron, except by a special effort. In the Bessemer process, the completion of the oxidation of silicon and carbon is obvious to the inexpert observer; in the open-hearth process, unmistakable tests are taken during the operation. The character of steel can be surely predicated on the analysis of its materials; that of wrought iron is altered by subtle and unobserved causes. Should it be urged in favor of wrought iron, that P. can be largely removed during its manufacture, while in the steel manufacture it cannot be, it may be answered that there is an abundance of pig irons which do not contain much P.; and it is better to be sure of a definite amount of a deleterious ingredient than to run the risk of a variable amount.

We are not prepared to show the exact effect of varying reduction on steel. Ingots of the same grade of steel, from 6 in. square to 14 in. square, are employed for the same sized bars; the larger ones are preferred, notwithstanding the greater cost of working them, not because small ingots will not make good bars, but because they make too much scrap. Steel depends comparatively slightly on condensation for its density, but very greatly on its being cast from a fluid state. It is a crystalline mass in both large and small ingots, and not a bundle of fibres of iron more or less compacted.

2d. This matter of varying strength due to varying reduction—the most important developed by the series of experiments—is made all the more certain and useful by the analyses; for without a

knowledge of the composition of the bars and of the specific effects of different ingredients, a part of the variation now traced to reduction might have been attributed to composition.

It may be stated in general terms that notwithstanding this attempt at uniformity, the differences in reduction in the rolling mill, from pile to bar, caused as much variation in the physical qualities of these irons as did the differences in the chemical composition of the whole series of irons, excepting the steely iron **L**. The highest difference in tenacity, due apparently to varying reductions, is 9969 lbs. per square inch. The highest difference between the average tensional resistances of all the irons (excepting the steely iron **L**), due to all causes, is but 7109 lbs. The following illustrations are more in detail (see, also, foregoing Table V):

IRON P.

	Per sq. in.
Tenacity of 1 in. bar (1.74 per cent. of pile) above 2 in. (6.98 per cent. of pile),	7,935 lbs.
Elastic limit " " " " " "	7,352 lbs.

IRON F.—2d Lot.

Tenacity of 1⅛ in. bar (2.76 per cent. of pile) over 2 in. (5.23 per cent. of pile),	4,698 lbs.
Elastic limit " " " " " "	3,227 lbs.

IRON F.—3d Lot.

Tenacity of ¼ in. bar (1.60 per cent. of pile) over 2½ in. (6.13 per cent. of pile),	9,656 lbs.
" ⅜ " (3.68 per cent. of pile) over 4 in. (15.70 per cent. of pile),	7,786 lbs.
Elastic limit of ⅜ in. bar " " " " "	15,045 lbs.
Tenacity of 1 in. bar (3.14 per cent. of pile), " " "	5,599 lbs.

IRON N.

Tenacity of 1⅛ in. bar (6.62 per cent. of pile) above 2 in. (11.36 per cent. of pile),	4,695 lbs.

IRON A.

Tenacity of 1 in. bar (3.14 per cent. of pile) over 2 in. (8.72 per cent. of pile),	3,575 lbs.

IRON D.

Difference in phosphorus in 1 in. and 2 in. bars, 0.05; other ingredients about alike.	
Tenacity of 1 in. bar over 2 in. bar,	9,969 lbs.

The following are apparently results of composition:

COMPARATIVE TENACITY.

Of iron highest in average qualities over the one lowest in impurities,	3,229 lbs.
Of most tenacious steely iron (carbon 0.28) over least tenacious (carbon 0.03),	15,464 lbs.
Of an iron with phosphorus 0.25, over same iron with phosphorus 0.09,	4,963 lbs.

3d. The variation of welding power by reduction, in a greater degree than by composition, has already been shown in detail. Chemical analyses were necessary to establish this fact.

4th. To the steel maker and user it will appear somewhat remarkable that phosphorus may run up to nearly a quarter of one per cent., with carbon 0.03 and silicon 0.15, in the best chain cable

irons, when it is considered that low tenacity and high ductility are the essential features of such irons, and that the effect of this ingredient is to produce exactly opposite results.

5th. The comparison of chemical and physical results suggests a number of experiments which would go far to settle vexed questions and improve the practice, especially with regard to welding.

(1.) Regarding slag, it has been shown that a larger amount is sometimes found in a well-worked than in a less reduced iron, and that its effects are uncertain. Experiments should be arranged to show what composition of slags will readily come out of the pile in rolling; whether 2-high or 3-high trains will best remove them, and how much and what kind of slag affects strength and welding. A stable oxide of iron, which would probably do the most harm, could be formed by blowing superheated steam upon red-hot bars before piling. It might be proved that very fusible slags, or fluxes, should be placed in the pile to protect surfaces from oxidation and to wash away less fusible impurities.

(2.) It has already been suggested that special irons, having respectively a certain ingredient in excess and the others low and uniform, should be made, in order to ascertain, in a conspicuous manner, the physical effects of the various ingredients.

(3.) Referring to a previous recapitulation of remarks on welding: The effects of very different temperatures on irons varying in composition, as compared with that uniformly high temperature usually known as a "welding heat," should be much more carefully ascertained. And the effects, and more especially the means of welding in a non-oxidizing flame, where mobility of surfaces can be got without "burning," should be made the subject of elaborate experiments. The excellent welding of a heterogeneous mass of steel and iron, protected from oxidation by being placed in an iron box which will stand a high heat, has been referred to. The system of gas-welding by which Mr. Bertram welded boilers, at Woolwich, twenty years ago, has since been in regular use by the Butterly Company, in England, for joining the members of wrought iron beams of large section. It should seem within the power of modern engineering and chemistry to provide means for the perfection in a non-oxidizing atmosphere, of welds, like those of ships' cables and bridge links, upon which hang so many lives and so much treasure.

CONCLUSIONS.

I. Although most of the irons under consideration are much alike in composition, the hardening effects of phosphorus and silicon can

be traced, and that of carbon is very obvious. Phosphorus up to 0.20 per cent. does not harm and probably improves irons containing silicon not above 0.15, and carbon not above 0.03. None of the ingredients, except carbon, in the proportions present, seem to very notably affect welding by ordinary methods.

II. The strength of wrought iron and its welding power by ordinary methods are varied as much by the amount of its reduction in rolling as by its ordinary differences in composition. Uniform strength may be promoted by uniform reduction, but only at such increased cost of manufacture that the practice is not likely to obtain. Therefore, the reduced strength of large bars made by ordinary methods should be considered in designing machinery and structures.

III. In accordance with these facts, the United States Test Board has shown, by trial, the unsafety of the Admiralty proof tables for chain-cable, and has prepared new ones, and also new tables of the strength of different sized bars. The Board has demonstrated that the tenacity of 2 in. bar for chain cable should be between 48,000 and 52,000 lbs. per square inch, and of 1 in. bar between 53,000 and 57,000 lbs., and that stronger irons than these make worse cables because they have low ductility and welding power.

IV. Chemical analyses, made in connection with physical tests, are indispensable to conclusions about either the character or treatment of iron. In this series of experiments the demonstration that strength is dependent on reduction is made more definite and useful by the analyses.

V. Analyses also prove that the same brand of wrought iron may be heterogeneous in composition, and they emphasize the previously known fact that wrought iron making processes as compared with the cheap steel processes necessarily give an uncertain character to the former material, while to the latter the desired quality may be imparted with certainty and uniformity.

VI. The ordinary practice of welding is capable of radical improvement; the fact has been fully demonstrated; the means should be made the subject of complete experiments. The perfection of means for welding in a non-oxidizing atmosphere would seem to be the promising direction of improvement.

The elaborate mechanical tests made by Commander Beardslee have developed or confirmed other very important principles regarding the use of wrought iron, which this paper, already too long, cannot properly consider. They will appear in detail in the reports of the United States Test Board.

THE MANHATTAN SALT MINE, AT GODERICH, CANADA.

BY OSWALD J. HEINRICH, MINING ENGINEER.

(Read at the Amenia Meeting, October, 1877.)

THE deposit of rock salt along the shores of Lake Huron, in Canada, has been brought before the public during the last six months, in consequence of the developments made by the diamond drill at Goderich. It is likely to be of more than common interest in the future, since now actual operations have been commenced to exploit the deposit and work it by regular mining. The methods of mining rock salt being but little known in this country, it may be of interest to make a few general remarks in regard to them before entering upon the description of this new mining enterprise.

According to the conditions under which salt is found in nature, various methods have been resorted to, in course of time, to make it available for the human race. They consist in:

A. Natural or solar evaporation.

B. Artificial evaporation, either exclusively or in connection with the former.

C. Mining the rock salt in its natural state, and converting it to a marketable product, if need be, by simply pulverizing it.

Without going into the details of the various methods of making salt available in an economical point of view, dependent on its degree of purity, or on various local influences, we cannot refrain from alluding to the general principles which influence the mining and manufacturing of salt in countries where they have been carried on for hundreds of years.

ECONOMICAL CONDITIONS FOR SUCCESS.

Salt being one of the articles of prime necessity, and one universally distributed throughout nature, it must always be sold at a comparatively low price. It would even be quoted in the market at prices far below those now ruling, if it were not for the high duties generally imposed upon it, for purposes of state revenues. But looking closer into the subject, it will be found that this duty is probably one of the least oppressive, although in some countries it exceeds sixfold the cost of profitable production. To produce the article at the lowest possible cost requires, therefore, a

close investigation as to the best methods. These will vary considerably according to circumstances and localities.

Near the seacoast, or on salt lakes, in congenial climates, where the surface is of little value, the enormous sources of salt stored away by nature in a weak solution are best made available by the solar process, except where labor is cheap, or the country is too remote from general commerce. Where, on the contrary, the surface is valuable, a cheap fuel can be obtained, and capital is not plentiful, the solar process with all its apparent advantages will probably result in a more costly manufacture. Against its general adaptability operates the comparatively small production, unless there is a large capital for arranging new plants. There is, in other words, too much dependent upon the weather, and the process is not capable of furnishing a large supply at short notice without increasing the general cost of production.

If deposits of salt are of an impure nature, or lie at such great depths that the investment of capital would involve too great an item in interest to be added to the cost of mining, the brine wells will be found to be the cheapest, if a cheap, or at least a moderately low-priced fuel can be obtained. Increase of production, in this instance, does not involve inordinate expense, if proper precautions have been taken, in laying out the first plant, to have ample pumping capacity, since only the evaporating capacity has then to be increased. If new wells, however, have to be sunk and fitted up to supply a temporary demand, the cost would be materially increased. Where the surface is very valuable or thickly populated, sinking of the surface may be another item of expense in the production in the way of claims for damages. It is less within the power of engineering to control disturbances at the surface, caused by leaching out deposits at no great depth below the surface, than is the case with regular and skilful underground work.

When the rock salt is not pure enough to be used for all ordinary purposes, by being simply ground fine, it will be found more advantageous to dissolve the same underground to a concentrated brine, and lift this solution, instead of raising the rock salt, as it is practiced in the "Sinkworks" (*Sinkwerke*).

The requirements of the market have also a decided influence upon deciding the question how to make salt deposits available. A very large quantity of salt is consumed in manufacturing, for agricultural purposes, and as an antiseptic. A rock salt is often pure enough for such purposes, and therefore preferable to the manufac-

tured salt, in consequence of its lesser solubility and lower cost of production.

If, therefore, large deposits of marketable rock salt exist within reasonable distance of the surface, direct mining is to be recommended. It is true that the expenditure of capital in developing and fitting out the mines, particularly at great depths, is considerable, and this may be still further increased if water-bearing strata are met with; but this expenditure is largely counterbalanced in the long run by the reduced cost of production. The cost of production can also be more accurately and promptly estimated for a long period of time, since it is less influenced by outside causes, as will be shown hereafter. Further, mechanical power being used to reduce the salt to marketable sizes, it may also be used in the mines to considerable extent for mining the salt.

The principal items, therefore, to be taken into consideration in deciding the question of obtaining salt in an economical point of view in a particular locality, are:

1. The magnitude, accessibility, and greater or less purity of the deposit.

2. The cost of fuel, the regularity of production, demand, and price.

3. The requirements of the market.

4. The facilities of transportation to distant markets,—an item in all instances of paramount importance.

5. The available capital and rate of interest upon the same.

A pure deposit, from which salt can be obtained at a low cost, suitable for most requirements, which is conveniently located for an extensive market, with low rates of transportation, must prove an attractive and valuable field for the investment of capital.

Comparing mining of rock salt with mining of other articles of prime necessity or usefulness, it can be shown that its conservative character gives it great advantages over the wild and speculative character of other classes of mining.

STATISTICAL STATEMENTS.

Statistics prove that a certain amount of salt is indispensable for the existence of mankind. It varies according to climates and the occupations of various nationalities. The consumption is *per capita:*

For the Norwegians, 35 pounds; English, 18 pounds; Italians,

Spaniards, and Portuguese, 13 to 20 pounds; Belgians, 17 pounds; Swiss, 16 pounds; French, 14½ pounds; Russians, 14 pounds; Germans, 12 to 14 pounds; Turks, 9 pounds; Americans, 32 pounds, and, including manufactures, even 50 pounds per head.

This percentage of consumption is nearly constant, and the amount of consumption increases therefore in direct ratio with the increase of population. There is no other substance known to us, nor is there any likelihood that any other exists, which will take its place. Whatever, then, may be the changes in regard to the consumption of other articles in course of time, salt may be taken as one of almost permanent stability; its fluctuations in production being confined to narrow limits, dependent on the greater or less activity of manufactures.

This may be best proved by the aid of statistical references, taken particularly during the late years of a prevailing commercial and financial crisis all over the world almost unrivalled in history. On examination of the following table (Table I) there is also seen the great difference in price existing among the various salt-producing countries, according to their maritime facilities and prices of fuel. In both instances Great Britain has the advantage. The high prices in Austria may be referred to the monopoly by which the government controls the manufacture of salt. It is also noticeable the large amount of solar salt produced in Russia, which is very favorably located in certain departments for this manufacture.

While the constancy of price has hardly been affected during a period of three years, including partially the flourishing years previous to the crisis and those immediately succeeding, the production has remained constant, and, in the case of Great Britain, has even increased.

In Germany, for example, the production of salt has been increased from 425,000 tons in 1863 to 1,005,000 tons in 1872, equal to 129 per cent. But, while the manufacture of brine salt has only been doubled, the raising of rock salt has been quadrupled, owing, partially, to its increased use in the chemical arts and in agriculture.

The amount of salt exported from a country favorably located may be seen in Table II.

Table I. Production of Salt.

	1872.		1873.		1874.	
	Tons produced.	Value in gold.	Tons produced.	Value in gold.	Tons produced.	Value in gold.
GREAT BRITAIN.	1,309,497.5	$3,165,628	1,785,000	$4,328,625	2,306,567	$5,593,180
Per ton	.....	$2.41	.....	$2.42	.....	$2.42
GERMANY.						
1. Rock salt	145,827.5	$260,237	151,952.5	336,883	161,870.5	$318,019
2. Evaporated salt	368,342	2,421,615	372,313.1	2,392,326	406,606.5	2,555 914
3. Potash salt	489,491.8	1,317.144	450.954.4	1,055,120	429,542.5	809,496
Total product	1,003,161.3	$3,998.996	975,220	$3.784,329	998,319.5	$3,883,429
Average of salt per ton.	.....	$5.21	.....	$5.20	.....	$5.05
Av. potash salt per ton.	.....	$2.69	.....	$2.31	.....	$1 88
AUSTRIA.						
1. Rock salt	.....	.....	80,457.6	.....	81.081.7	$3,302,325
2. Evaporated salt	.....	.....	183,600.3[1]	.....	168.440 5[2]	7,247,800
3. Industrial salt	.....	.....	13,945.3	.....	13,607.8	
Total product	.....	.....	278,003.2	....	263,130	.....
Average	.....	.....	.....	.....	.....	$40
RUSSIA.						
1. Rock salt	.....	.....	50,563.2	.....	54,630.5	.....
2. Evaporated salt	.....	.....	774,967.6[3]	.....	714,369.8[4]	.....
Total product	661,871.6	.....	825,530.8	.....	769,000.3	.....
UNITED STATES OF AMERICA. (Taken from census returns.)	1850.		1860.		1870.	
Production of brine salt	174,354.3	$2.222.745	217.695.6	$2,265,302	314,394.7	$4,818.229
Imports retained	93,540	1,152,415	133,664.9	1.272,490	52,671.5	755,328
Consumption	267,894.3	3,375,160[5]	351,360.5	3,537,792	367,066.2[6]	5,573,557

Table II. Exports of Salt.

	1871.		1872.		1873.	
GREAT BRITAIN TO	Tons.	£. St.	Tons.	£. St.	Tons.	£. St.
Russia	54,181	29,512	66,478	44,420	84,528	75,116
United States of America.	183.761	96,834	154.010	123,347	242,444	249,077
British North America	96 396	43,335	70,885	39,600	60,539	51,558
British India	270,012	138,432	238,863	172,351	222 995	218,613
Various other countries	288,851	159,483	223,345	163,458	230,720	194,821
Total export	893,201	467,596	753,581	533,171	841,226	789,185
Per ton	.....	10.46 sh.	.....	14.14 sh.	.....	18.76 sh.

[1] Solar salt, 80,372 8.

[2] Solar salt, 19,583.4.

[3] Solar salt, 586,665.6.

[4] Solar salt, 493,539 4.

[5] Increase of price, $12.6 in 1850; $10.1 in 1860; $15.1 in 1870, owing to high tariff.

[6] Exclusive of salt manufactured by the Confederate States, which accounts for the deficiency. Confederate States estimated at 134,000 tons; total, 501,066 tons; average, $15.1 per ton.

The number of laborers employed in the salt manufacture in the various countries and those depending upon them is seen in the following statements.

There were employed in Germany, in 1874, for raising rock salt and potash salt, 1749 men for 591,431.5 tons; for making brine salt 4852 men for 490,164 tons.

Prussia, in 1875, for raising rock and potash salt, 874 men for 243,099.8 tons; for making brine salt, 2425 men for 331,249.4 tons.

Austria, in 1875, for raising rock salt, 1000 men for 74,740 tons; for making brine salt, 4792 men for 187,525.3 tons.

United States of America in the manufacture of salt (from census of 1870), 2953 men, 7 women, 56 children = 3016 for 44,015.5 tons. In Prussia the 3299 men had 7173 relatives to support. In Austria, beside 5792 men, 3013 women and children found employment.

The above cited statistics show also how much less manual labor is required in the mining of rock salt than in the production of the same amount of brine salt, an item of particular interest for the United States.

There are other important features in the mining of rock salt which give it great advantage over the manufacture of brine salt, and also over other kinds of mining in general.

When a shaft in a salt mine has been properly sunk and secured against the influx of water, there is rarely an instance, except by imprudent mining, that any considerable expense for raising water has been incurred. The absence of noxious gases, except in very rare instances, and the possibility of keeping open large chambers without any artificial support for almost any length of time, makes ventilation and transportation simple and inexpensive items when compared with other mines.

But one of the most important features to be noted is that by prudent and skilful management of the underground work, a considerable stock of marketable material may be kept on hand without any expense for storage or fear of deterioration in any reasonable length of time. Such a stock of material to be kept ahead is even a necessity in the large deposits, to enable the workmen, without any other means, to get at the upper lifts of the stopes and work them.

By judicious management the capacity of a salt mine, after a short space of time, may therefore be increased materially at almost a moment's notice, if only the hoisting capacity of the whole plant has been properly calculated. In case serious impurities of rock should be met

with, it is easily gobbed up in some of the old galleries, without fear of endangering the mine or causing future annoyance by rehandling.

THE ROCK SALT DEPOSIT AT GODERICH, ONTARIO, CANADA.

In the light of the above general remarks, we will now enter upon the description of the rock salt deposit of Goderich, and give a short description of the plant for the new mine just started.

The town of Goderich, near which, within the last twelve months, through the energy of H. Y. Attrill, proprietor of the property called "The Oaks," the first deep deposit of rock salt on this continent, has been successfully and thoroughly proved, is located upon the south side of the River Maitland, at its entrance into Lake Huron, on its eastern shore. It is located at the terminus of the Lake Shore Railroad, a branch of the Grand Trunk Railway, terminating at the harbor of Goderich, in which vessels from 500 to 1000 tons can enter and find secure shelter. Its navigation is undisturbed for at least six months in the year, and sometimes as much as seven and a half months.

The town of Goderich is a neat, healthy place, pleasantly located, and affords already good facilities for the comfort of a thrifty manufacturing population. This for itself is an object of great importance, permitting a ready supply of comforts to a laboring class,—schools, churches, and social enjoyments,—which in many other sections of the country would first have to be created at considerable expense.

From a glance at the map of America, it will be seen at once that this comparatively small and, outside of its immediate neighborhood, yet insignificant village, has the facilities of transportation of salt to all the great centres of trade in the West, and even those more remote, if only the salt can be raised cheaply enough.

A territory of over 1,000,000 square miles extending from Quebec and Montreal, in Canada, across to Buffalo, Cleveland, Indianapolis, Quincy, St. Joseph, Omaha, St. Paul, also along the northwestern shore of Lake Superior, with the great Western metropolis, Chicago, in its centre, inhabited by a thrifty agricultural and manufacturing population, may be reached by water, either exclusively or in connection with short lines of railroad, from this apparently unimportant village. Opposite to it, on the north bank of the River Maitland, is the situation of the property called "The Oaks," the site for the Manhattan salt mine.

The property itself, containing in all 760 acres of land, stretches along the beautiful shore of the lake for nearly one mile, and from

east to west down the Maitland River for about one mile and one-third. The larger portion of it is a splendid table-land, at an elevation of over 100 feet above the lake shore. The balance is formed of rich meadow-land along both sides of the river. The property has been highly improved, as well as ornamented in appearance, by the energy, taste, and considerable expenditure of the present proprietor. It combines, therefore, the double advantage of being a beautiful country residence and, as now developed, a rich mineral property.

GEOLOGICAL SECTION OF THE DEPOSIT.

As stated in the elaborate report upon the borings carried on and completed on this property by Professor T. Sterry Hunt, read by him before the Institute of Mining Engineers, at the February meeting, 1877,* rock-salt was known to exist in this neighborhood as early as 1861 or '63; therefore no special reference to this subject will be made here. But for the convenience of reference we will enumerate again in a more condensed form the section of rocks penetrated by the diamond drill, which for the first time established the fact beyond all doubt of the existence of a great salt deposit of varying thickness and purity along the lake shore in Canada.

NAME OF GROUP OF ROCKS.	DESCRIPTION OF STRATA.	THICKNESS OF STRATA.		TOTAL DEPTH FROM SURFACE.	
		Feet.	In.	Feet.	In.
I. RECENT FORMATION AND DILUVIAL STRATA. 56 feet.	Gravel 14 feet; blue or brownish clay 31 feet; boulders of various rock, limestone, granite, trap and porphyry 11 feet, imbedded in the same clay. This strata continues lower in the new shaft where also driftwood has been found in the clay, in a soft decomposed state	56	.....	56	.....
II. VERMICULAR GROUP. Principally dolomites. 301 feet, 5 inches.	*Dolomite.*—Gray, soft, but partially hard and porous	37	.....	93	.....
	Limestone.—Probably argillaceous, soft and jointed, particularly in lower part, probably a marl.	9	4	102	4
	Dolomite.—Alternating strata of lighter and darker yellowish-gray, hard, partially porous; at 115 feet some crystals of gypsum	28	3	130	7
	Dolomite.—Gray and brownish-gray, with darker streaks, mostly hard; 6 feet, light-gray, hard near top	25	5	156	.....
	Dolomite.—Similar colors, partially soft and shivery, saccharine, very jointy	25	½	181	½
	Limestone.—Dark-gray, porous, containing cavities filled with crystals of calc spar	2	.....	183	½
	Dolomite.—Mostly dark-gray and brownish-gray, finely laminated, with darker streaks, medium hard and saccharine	6	.....	189	½
	Dolomite.—Softer and porous, partially saccharine	12	.....	201	½
	Dolomite.—Brownish-gray, very soft and porous.	15	10½	216	11
	Dolomite.—Light-ash colored and yellowish-gray, hard, less porous	22	3½	239	3½
	Dolomite.—Light-gray and brownish-gray, shivery and porous in lower portion	28	9	268	.....
	Dolomite.—Mostly light-yellowish and brownish-gray, soft, porous, partially with thin-bladed crystals	26	.....	294	.....
	Dolomite.—Harder, containing more thin-bladed crystals and specks of pyrolusite	24	.....	318	.....

* Transactions, Vol. V, p. 538.

NAME OF GROUP OF ROCKS.	DESCRIPTION OF STRATA.	THICKNESS OF STRATA.		TOTAL DEPTH FROM SURFACE.	
		Feet.	In.	Feet.	In.
II. VERMICULAR GROUP. Principally dolomites. 301 feet, 5 inches.	*Dolomite.*—Dark, chocolate-colored, bituminous, hard, shivery, saccharine, partially porous, alternating with more solid benches	21	.....	339	.....
	Dolomite.—Partially more porous, partially saccharine, cavernous, some parts strongly bituminous, at lower 8 feet probably fossiliferous, contains pyrolusite	18	5	357	5
III. FOSSILIFEROUS GROUP. Limestone and dolomites, containing corals, mostly Favosites. 276 ft.	*Limestone.*—Dolomitic, dark-gray, fossiliferous	2	7	360	.....
	Dolomite.—Dark-gray, chocolat -colored with lighter strata, some bituminous, some silicious, fossiliferous at top	13	5	373	5
	Limestone.—Gray, mottled, cavernous, mostly hard, fossiliferous	11	.....	384	5
	Dolomite.—Dark, brownish-gray, hard, fossiliferous, containing calcareous inclosures	12	6	396	11
	Dolomite.—Gray and brownish-gray, saccharine, porous, easily broken, seamy, with stellated groups of bladed crystals, finer grained at bottom, fossiliferous	20	6	417	5
	Limestone.—Gray and brownish-gray, fine grained, containing decomposed calcareous inclosures, corals (Favosites) and chert	10	10	428	3
	Dolomite.—Brownish-gray, and darker gray, soft, cellular, with crystals of calcareous spar and corals	10	.....	438	3
	Limestone.—Gray and dark-gray, fine-grained, containing corals	28	1	466	4
	Limestone.—Light-gray, with darker laminæ, hard, containing corals and chert, also decomposed calcareous inclosures	34	6	500	10
	Dolomite.—Light-gray, fine grained, containing corals and decomposed calcareous inclosures	8	5	509	3
	Limestone.—Gray and variegated-brown, containing corals	19	8	528	11
	Dolomite.—Variegated-brown, laminated, finely granular, containing white chert	18	8	547	7
	Limestone.—Gray, laminated, with patches and layers of white chert, and carbonaceous inclosures	46	6	594	1
	Dolomite.—Light-gray, finely laminated, including white opaque chert, particularly at bottom of strata	39	4	633	5
IV. GYPSIFEROUS GROUP. Dolomites. 242 ft., 5 inches.	*Dolomite.*—Light and dark brownish-gray, also buff-colored, mostly hard, fine grained, some granular and thinly laminated	91	5	724	10
	Dolomite.—Mostly very dark-gray, hard, containing casts of thin-bladed crystals, vertical and oblique across the cores (probably originating from gypsum), interstratified with gypsum	37	1	761	11
	Dolomite.—Dark, brownish-gray, granular, easily broken, interstratified with gypsum	21	2	783	1
	Dolomite.—Light-gray, compact, partially hard, interstratified with gypsum	20	1	803	2
	Dolomite.—Gray and dark brownish-gray, compact, fine-grained, interstratified with gypsum.	31	.....	834	2
	Dolomite.—Dark-gray, compact, partially hard, also partially saliferous	41	8	875	10
V. SALIFEROUS MARL GROUP. Marl and rock salt. 251 feet.	*Marl.*—Tolerably hard, gray, brownish-red and green, mottled, partially saliferous	46	2	922	.....
	Dolomite.—Gray, granular	1	6	923	6
	Marl.—Dark, reddish-brown, interstratified with dolomite, porous or compact in texture	73	6	997	.....
1st. *Bench of rock salt.*	*Rock salt.*—Interstratified with dolomite and partially containing earthy impurities	30	11	1027	11
	Dolomite.—Gray, finely laminated, principally porous, with seams of salt	24	1	1052	.....
	Marl.—Like the former strata	8	.....	1060	.....
2d. *Bench of rock salt.*	*Rock salt.*—Partially colorless and transparent, but partially smoke-colored, contaminated by rocky matter, dolomite	25	4	1085	4
	Dolomite.—Interstratified with seams and layers of salt	6	10	1092	2
3d. *Bench of rock salt.*	*Rock salt.*—Mostly very pure, partially small amounts of impurities	34	10	1127	.....

NAME OF GROUP OF ROCKS.	DESCRIPTION OF STRATA.	THICKNESS OF STRATA.		TOTAL DEPTH FROM SURFACE.	
		Feet.	In.	Feet.	In.
VI. ANHYDRITE GROUP. Mostly marl, with anhydrite and some benches of dolomite. 390 ft. and more.	*Marl.*—Gray, inclosing much red salt in layers and vertical veins, also numerous thin beds of dolomite	43	.....	1170	.....
	Dolomite.—Granular, with layers of grayish-white translucent anhydrite	4	.....	1174	.....
	Dolomite.—Porous, interstratified with marls, traversed by veins of red fibrous rock salt	33	7	1207	7
4th. *Bench of rock salt*	*Rock salt.*—White, but partially impure, including layers of dolomite	15	5	1223	.....
	Dolomite.—Porous, one foot granular, bluish-gray, subtranslucent anhydrite, saliferous, two feet dolomite, four feet marl	7	.....	1230	.....
5th. *Bench of rock salt*	*Rock salt.*—Clear white, partially impure	13	6	1243	6
	Marl.—Red, bluish and greenish, banded and variegated, interstratified with reddish salt up to two feet in thickness, thin layers of bluish anhydrite and reddish exfoliating marls	135	6	1379	.....
6th. *Bench of rock salt*	*Rock salt.*—Pure white, translucent	6	.....	1385	.....
	Dolomite.—Porous, interstratified with thin layers of bluish anhydrite	6	.....	1391	.....
	Marl.—Variegated, exfoliating, soft	116	.....	1507	.....
	Dolomite.—Dark-gray, crumbling, containing cavities from dissolved salt	10	.....	1517	.....
	Bottom of bore-hole.				

EXTENT AND ECONOMICAL RELATIONS OF THE DEPOSIT.

On a careful examination of the different strata penetrated, it may be observed that the different groups of rocks have a practical bearing upon the mining. After passing the strata of recent origin we meet with a series of dolomites, to a great extent of a porous character, soft, and occasionally breaking easily into chips. From observations collected from this bore-hole and the brine wells in the neighborhood, this formation down to a depth of 357 feet holds a good deal of water, and must therefore be fully secured in any enterprise for salt mining. The next series of rocks, consisting principally of limestones, present, on the contrary, a very favorable ground, composed of solid benches of a very substantial rock, which, in its upper portion (the limestone or dolomite below the vermicular group), would afford a sound foundation for a column of tubbing. The fourth group of rocks, consisting also of dolomites interstratified occasionally with gypsum, offers very favorable ground for sinking, presenting in its lower part strong and tough roofing rock for the cover of the marl formations following. The marls, too, by their impervious character, furnish the best protection to the salt benches beneath against any influx of water from above, except when caused by imprudent mining. In this marl group the first three benches of rock salt are found. While it is true that in the test cores brought up by the diamond drill a considerable quantity of impurities are noticed, particularly

in the first bench, yet it would be more than rash from the limited space of a bore-hole 2½ inches in diameter, penetrating through a series of rocks, to judge fully of the character of thousands of square yards in its immediate neighborhood. Just as some impurities in the shape of interposed bands may be anticipated in the strata of pure white rock salt, so may we find considerable portions of the other benches in their aggregate thickness of 25 to 30 feet, which will offer profitable mining of the salt, even if the salt after being mined requires some picking, a work which has to be performed more or less in any salt mine now in operation.

From the geological survey of Canada it will be observed that a very extensive saline formation extends along the eastern shore of Lake Huron, in the province of Ontario. To judge from various borings this formation must have an area of several thousand square miles east of the shores of the lake, extending over 70 miles north and south, and over 30 miles east and west, its extent west under the lake, of course, not being known at all at present. This geological fact fully justified the expenditure to prove the thickness and purity of the deposit. This great question being now to a large extent solved by the test bore-hole put down at Goderich prior to establishing a mine for regular working, I feel some personal satisfaction in having recommended this course to the proprietor several years ago, in order to assure permanent success to so important an enterprise. But most of the praise should be given to the bold pioneer, who did not hesitate to furnish the means for the accomplishment of this great undertaking.

If we now turn our attention again to the vicinity of Goderich, or what is the same, that of the test bore-hole on the north bank of the Maitland River, at its entrance into Lake Huron, we find the Hawley well nearly 572 yards to the south, with the International still further in that direction; the Maitland and Goderich wells about 2200 yards to the east, the Victoria and Dominion wells about 2266 yards to the southeast. A territory of at least 260 acres to the dip (which is southerly), and also in the trend of the deposit, which is nearly east, has been fully tested. Assuming, as we may, the continuation of the deposit to extend to the rise, covering the compact body of land included in the Manhattan Salt Mine property, we have about 750 acres more, in all 1010 acres of ground, for which the existence of this exceedingly valuable salt deposit is established almost to a mathematical certainty. In this calculation the extension of the western trend under the lake has not been considered,

although this extension can hardly be doubted. This, at the same rate as above, would double the area of explored ground. Within this valuable territory the Manhattan Salt Mine has every acre of its property located, with the further advantage of extending the area of mining beyond the shore under the lake itself.

From all stratigraphical observations in this section of country no great disturbances can be noticed. The course and dip of the various rocks seem to indicate a period of considerable tranquillity in its history of sediments. Therefore, except by a thinning out of the deposit at some distant points, no fear need be anticipated of any ruptures—a matter of vast importance in regard to mining in the future.

Taking notice of the different benches of salt as discovered in the test bore-hole, we find in the upper marl group 97 ft. 11 in. of salt at a depth of 1127 ft., and in the lower anhydrite marl group 34 ft. 11 in. at a depth of 1385 ft., or a total 132 ft. 10 in. of rock salt, all of which may probably turn out to be sufficiently pure to be available for mining in course of time. Taking the lowest specific gravity of this rock salt at 2.125 as ascertained by Prof. Hunt, allowing furthermore 25 per cent. of the deposit to be lost in consequence of various mineral impurities, the actual amount of pure rock salt would then be 160,444 cubic yards per acre, equal to 286,864 tons of 2000 lbs. If we only consider the amount in the upper marl group, at the same rate of allowance it would be 118,556 cubic yards or 211,982 tons. According to the experience gained at the best mines of the kind in Europe, working at such depths, and allowing 35 per cent. left in the pillars for permanent security of the surface, at least while entering the mine, an acre of ground from the upper marl group only would yield 157,788 tons of merchantable salt to be raised from a depth of 376 yards.

Considering the economical advantages of this deposit, in the light of the facts already mentioned in treating of the manufacture of salt and mining of rock salt in general, the following conclusions may be drawn:

1. We have here, even within the limits of this property, an almost inexhaustible deposit of pure merchantable rock salt, according to Prof. Hunt, 99.75 per cent.; pure enough even for domestic uses.

2. The larger portion of it lies at a depth not exceeding that which, for the last twenty-five years, rock salt has been raised successfully, and at highly remunerative figures at Stassfurt (367 yds.), at Erfurt

(400 yds.), and Friederichshall (200 yds.), in Germany, and at St. Nicolas, Varanégville, in France (186 yds.).

3. The rock formations which must be passed through in sinking shafts, do not present any unusual difficulties or those not frequently met with in deep mining.

4. The various benches of rock salt, except No. 6, are of such thickness as will permit of the most economical extraction of the salt, in working each bench independently, leaving a floor sufficiently strong for each series of chambers, though directly over each other.

5. The facilities of water-transportation in large vessels secures moreover the best fuel at low rates in return cargoes from Ohio and Pennsylvania, for purposes of steam-power for the mines, or to evaporate the solutions of the impurer salt, if need be, to manufacture table salt.

6. No timber of any consequence for mining is needed, which otherwise would probably form an impediment to such an enterprise.

7. Any number of workmen may be easily and promptly accommodated with comfort and with the reasonable prospect of permanent work.

8. The works being placed almost within stone's throw of vessels, carrying heavy burdens of 1000 tons, are capable of commanding immediately an extended market, with the prospect of a still grander future, presenting altogether a combination of circumstances rarely found in a new kind of enterprise in this country.

According to the last census of the United States, its population is 10.7 inhabitants per square mile including the Territories, or 19.21 per square mile within the States. Making, therefore, an allowance of say 15 inhabitants per square mile in the territory of 1,000,000 square miles above mentioned, through which this salt may be shipped from Goderich, at the rate of 32 lbs. per capita, this population would require 214,285 tons of salt per annum, an assumption which will not be far wrong, if compared with the sales in the Western markets.

There is yet another important feature to be taken into consideration. To produce salt from even concentrated brine, about three times its weight of water has to be evaporated. This will require of ordinarily good coal about 0.4 to 0.5 ton to produce 1 ton of salt (or 8 barrels to 1 ton). If wood is used, it will require probably from one-half to one cord per ton. Now, in well-conducted works the proportion, at ordinary rates of fuel, to all other expenditures would be in the proportion of 5 to 6. If, therefore, the cost of fuel is x,

the amount of other expenditures will be $\frac{5x}{6}$, exclusive of superintendence and incidental expenditures. Suppose now coal could be brought here at $3 to $3.50 per ton; the cost of manufacturing one ton of salt would be $2.20 to $3.21, or for wood at $2.50 it would cost from $1.83 to $2.29 per ton (according to observations in Goderich, from $2.50 to $3). It is fully established, that in well-conducted mines of rock salt, working favorable deposits of pure salt, the cost of mining the same, and preparing it for market, is only one-third to one-fourth of the cost of making it from concentrated brine. Therefore, at the same ratio of labor in a given section of country as stated here, the salt might be mined for $0.75 to $1 per ton (exclusive of interest upon investment), ground ready for market, and of an almost chemical purity.

It is thus shown that while, at the present rates of fuel, in this section of country, brine salt cannot be made a profitable business, we may anticipate a bright future for the mining of rock salt.

But there are other manufactures which may follow such an enterprise, if the main raw material, rock salt, can be had cheap enough. Foremost amongst them are the chemical manufactures, particularly that of soda. While formerly it was necessary to establish such manufactures at points where sulphuric acid could be manufactured readily, or otherwise obtained at low rates, we are now, by the use of the ammonia process for soda, partially independent of such localities; this process requiring only a pure limestone, pure rock salt, and moderately cheap fuel. Soda can be manufactured by the above process with a smaller capital, and at least as cheaply as by the acid process. Even if salt could not be made profitably at Goderich from brine, soda by the ammonia process could even now be made a profitable business.

The considerable amount of salt used in tanning, in the chlorination of ores of the precious metals, and for other purposes in metallurgy, would create a demand for the rock salt mined here.

DESCRIPTION OF PLANT FOR THE NEW MINE.

The proprietor of this property, after thoroughly prospecting it, and after a careful examination by an expert, of all the principal salt mines of Great Britain, France, and Germany resolved to develop the deposit by mining, and ground was broken this summer on the 8th of August for a shaft to reach the deposit. This circular shaft, 10 ft. 6 in. diameter in the clear, is located close to the river bank and the lake shore, 230 feet and 140 feet distant respectively.

It will be carried down, according to circumstances, either to 1052 or 1152 feet, that is, to the first or third bench of rock salt.

The method of sinking, as soon as the bed rock has been reached, will be by the long-hole process with the aid of the diamond drill. After careful consideration of all circumstances, this plan was adopted as the one best uniting economy and speed in sinking, particularly in a series of strata where a considerable amount of water may be expected. From the experience obtained at the salt wells sunk in this immediate neighborhood, the main water-bearing strata appear to be confined principally to certain horizons, and beyond these horizons annoyance from water ceases. These water-bearing strata are confined within what has been termed the vermicular group or section, consisting, to a considerable extent, of very porous, cavernous rocks, partially of a very badly fissured or splintery dolomite. It is designed to close the bore-holes, when within certain strongly water-bearing horizons, by inverted valves, closing from below by the pressure of the column, and opened at times when the sinking approaches them, similar to the closing valves of such constructions as are used to close the last opening of a dam to cut off mine waters.

To conquer the water ultimately, when the water-bearing horizons have to be passed to sink lower, a direct acting vertical Blake's improved special steam pump of 24 in. steam cylinder, 12 in. diameter water cylinder, 24 in. stroke, calculated for a perpendicular column of 400 feet, and of a maximum capacity of 1200 gallons per minute, has been constructed for this shaft. In case this should not be sufficient, resource must be had to additional drawing lifts or a lift of a stationary bull-pump to split the column of water at certain depths. Unfortunately, the dimensions of the shaft, for reasons unnecessary to mention, are rather confined, so that some trouble may occur should this contingency arise. To secure the shaft ultimately against the influx of water, it is first to be lined from the surface to the bed rock by a brick lining, four bricks thick. From this point columns of cast-iron tubbing, from 60 to 100 ft. high, as the case may be, will be used as represented in Fig. 2. Each ring will consist of eight segments, 2 ft. high, the thickness of the same increasing from $\frac{5}{8}$ in. thick to $1\frac{3}{16}$ in. downwards to 260 feet according to the depth of column. They will have smooth-faced flanges with nosing at top and side, the column being wedged tight by wooden wedges in the original method of tubbing. After a thorough examination of a number of such shafts in England and on the continent of Europe, this system

has been found fully efficient for the purpose. In adopting this system of short columns, the influx of water can be more easily provided for than when greater quantities have to be lifted from lower levels. The shaft timbers are secured by sockets cast in the tubbing. The cross needles are studded against each other to secure the necessary rigidity for raising of materials at higher speed.

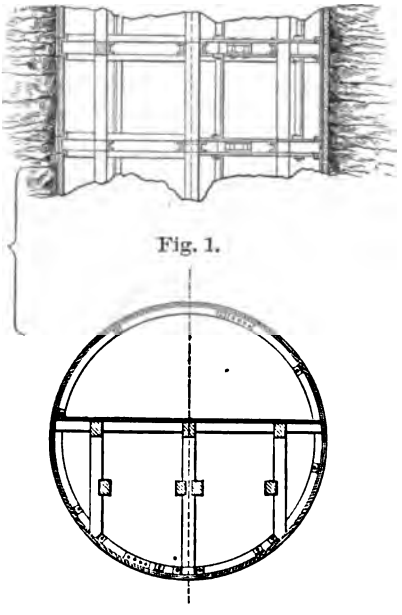

Fig. 1.

For the lower portion of the shaft below the tubbing, a system of supports has been adopted, which is probably not quite as much known and appreciated in this country as it might be. It consists of wrought iron frames made of channelled iron 8 in. high, bolted together by joint plates, and supported by flat iron studs bolted to the frames. In moderately wet ground the wooden lagging is replaced by sheet iron, and the space between it and the shaft walls filled with cement. To secure the lagging in a dry shaft, the staves can be either placed behind the iron sets, as usual, or the channelled iron is provided with a lip at top and bottom, forming a kind of U-shaped section. The sets are firmly wedged against the walls of the shaft before being lagged up, and, if need be, from time to time, may be temporarily or permanently supported upon bearers placed firmly in the walls of the shaft. This system of securing a shaft produces a neat and substantial job, and has considerable advantages where

skilled miners cannot be readily obtained. It requires but very few footings for bearings, and it can all be manufactured to order by the skilled mechanics at the shop, with the application of machine tools. For the security of the timbers dividing the shaft, or for the support of the guide rods, iron stops are bolted between the channelled iron at the proper places (Fig. 1), and for still further rigidity the same

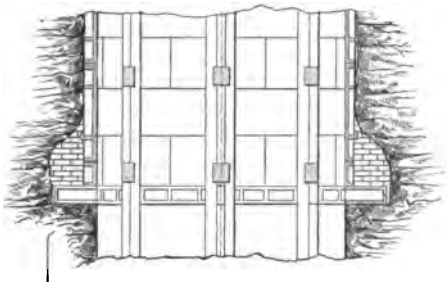

Fig. 2.

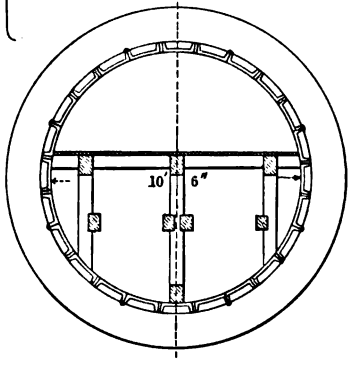

studs are used in all the corners as in the cast-iron tubbing. In Germany, where iron has already been used for such purposes in the mines for a number of years, the experience in regard to cost has been, that wherever replacement of timber is required twice during a given period of time, iron supports are found to be the cheapest, and cheaper even than masonry, for the iron can be used over again, and always has some value. In running or heaving ground it answers better than any other kind of support, and is therefore much used now in the coal mines of Germany. The shaft is divided into two hoist-chambers and one air-chamber, bratticed air-tight. The hoist-chambers are fitted with 5″ x 6″ wooden guide-rods to guide the cages, which will be provided with parachutes and safety-hooks.

The cages will receive a one-ton car, and are calculated to be raised, and the cars exchanged in one minute's time. The surface plant of this mine, when fully completed, will consist of (see accompanying map):

1. A shaft-house and derrick or pit-head, 38 ft. square, and 47 ft. high to axle of sheaves, is built of plain substantial timberwork in the pyramidal shape, strongly braced and weatherboarded throughout.

2. An engine-house, 42 ft. x 39 ft. in the clear, 19 ft. high, built of brick. It will contain a double cylinder direct-acting engine, 18 in. cylinder, 34 in. stroke, supplied with link motion and conical drum of 12 ft. and 7 ft. 6 in. diameter, with a band brake. A single engine of the same dimensions for working a Guibal fan, 12 ft. diameter, connected with the shaft by an underground archway. This will also supply the power for the mills to grind the salt for local trade, and drive an endless rope to transport the salt across the river to the harbor, as represented in the topographical sketch plan. The remainder of the engine-house is reserved for the air-compressors which will be used to run the diamond drills, and afterwards, probably, the salt-cutting machines underground.

3. A boiler-house, 34 ft. 6 in. x 36 ft. in the clear, 21 ft. high, containing four flue boilers 5 ft. diameter, 16 ft. long (68 flues 3 in. each), water reservoir, heater, and feed-pumps. This building and a chimney, 65 feet high from the grate, are built of brick in a substantial manner. Whenever the mine is ready to produce salt, the following buildings are designed to be added:

4. A reservoir-house, to dissolve impure salt contaminated by rock, for evaporation and supply of chemical works, which may be added to make soda by the ammonia process.

5. A mill-house for two pairs of breakers and four pairs of runners to grind the salt to the various grades required for market, and also to grind the impure, particularly gypsiferous, salt for agricultural purposes.

6. Two evaporating-houses, to make salt by the boiling process for table use, if it should be required.

7. A coal-house, to stock a supply of fuel for the winter season.

8. A double track bridge, about 500 feet long, to transport the salt from the mines to the harbor, and the coal to the mines by means of endless ropes.

9. The loading bunks, to keep sufficient stock on hand to load vessels at short notice. These will be placed in the northwest corner of the harbor.

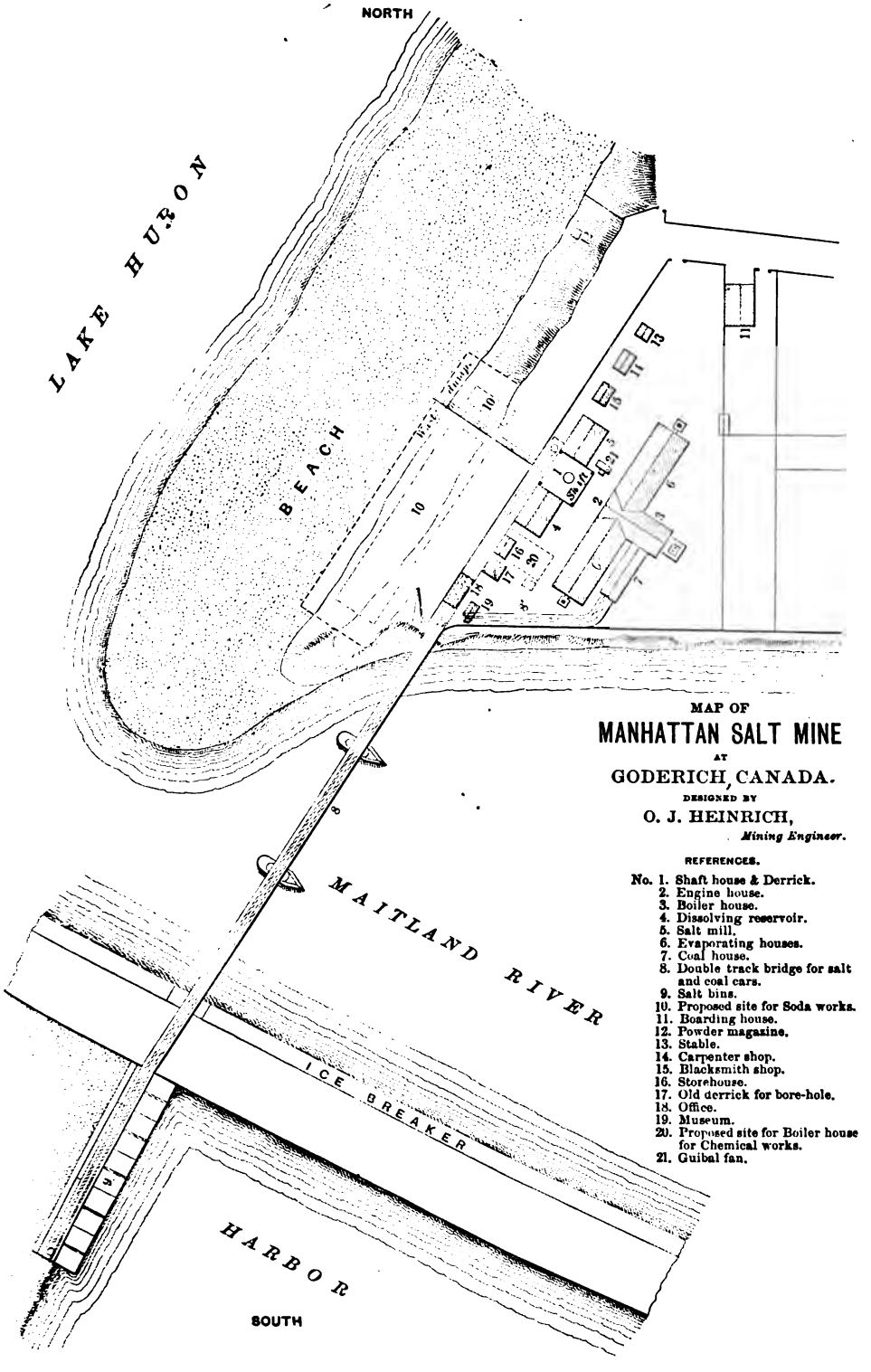

MAP OF

MANHATTAN SALT MINE

AT

GODERICH, CANADA.

DESIGNED BY

O. J. HEINRICH,

Mining Engineer.

REFERENCES.

No. 1. Shaft house & Derrick.
2. Engine house.
3. Boiler house.
4. Dissolving reservoir.
5. Salt mill.
6. Evaporating houses.
7. Coal house.
8. Double track bridge for salt and coal cars.
9. Salt bins.
10. Proposed site for Soda works.
11. Boarding house.
12. Powder magazine.
13. Stable.
14. Carpenter shop.
15. Blacksmith shop.
16. Storehouse.
17. Old derrick for bore-hole.
18. Office.
19. Museum.
20. Proposed site for Boiler house for Chemical works.
21. Guibal fan.

10. Chemical works, to make soda by the ammonia process. The location of these buildings, as also a boarding-house for thirty workmen, already built, will be noticed on the map.

The shipping season in this section of country being only about seven or seven and a half months in the year, the capacity of the shaft must be such as to raise 1200 tons of rock salt in twenty-four hours during the season. The mine cars of a capacity of one ton must therefore be raised and exchanged in one minute from a depth, if need be, of 1100 feet.

The track of the Grand Trunk Branch Railroad, it is anticipated, will be extended to the bunks alongside the harbor, so that railroad transportation may be secured the whole year round.

Conclusion.—In presenting the subject of this paper to the Institute, I cannot refrain from calling particular attention to its importance. The great increase in the production of salt which can be noticed abroad, and particularly that of rock salt in several of the German States, show the great advantage of mining it over its manufacture from brine, except where fuel and transportation are as favorable to the latter manufacture as in England. The smaller amount of manual labor needed in mining, as compared with manufacturing from brine, particularly for the United States, is also an item which recommends itself to notice, as does also the large amount of salt still imported into the United States. Various sections of country where salt is produced comparatively cheaply, cannot extend their area of supply for any considerable distance, owing to transportation charges.

It is a noteworthy fact that even now the rock salt of Stassfurt is being introduced in some of the Atlantic States of this continent, and is there competing with English salt for all purposes for which it can be used.

Attention should therefore be directed to an investigation of these points in the United States and Canada, where rock salt is likely to exist. Free use ought to be made of the diamond drill for exploration as the quickest, most economical, and most reliable means to obtain the necessary data, and, where circumstances are favorable, the mining of rock salt ought to be introduced instead of the manufacture of salt from brine.

GODERICH, October 10th, 1877.

THE LATE OPERATIONS ON THE MARIPOSA ESTATE.

BY CHARLES M. ROLKER, E.M., RENO, NEVADA.

(Read at the Philadelphia Meeting, February, 1878.)

THE Mariposa estate, a grant made by the Mexican Government to Juan B. Alvarado, during the time when California was still under the dominion of Mexico, was purchased in 1847 by J. C. Fremont, and the United States patent issued to him in 1856. By sale, or its equivalent, money advanced, the property came into the hands of the Mariposa Company, June 25th, 1863, and through a varied existence of work and temporary inactivity, has as yet been kept as an undivided property, and rests at present with the Mariposa Land and Mining Company of California. I pass over this period of 15 years without giving the history of the ups and downs of the estate, partly because it is familiar to many, and also because I think in such a case this paper would assume too much the character of a narrative.

The estate is situated in Mariposa County, California, about 170 miles southeast of San Francisco. It begins in lat. 37° 26′ 38″ north, and long. 119° 55′ west, and runs 6 miles north; thence 6½ miles west; thence 5 miles northwesterly towards the Merced River; thence 8½ miles southerly; thence 3 miles easterly; thence 1 mile southerly; thence 2 miles easterly; thence 2 miles southerly; thence 2 miles easterly; thence 1 mile southerly; thence 2 miles easterly; thence 1 mile northerly, and thence 2 miles easterly to the place of the beginning; embracing 44,387 acres (70 sq. miles) more or less.

To describe this vast estate in detail as to its full geology, its numerous quartz veins, its many facilities to exploit them and work them by cheap methods, would lead me further than I intend to go at present, and I will content myself to describe the latest workings of the company and its immediate field of operations.

As long ago as 1860 the late Dr. Adelberg advised the running of an adit from the northwestern edge of the estate at Benton Mills on the Merced River. His object was to undercut the deepest workings of the then paying mines on the estate—the Pine Tree and Josephine.

Following this advice, the tunnel known as "River Tunnel" was commenced. Its entrance is in S. 5, T. 4, S. R. 17 E. It is run in

longitudinal or parallel direction with the occurring veins as far as the tunnel has proceeded; also with the more distant Pine Tree and Josephine veins. The tunnel entrance is on the north end of Mount Bullion, about 560 feet from the Merced River, and at an elevation of nearly 100 feet above the river bed, or 64 feet above the flume of the Ada Mill, which flume carries the waters of the river from the dam near by to the air-compressors adjacent to it, which supply air to the tunnel, and motive power to the drills employed in its advance. The object of this tunnel is the natural drainage of the distant mines proved to hold ore, and to cheapen the transportation of the ore from these mines to the Benton Mills. These mills are situated in a naturally favorable place, being located on the banks of the Merced River. They utilize its waters as motive power, thus cheapening the cost of milling materially, which, in conjunction with the lessened cost of drainage, and the doing away of any hoisting of ores, and the decreased expense of transporting it to the mills (then via tunnel and cars), will allow the company, after the completion of this great enterprise, to treat its low-grade ores. This tunnel once completed, and the mines and general affairs properly managed, there is no reason to doubt but that this estate can again be put on a paying basis. Without this tunnel, the Josephine and Pine Tree Mines, I think, would probably remain abandoned, to judge from the low grade of ores which both yielded at the time of abandonment. Other portions of the estate would have to be resorted to, far away from the cheap Benton Mills, such as Mount Ophir, Princeton, Eclipse, and Crœsus, the latter two southeast of the former, and more or less as yet of a prospective character, but with excellent showings. The company would, in this case, have to use steam-power, and when it is also considered that the older and still gold-bearing mines of the southeast end have been allowed to fill with water and their timbers allowed to decay, and that in reality the old work would have to be done over again, it would appear that the company is pursuing the best thing it can do, provided the stockholders do not lose patience in seeing no returns for the apparently long period of outlays. I say no returns, not from the fact that I think the whole distance up to the joint mines will be run without encountering perhaps here and there payrock, but from the fact, that in such an undertaking the hope of returns should not be based on uncertainties. If any payrock should be found before the completion of the tunnel, it should be accepted as a gift, but it should not be calculated upon. The stockholder, made sanguine with hopes

about what he *may* find a few hundred feet ahead, will, if it does not happen to come true, lose courage, and if this loss of enterprising spirit spreads, it will endanger the successful completion of the work undertaken.

As stated before, the tunnel entrance is made on the northeast end of Mount Bullion, and the original course laid out for it is S. 52″ 32′ E. This course has, however, not been adhered to, though nearly so for the first 1400 feet, as will be readily seen on inspecting the map of the tunnel. (See Plate I, Fig. 1.) The tunnel at its entrance stands in slate, which is much broken up and changed, being more of a clay slate than the true black slate. This character of slate is traceable for about the first 50 feet, when it commences gradually to harden and assume the properties of true slate. As the tunnel advances the slate becomes harder and blacker, and is occasionally interspersed with iron pyrites. At 200 feet a small quartz seam crosses the tunnel from the west to the east. This is not marked on the map, as it is of little account and no value. At this point, however, a character of the quartz veins and seams is developed, which repeats itself throughout the tunnel as far as it has gone. Around and near the veins of quartz, instead of true slates, argillaceous and talcose slates and schists are found. Often, also, portions are found approaching a serpentine as near as possible, or if they are not true serpentine, metamorphosed into such. Steatite occurs also in places near the vein. I shall recur to this later.

The softer ground continues up to about 400 feet, when again some quartz is encountered, this time crossing from east to west, likewise not marked on the map. It has been assumed that this is the same quartz seam met with at 200 feet, and that it has reversed its course. I think this, however, erroneous, and believe it to be the quartz, well marked, a few feet to the east of the tunnel entrance.

Then as we go along further, we find, retreating from the quartz, the character of the true slate return, and it remains so until we reach the 825 feet point, with the following intermediate changes: At 500 feet the slate is somewhat coarse in texture but hard and compact. It changes 50 feet further to a fine-grained black slate, sprinkled with sulphurets, and continues so up to about 670 feet. Here a number of quartz seams make their appearance for about a distance of 50 feet or more, which all pass out finally on the east side of the tunnel. Then follow in succession the finer-grained slates pretty freely charged with pyrites, similar to the ones passed through before.

At 625 feet we find the tunnel widened to 11 feet, nominally, while it measured 7 feet by 7 feet 6 inches high before.

At 825 feet we again encounter a soft rock, as near as possible a talcose slate, in which here and there are found boulders of a harder nature, locally termed greenstone. This formation runs diagonally across the tunnel. It changes gradually to a real talcose slate, which, after being cut through, discloses a narrow seam of quartz traversing the tunnel, likewise diagonally, under 17°. At 1050 feet from the entrance, the ground, before reaching the quartz, is exceedingly soft and heavy, wet and damp, requiring strong timbering to keep it up. It is probably this ground, with the insignificant size of the quartz seam, at the point of intersection by the tunnel (a few inches), which made Mr. E. C. Burr, the former very efficient manager, attach less importance to the quartz seam than it deserved. To avoid the heavy ground, which would admit of but slow progress on account of timbering, I think the west branch of the tunnel was run with the idea of swinging afterwards towards the course of the original tunnel line again. However, the exceedingly hard and tough crystalline slates, which here took nearly the character of a trap, made them finally give this up, especially as the diamond drill hole No. 3 (see Plate I, Fig. 1) disclosed the now pretty strong vein to be considerably to the east instead of to the west, as many supposed. The main course of the tunnel was again resumed. Continuing in the tunnel, a rock was found on the west side or footwall of the vein, which is locally called greenstone. I retain this name, but shall, however, later on recur to the subject.

This greenstone continues to form the footwall of the quartz vein, as disclosed by diamond bore No. 2. It is, however, a narrow belt only at present. Passing on from diamond bore No. 2, which was started in black slate, the tunnel continues to run through black slate, excepting two outrunners of greenstone, varying in width as the plan shows. Up to about the 1273 feet point, where the diamond bore No. 4 was made, the slate retains its true character.

In following along diamond bore No. 4, for a moment we again find the series of quartz stringers encountered in the main tunnel near the 670 feet point, and following them on the map, we again note them in diamond bore No. 10, where some of them have grown to the size of a foot nearly. The end of bore-hole No. 4, as well as No. 10, shows a rock, which according to the local nomenclature, would be termed a serpentinoid greenstone. Paragentic inferences should lead me to assume, that these quartz stringers are quartz feeders, be-

longing to a vein lying further east than diamond bore No. 10 pierced. To cut this vein was my object when I ran this diamond bore, and only the broken ground met with, which wedged the drill, and lack of time to run a new hole here, prevented me from proving this vein. Turning now again to the main tunnel, near the 1273 feet point we note the slate to be harder and very fine-grained, tough and irregular to blast, and this character increases the further west the tunnel runs from the vein. In order to insure quicker progress by entering softer ground, and to be near the now well-established quartz vein, the tunnel was deflected east from the original tunnel line about the 1450 feet point, entering gradually the softer slates. At 1604 feet a crosscut was run east to strike the vein. After passing through about 40 feet of slate and then through 20 feet of greenstone the vein was struck, 4 feet strong, resting with its foot on talcose slate and dark serpentine in places. From here a drift was then run on the vein in a southerly direction for about 210 feet. At present only about 30 feet are open to inspection, the remainder having been allowed to cave in. The following remarks about the south drift and Vermont shaft I take from general records; I regret very much that I could examine neither personally. The vein in the south drift is varying. It is at places nearly solid, then again mixed freely with broken slate and filled with clay. Occasionally vertical quartz bands run through the vein. The whole showed that the vein was irregular and within reach of some disturbing agency. A horizontal fault filled with clay ran in a southerly direction with the drift for nearly half its length, and this, no doubt, had some influence on the contents of the quartz there. In the latter part of the drift the quartz alternated with vertical slate bands, both carrying pyrites and occasionally gold. The occurrence of auriferous quartz in this drift seems not as yet to have been general, although good hand specimens are said to have been taken out. At the commencement of the south drift the Vermont shaft was sunk. This shaft showed a talcose slate hanging wall with gouge for the first 30 feet, which then gave place to the black slate, which forced its way to the vein, and produced a bulge in it. The hanging wall seems to have squeezed the vein, out of which the quartz disappeared, maintaining only the clay fissure. At about 60 feet depth, quartz stringers came in again, and at 72 feet depth records show them to have widened to 12 and 16 inches. Water had been coming in freely as they descended. At a depth of about 75 feet sinking was desisted from, the water preventing further progress, the

windlass being inadequate to the requirements. The quartz had here widened to 2 feet. Stoping south was then commenced, but soon again abandoned on account of the water. After this, overhand stoping was commenced at 180 feet from the Vermont shaft, and the stopes raised to about 20 feet above the south drift roof, when another pinch in the vein was met. Before this, the vein had widened to 4 feet. Assay records from this portion show very well, but they cannot have been average assays, as the mill only yielded about $4.50 per ton, as far as I could learn.

Returning again to the main tunnel, we observe alternate passages of greenstone and slate until we approach the 2000 feet point from where crosscut No. 2 was started. This crosscut after passing out of the slate enters greenstone, which gradually shades off into talcose slate. At 90 feet east from the tunnel the vein was cut, standing 5 feet thick and displaying a ribbon-like structure. Following the quartz came slate holding quartz breccia, and then black slate. Both here as well as in crosscut No. 1 a well-defined gouge was noticed resting on talcose slate. As the main heading and crosscut No. 2 were run simultaneously, on completion of the latter, the former had approached the vein, and any extensive explorations from crosscut No. 2 were desisted from. After cutting through greenstone and finally talcose slate, the main tunnel cut the vein at a distance of 2312 feet from the tunnel entrance. The quartz, though mixed in the beginning with slaty matter, was purer than any of the quartz met with before. It soon developed into a well-defined vein with a good gouge on footwall. An assay made by Mr. E. C. Burr, of the eastern portion of the vein, showed $11.71 per ton.

The character of the vein was ribbon-quartz in the centre, and a pure quartz streak east and west of it, showing free gold in the pan. In order to give a more lucid idea of the vein and its character I have prepared a horizontal plan of the vein for nearly the whole distance that the main tunnel ran on it, which, with its explanatory notes, will give a better idea of the vein than a mere description. (See Plate I, Fig. 2.) The footwall is soft greenstone, excepting intermediate places of talcose slate. The centre of the vein, as a rule, exhibits the ribbon-like character, and next to it is solid white quartz occasionally speckled with chlorite, arsenical pyrites, and iron pyrites. Covering this, follows a layer of quartz, holding numerous slate breccia, and in the farther progress of the tunnel, the slate holds quartz fragments instead of the reverse. Very frequently bands of greenstone incase the quartz in the middle or on the western side of the vein, which adds to its banded appear-

ance. The later portion of the vein from 2470 on, is heavily mixed with black slate, and at times the vein looks more black than white. All through the first portion of the vein small quantities of free gold were found, specimen assays or selected bands running often high. I append some of the assays made.

Feet. Distance in tunnel.	Value in gold.	Value in silver.	Total.	By whom made.
2334 Eastern vein portion.	$8.13	$3 58	$11.71	E C Burr.
2360 Main heading.	33.77	1.69	35.46	J. Fischer.
2360 Centre.	25 32	1.72	27 04	" "
2360 Drillings.	21.40	1.77	28.17	" "
2385 Heading.	48.11	2.27	50.38	" "
2470 Near footwall.	13.56	3.86	17.42	" "
2480 Average.	12 66	4 11	16.77	" "
2490 Average.	4.25	3.18	7.48	" "

The mill product fell considerably short of these figures.

At the 2387 feet point, I cut a chamber, with the intention of sinking a shaft on the vein for some distance, to see if the rock below was not better than the tunnel rock. The cutting out of the chamber disclosed the vein to continue still beyond the tunnel, as marked on the map of the vein. The quartz holding the slate particles continued for 3 feet, more or less, but on testing by the horn-spoon (in preference to fire assay for gold quartz), showed no gold.

Overlying these 3 feet of quartz is a narrow band of slate, generally 2 to 3 inches thick, marked (*b*) on the map of the vein, on which a 12-inch layer of solid ribbon-like quartz rests, marked (*c*). This is overlaid by 12 inches of slate, on which, again, 3 feet of quartz rest with, I may say, amygdules of slate scattered through it, their average size being about $\frac{1}{2}$ inch by $\frac{1}{4}$ inch; this portion is marked (*e*). The vein terminates with an inch or two of black powdered slate gouge, after which the solid hanging slate comes.

On testing the ribbon-like quartz by the horn-spoon, I obtained quite a lively color of gold. To test this portion, however, more thoroughly, I took about 35 lbs. of an average sample from this ribbon quartz, and, after passing it through a 60 sieve, worked it all by the horn-spoon. The remaining gold I collected with mercury, which I afterwards retorted, and the gold I obtained, referred to the ton, amounted to a little more than $9.00. I prefer this method of assaying the gold ores, as coming nearer to practical mill results.

The shaft, however, was not sunk, as the financial embarrassment of the company overtook us the very day the drill was pointed down-

wards. The dip of the vein at this point is 64° 05′. Elevations of the vein at the 2470 and 2480 points, I append on account of the assay results obtained here. (See Plate I, Fig. 2.) At 2400 and 2450, an upraise in the vein proved to be of little importance, and was soon abandoned. I should say this point was badly chosen, for, just here, a fault filled with decomposed quartz and clay sets in and across the vein from the footwall.

At the 2529 feet point, the footwall of the vein is talcose slate; at 2583, the talcose slates shade off gradually into the greenstone. After the vein leaves the tunnel, it becomes again dryer, and after passing two quartz feeders, follows on through black slate, intercepting between 2950 and 3020 a few greenstone stringers. The slate here was variable, changing frequently to the hard trap-like slate. (See Fig. 3.) About 3043, the final greenstone out-runners again come in from the east, which are soon pressed out in wedge shape by the following schistose rock assuming locally a western pitch, instead of an eastern one, as the country rock generally has. On finding the tunnel again close to the vein, by diamond bore 11, the tunnel was swung parallel to the course of the vein, as it did not pay to run on the vein, since the latter contained its gold only in sulphurets of iron. I affix some assays of diamond bores.

DIAMOND BORES.	DISTANCE.	GOLD IN SULPHURETS.	GOLD BY HORN-SPOON.	BY WHOM MADE.
	Feet.			
Diamond bore, No. 6	2724	$14.00	.....	J. Fischer.
" " " 8	2950	8.60	Traces.	C. M. Rolker.
" " " 10	3065	8.88	.....	" "
" " " 12	3010	8.27	.....	" "
" " " 12	3175	0.60	.....	" "
CONTINUATION OF OLD BORE-HOLES.				
Quartz as encountered in succession. Old bore-hole, No. 12.	3175	4.95	.....	" "
" " " " " 12.	3175	0.37	.....	" "
" " " " " 12.	3175	3.26	.....	" "
Combining the last two samples, and concentrating by horn-spoon to sulphurets, they assayed	.....	179.88	.....	" "

The last assay I made to ascertain the richness of the sulphurets, which were very heavy and in abundance at this point. In bore-hole No. 12, I also found part of a core of dark-green serpentine, holding a thin leaf of pure gold, which specimen I regret I sent to the eastern office. Gold in talcose slate I saw frequently on the estate, but this is the only instance I noticed it in the dark-green serpentine. To test the quartz east of the old vein, which there showed so poor (60 cents), I ran diamond bore No. 13, which struck a more

or less solid 5 feet of quartz about 100 feet east from the tunnel. The quartz seams of bore No. 12, behind the vein, are evidently feeders to this quartz of bore No. 13, which was dark-blue in appearance, and showed specks of gold in several instances. Assays of these cores were not made, as the works closed down while the drill was still running. The old vein has either been run out or has been pinched locally to a narrow clay seam, at any rate, I obtained nothing but a seam of quartz at the point where the vein ought to

FIG. 3.

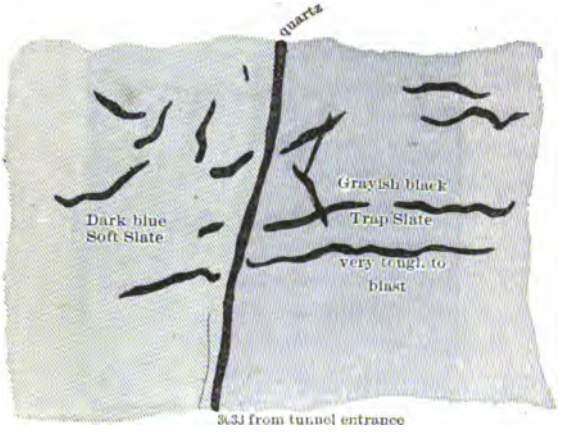

have been. Furthermore, the dark serpentine which formed the hanging wall up to 3063, has given place to what they term locally the coarse greenstone, and only traces of dark serpentine, narrow bands, are found between 100 and 150 feet from tunnel. The quartz vein discovered by bore No. 13 is either an entirely new one (an eastern vein), or else it is a side branch, and then the best part of the main vein, which has run off between bore No. 10 and bore No. 12.

Returning now to the main tunnel, I append an interesting sketch of the tunnel face at 3091. (See Fig. 4.) It shows the change of the compact greenstone to the talcose schist and the dark serpentine, on the joining of the former with the black slate.

Further on, the tunnel face continues in black slate, changing, off and on, into trap slate and *vice versa*. The total length of the tunnel when the work stopped was 3331 feet.

The boring in the tunnel was done by the Burleigh rock drills, the tunnel size, which are attached to a carriage, arranged to mount four drills. As motive power, compressed air was used, which is furnished by a No. 7 compressor, and conducted from the air-tank to

Originally charged	No. 1 large bags,*	832.	Used in reloading,			
" "	No. 1 small "	70.	" "	"	85 bags.	
" "	No. 2 large "	888.	" "	"	871 "	
" "	No. 2 small "	96.	" "	"	144 "	
" "	701 exploders.		" "	"	295 exploders.	

At another time.

Originally charged	No. 1 large bags,	568.	Used in reloading,			
" "	No. 1 small "	174.	" "	"	56 bags.	
" "	No. 2 large "	785.	" "	"	437 "	
" "	No. 2 small "	97.	" "	"	74 "	
" "	576 exploders.		" "	"	290 exploders.	

The quantity of powder used per running linear foot varies according to the nature of the ground; but it is always large, because the slates, etc., are attacked edgeways. The average for six months amounts to:

No. 1 Hercules powder per linear foot, 5.6 lbs. to 8.3 lbs.
No. 2 " " " " " 8.3 lbs. to 11.2 lbs.
Consumption of exploders varies from 7.3 to 9.4 per linear foot.
" " " connecting wire " 2 1 ounces to 3.3 ounces per linear foot.
" " " steel " 1.70 to 1.95 lbs. per linear foot.

I add the different distances to which the tunnel was driven at different dates.

DATES.	DISTANCE.	NO. OF DRILLS.
	Feet.	
June to November, 1874.	634	One drill; full shift.
April, 1875	684	Two drills; full shift.
June 4th, 1875	789	" " "
July 2d, 1875	911	" " "
July 17th, 1875	950	" " "
August 3d, 1875	1015	" " " }
September 4th, 1875	1100	" " " } Deflected West Branch
October 3d, 1875	1200	" " " }
November 21st, 1875	1262	" " " }
December 6th, 1875	1013	" " "
January 1st, 1876	1089	" " "
February 1st, 1876	1165	" " "
March 1st, 1876	1260	" " "
April 1st, 1876	1335	" " "
May 1st, 1876	1455	" " "
June 1st, 1876	1602	" " "
August 1st, 1876	1760	" " "
September 1st, 1876	1892	" " "
September 30th, 1876	2008	" " "
October 31st, 1876	2138	" " "
December 31st, 1876	2297	" " "
January 1st, 1877	2422	Four drills since January 9th; full three shifts.
February 1st, 1877	2591	Four drills; full three shifts.
March 1st, 1877	2708	Four drills; one drilling shift.
April, 1877	2833	" " " "
May, 1877	2947	" " " "
June, 1877	3085	" " " "
July, 1877	3241	" " " "
August 1st, 1877	3311	" " " "
August 4th, 1877	3331	" " " "

* A large bag weighs about 15 ounces; a small bag weighs about 8 5 ounces.

I also add some of my results with the diamond drill, as it may be of interest to some of the members. I beg to state that I am convinced that the cost of diamonds would have been less, and the bore-holes would have been drilled in less time and at less expense, if I had had a proper supply of diamonds on hand from which to select. I also wish to note a fact which I have not read elsewhere, namely, in ground highly charged with iron pyrites the diamonds generally crumbled. It seems as if it disintegrated them to some extent.

Having given a general description of the latest underground work, I wish now to say a few additional words with regard to the surface surroundings.

A glance at the general map of the estate, which I copied in its outlines from a map of Max Strobel (see Fig. 5) shows the occurring veins all to have one general course, that is, northwest to southeast. The main croppings appear to be one continuous lode, from the Pine Tree and Josephine, where the vein is split into two, to Bear Valley and past it, along the slope of the Bullion Ridge to Mount Ophir and Princeton, and again in a split condition further on. They run sometimes apparently converging and then again diverging. East of Princeton are the Mariposa vein outcrops, and west of Bear Valley is the Oso vein with its croppings. The whole appears as a net of quartz veins, with the main axis running northwest and southeast. Referring to the map, we see Mount Bullion and its ridges form the northeast boundary, commencing on the Merced River. The country rocks have a similar trend to the outcrops, with a general dip to the northeast. Referring to the special map of the surroundings of the river tunnel (Plate I, Fig. 6), we notice on the northeast a heavy belt of serpentine, which rises with Mount Bullion. Exposed at intermediate points up the hill, back of the Josephine, it shows again boldly at Mount Ophir, and further southeast between Agua Fria and Mariposa. Skirting this northeast serpentine belt, as well on the east as on the west, we see the well-defined clay slates with their thin edges marked out sharply, and on the west side the dark blue slates. This belt of slates incloses the quartz veins and its general trend follows the axis of the valley all through the estate.

Although in general the quartz veins correspond to the general trend of the slates, in detail they are not always conformable with them, as is especially well defined near and around the Princeton vein, where, as Prof. Blake already pointed out in 1864, this vein occupies the line of break between two distinct bodies of slate, the

Diamond Bores made on the Mariposa Estate during the Summer of 1877.

WHEN COMMENCED.	WHEN FINISHED.	TOTAL TIME CONSUMED.	TIME FOR SETTING AND TAKING DOWN MACHINE.	TIME FOR DRAWING CORE-BARREL.	LENGTHENING RODS.	REAMING HOLES.	LACK OF AIR.	LOOSENING DRILL.	ACTUAL DRILLING TIME.
May 7th.	May 10th.	72 hours.	4 hours 30 min.	16 hours 25 min.	12 hours 16 min.	.....	.....	.....	38 hours 49 min.
May 18th.	May 24th.	146 hours.	5 hours.	16 hours 57 min.	18 hours 46 min.	.....	8 hours 15 min.	23 hours 15 min.*	78 hours 47 min.
June 4th.	June 5th.	34 hours.	6 hours 30 min.	6 hours 53 min.	3 hours 41 min.	.....	.....	.....	16 hours 56 min.
June 5th.	June 7th.	34 hours 6 min.	2 hours 45 min.	8 hours 47 min.	3 hours 47 min.	.....	.....	.....	18 hours 41 min.
July 2d.	July 6th.	80 hours.	3 hours 30 min.	18 hours 2 min.	4 hours 4 min.	15 hours 27 min.†	.....	.....	38 hours 57 min.

FEET DRILLED PER HOUR, INCLUDING DELAYS.	FEET DRILLED PER HOUR, EXCLUDING DELAYS.	COST PER FOOT EXCLUSIVE OF DIAMONDS.	COST PER FOOT, INCLUDING DIAMONDS.	COST PER FOOT IN DIAMONDS.	DEPTH OF HOLES.	STRATA PASSED THROUGH.
1.94 feet.	3.50 feet.	$0.93	$1.25	$0.32	140 feet.	Slate and metamorphic schist.
1.59 feet.	2.99 feet.	1.01	1.33	0.32	231 feet.	Highly pyritiferous slate.
2.32 feet.	4.64 feet.	0.49	0.79	0.30	79 feet.	Slate and serpentinoid rock.
2.19 feet.	3.99 feet.	0.67	0.99	0.32	74⅔ feet.	Slate and metamorphic schist.
1.70 feet.	3.50 feet.	0.82	1.15	0.33	186⅓ feet.	Slate and metamorphic schist.
Average.....1.948 feet.	Average...3.724 feet.	Average.....$0.784	Average.....$1.10	Average.....$0.318	Total.....661 feet.	

* Drill entered broken ground and stuck; was finally, after straightening out several hooks and breaking two blocks and three falls, extracted with a hydraulic jack, which accounts for the time lost.

† Had to ream on account of an insufficient supply of diamonds to keep up the gauge of the bit.

eastern ones varying in trend from N. 45° to 90° W. The western ones abut against the outcrop of the vein, "as arcs of a circle do against their respective chords."

Prof. Blake, who examined especially the middle portion of the

FIG. 5.

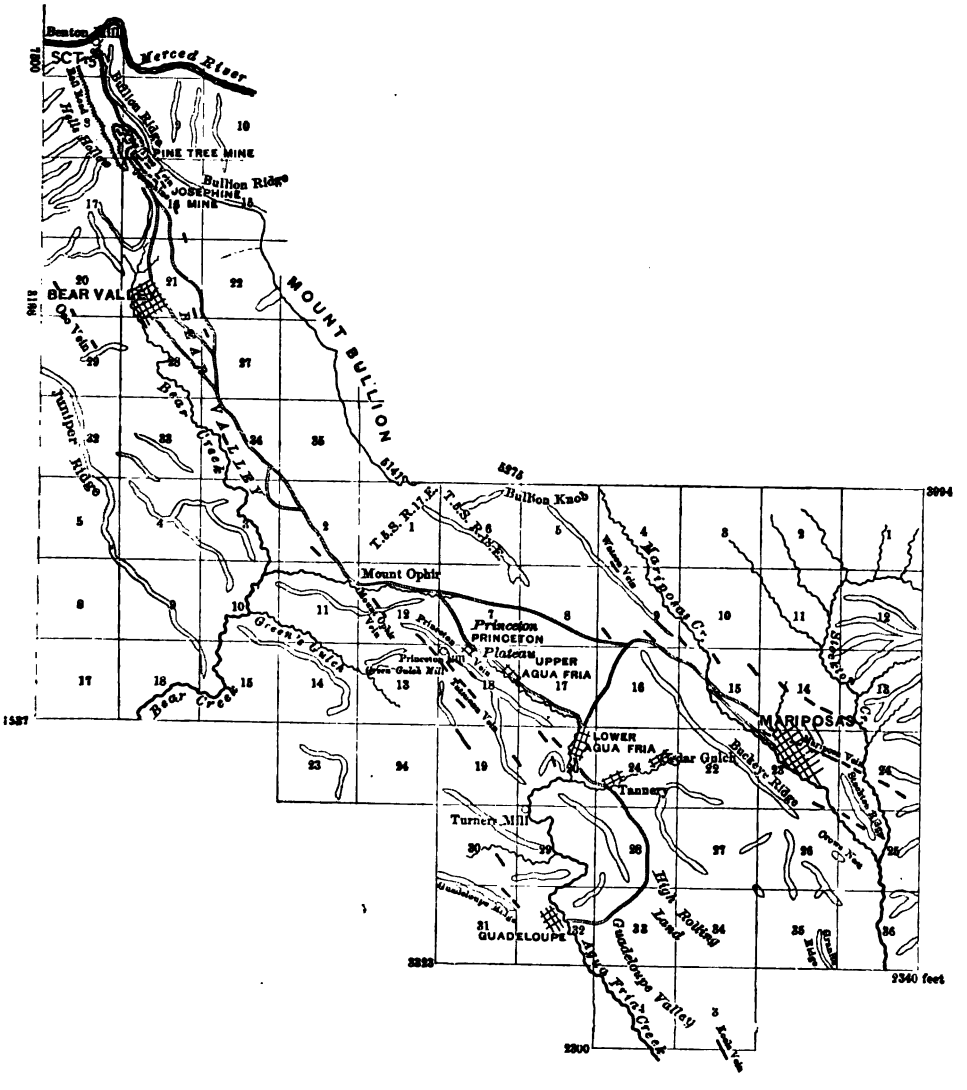

estate, including Princeton Mine, made a very interesting cross sectional examination of the country in a general northeast and southwest direction. I add it, as it is of general interest. The

southwestern end is taken along Bear Creek, the middle portion across the Princeton vein, and the remainder along a line nearly over upper Agua Fria, northeastward to Mount Bullion range.

The following formations are represented:

Coarse heavy conglomerates, metamorphosed.
Compact crystalline slates (crystalline cleavage).
Slaty conglomerate.
Argillaceous slates, regularly stratified (thick series).
Sandstones and sandy beds (thin).
Princeton gold vein.
Argillaceous slate and quartz veins.
Magnesian rock and quartz vein.
Argillaceous slates.
Slaty conglomerate.
Compact slates.
Greenstone, limited in extent, probably a metamorphic sandstone.
Sandy slates and sandstones.
Serpentine and magnesian rocks (the northern extension of Buckeye ridge).
Compact slates, crystalline and much changed in places by metal morphism.
Bullion Range, metamorphic sandstone and heavy conglomerate, the so-called "Greenstone."

This may suffice for a general outline of the geology of the estate, and I now recur to the northern portion, the River Tunnel. In the special map of the River Tunnel's surroundings, I have made use of the original tunnel line, which has been laid out by Mr. Thomas, county surveyor, and taking this as a basis and assuming it to be correct, I have connected with this and laid down the underground exposed quartz as determined by my own survey, as also the different and reticulated quartz croppings of the surface. I do not claim absolute correctness for the mountain roads as put in, for portions of them are filled in by guesswork, as I did not have time to finish my topographical survey owing to the stoppage in the work of the estate by foreclosure of the Kelly and Donohue mortgage. A question which arises is: Which croppings correspond to the vein which the tunnel has laid open? I cannot speak with absolute certainty owing to the premature closing of my survey, but I will say that two opinions are generally advanced: the one is, that the vein crops out

at the Prospect Hole (see Plate I, Fig. 6), and thence runs up the line of croppings to the Queen Specimen shaft. The other is, that the vein crops out at the place marked old works, thence goes easterly and swings around in a curve in the line with the croppings up to the Queen Specimen shaft. I believe in the latter. I regret very much that no office records were taken of the exact dip of the vein in south drift 1 and 2, and the raises which, with absolute elevations, would settle the question, allowing for small variations in the dip. In the chamber I made the dip to be 64° 05′. The shaft of the Queen Specimen Mine, which is an incline on the vein, I made to have 68° 38′ dip. The latter is, however, no indication of the underground position of the vein, for Mr. D. S. Gourguet, the company's clerk, who mined in it years ago, told me that the vein had been faulted abruptly a little over 100 feet from the surface, and that they never found the vein again, because they did not search in the proper way for it. If, then, we imagine a line drawn from the old works easterly to where the croppings swing westward towards the Queen Specimen shaft, and compare it with the curvature of the vein underground, we will see that both curves nearly correspond. If we presume that the Prospect Hole shows the vein, and that it runs from there straight to the final curvature of the vein croppings to the Queen Specimen shaft, and take as the starting cropping of the vein, the croppings opposite the blacksmith shop (see Plate I, Fig. 6), then the continued course of the underground vein will fall west of its croppings overhead, which with a vein of an easterly dip is impossible unless part of the vein is distorted, which is in reality not the case. If the Prospect Hole shows the vein in continuation of the half curve towards Queen Specimen shaft, regardless of the croppings mentioned before (opposite the blacksmith shop), then the continuation of the cropping line would cross the tunnel line, as originally laid out, at nearly the same point where the underground vein passes it. In considering these points I think I am entitled to my opinion that the old works are really situated on the vein disclosed by the tunnel operations. This vein, I think, runs on the surface towards Hell's Hollow. Taking this then for granted, I noticed that the croppings split where the main curvature sets in towards Queen Specimen shaft, the split running more easterly of what may be called the main vein.

Going back to the river, along the Broadhead Canal, I noticed two well-defined quartz veins, which I laid down; they cut through Mount Bullion, out of the belt of clay slates, into the serpentine belt, and run again up the hill, everywhere plainly marked, keeping east

of the underground vein. The continuations I had no time to determine, hence I did not lay them down on the map. Their dips are likewise to the northeast, as is that of the worked vein. The accompanying sketch (Fig. 7) gives a sectional (probable) view across the hill and tunnel, as determined by surface observation and exploration in diamond bore No. 10. The quartz veins spoken of, cut back of the diamond drill road through the serpentine belt. Another interesting feature is a narrow bed of compact crystalline limestone, which is perfectly conformable to the surrounding clay slates. This is also marked on the special map with the other quartz veins. As to the question, whether the Pine Tree vein runs into the River Tunnel

FIG. 7.

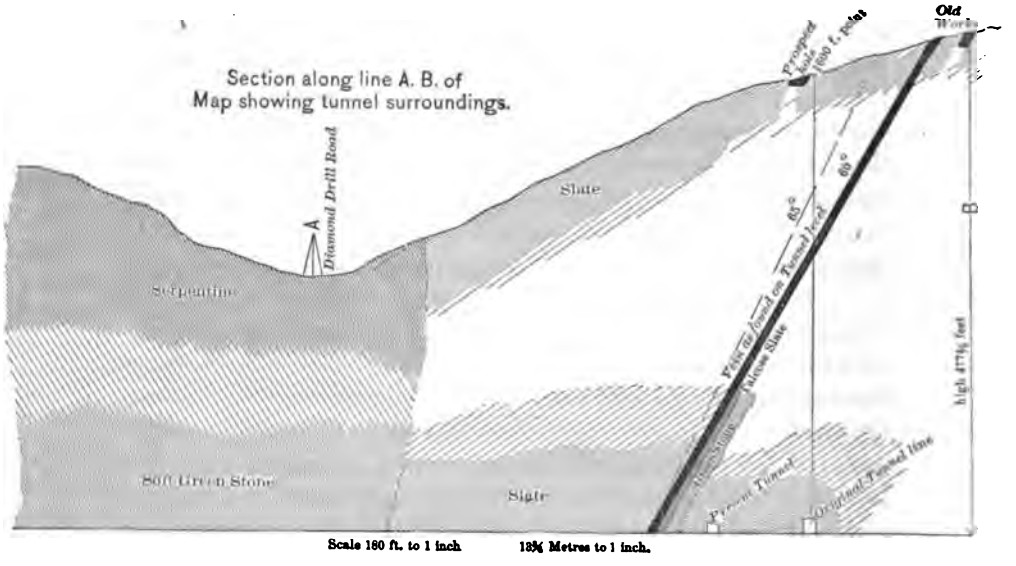

vein, I will say that I think that the Pine Tree vein and Crown Point croppings are one. It may be, in fact it is very likely, that the Crown Point croppings are connected with the underground exposed vein by a side or companion fissure, for the whole of this hill is simply a network of veins, as the surface croppings tend to show.

Inspecting for a moment the map of the underground tunnel, and of the formation it passed through, we notice formations marked greenstone. I do not believe this to be greenstone. From the first time I saw it I doubted it, and since then I have succeeded in collecting out of the tunnel alone a full series of specimens, proving to me the metamorphosis of the rock. I was very careful in making this

collection, as I was aware that many expert mining engineers had examined this estate before me, and pronounced it a greenstone, excepting Mr. W. Ashburner and Prof. Blake, who, as I mentioned before, call it probably a metamorphosed sandstone. I consider the rocks called greenstones metamorphosed schists, showing the characters of hornblende and talc schists. I have gathered specimens, which, to use the local nomenclature, are first, hard and tough greenstones, showing, in some specimens, the change to the soft ones; again, to the softer and softest greenstone, which to me look like a talcose schist, for want of a better name. But not alone in the "greenstones" do we find metamorphic action. The slates change all the way from a traplike-looking gray slate to a fine pure bluish soft black slate, widely different in these end products, but with gradual transitions, and, as I claim, with no missing links. I am satisfied in my mind that this "eruptive greenstone" is an illusion, and to me this section shows unmistakable evidences of floods and sedimentary origin, with equally lucid proofs of local and high metamorphosis. That portions of this territory are sedimentary is known to all of you. Prof. Blake reported, about 1860, to have found a "Lima" near the Josephine, which he called "Lima Erringtoni," in honor of Miss Errington, who called his attention to the fossil bed. Prof. Whitney reports fossils found on the estate in his "Report on California," and to this day the company has in its office at Bear Valley, a large fossil oyster, which measures, in its present broken state, 8½ inches in length by 6 in width. Originally the oyster must have been 10 inches long. I class this oyster as most probably the "Ostrea Titan" of the Tertiary. It was found two miles south of Bear Valley.

RENO, NEVADA, February, 1878.

NOTE.—Since the reading of this paper in February I have made a short visit to New York, and took occasion to have some microscopic slides prepared by Mr. A. Julien, from rocks kindly proffered by Dr. J. S. Newberry, to whom I sent a suite from the estate last summer.

The microscopic examination of these rocks bears out fully what I wrote last February. They are metamorphic beyond doubt. The rock taken from the diamond bore opposite the 3175 feet point appears as a talcose gneiss. The quartz in this section was distin-

guished, under a low power, in clear colorless granules of angular form, thus indicating a sedimentary origin. The feldspar appeared in a decomposed condition. Talc-like mineral is distributed between the quartz irregularly, sometimes thready.

The rock in the footwall of vein about the 2942 feet point, appeared as a talco-silicious schist. It consists mainly of quartz and tremolite, with fibrous talc interspersed, about 3043 to 3048. The microscope showed a talc schist to a pyritiferous-talco-feldspathic schist. This latter section required a power of 800 diameters to show the talc and feldspar, and occasional tremolite blades. The rock taken from the "well-marked greenstone beds," probably 2000 feet in direct line east from tunnel, was shown up well as an altered hornblende schist, holding mainly quartz in clear, colorless, angular grains, and tremolite in scattered crystals and needles, also radiating groups of needles and blades. Altered hornblende shows well, in large-bladed scales, with good terminations and the characteristic cleavage.

I take occasion to add these results in verification of what I had already asserted, and to convince those who may have thought my previous statement a rash one.

NEW YORK, April 19th, 1878.

FLUXING SILICIOUS IRON ORES.

BY T. F. WITHERBEE, PORT HENRY, ESSEX COUNTY, NEW YORK.

(Read at the Amenia Meeting, October, 1877.)

THE subject of an article in the *Engineering and Mining Journal* for October 13th, 1877, namely, Blast Furnace Treatment of Silicious Iron Ores, is of great interest to myself, and doubtless to many others who have been troubled with a seemingly unaccountable percentage of silicon in their pig iron.

It is to be regretted that the author of the article did not give us complete details of his charges, and thus prevent a possibly fatal error in the very beginning of the discussion of the points raised in his communication. As it now stands, I think we will have to fall back upon the statement that, "every conceivable mixture of fluxes and ores (A and B) has been used."

Let us first, in order to simplify the calculations, do with the

analyses what was doubtless done with the ores, *i. e.*, expel the water and rearrange the figures accordingly. We will then have

Analysis A.		Analysis A, less water, etc.
Oxide of Iron,	75.95	98.41
Alumina,	.07	.09
Lime,	.16	.20
Silica,	.17	.22
Phosphoric Acid,	.14	.18
Sulphur,	.69 = 77.18	.88
Water and Organic,	22.84	

Analysis B.		Analysis B, less water, etc.
Oxide of Iron,	71.05	84.34
Alumina,	1.82	2.16
Lime,	1.68	1.94
Silica,	8.65	10.27
Phosphoric Acid,	.046	.054
Sulphuric Acid,	1.02 = 84.216	1.21
Water and Organic,	10.12	

A simple inspection of corrected analysis A shows that it is a remarkably pure ore, requiring no addition of flux whatever, with the exception of normal (not too acid) blast-furnace cinder in sufficient amount to insure a blanket for the reduced metal in the crucible.

With ore B the case is different, and as the furnace was worked with a mixture of the two ores, let us assume that they were used at some time, in equal proportions, in which case the average composition would be, omitting the iron, sulphur, and phosphorus, which are of no interest in calculating the flux:

$Al_2O_3 = 1.125$; $CaO = 1.075$; $SiO_2 = 5.245$ — surely not a *siliceous* mixture, if by that term is meant one uncommonly high in silica.

The limestones when used in equal amounts, $\frac{1}{3}$ each, would average,

	I	II	III	Average.	
Lime Carbonate,	89.68	88.78	56.89	76 78 = 43	per ct. Lime.
Magnesia "	2.60	3.19	10.60	5.46 = 2.60	" Magnesia.
Silica,	6.32	11.06	22.40	13.26 = 13.26	" Silica,

which entitles *it* to be called silicious rather than the ore.

Having had considerable experience in working ores containing about the same percentage of silica, and also those containing as high as 30 to 40 per cent., I would suggest that the mixture A and B be fluxed with the limestone as above, according to the following calculation, the cinder to contain 5 parts base to 4 acid. For the sake of reference let us first note the following:

	Monobasic Cinder.	5 to 4 Cinder.
1 of CaO is equivalent to	1.07 Silica,	and 0.86 Silica.
1 of MgO " "	1 50 "	" 1 20 "
1 of Al_2O_3 " "	1 74 "	" 1.40 "

Using the values of the fluxes in the 5 to 4 ratio, we have for the ore mixture

$$\left.\begin{array}{l} 1.125\ Al_2O_3 = 1.575\ SiO_2 \\ 1.075\ CaO\ =\ .923\ \text{"} \end{array}\right\} = 2.498\ SiO_2,$$

fluxed by the bases in the ore, and $5.245 - 2.498 = 2.747\ SiO_2$ remaining to be fluxed by the limestone.

Applying the same calculation to the limestone we find that $2.60\ MgO = 3.90\ SiO_2$ and 13.26 total $SiO_2 - 3.90 = 9.36\ SiO_2$ remaining, which requires 11.19 CaO; so that $43\ CaO - 11.19 = 31.81$ of available lime ($= 26.92\ SiO_2$).

The $2.498\ SiO_2$ remaining from the ore would require 2.90 CaO, and we have 31.81 : 2.90 : : 100 : 9.12 = per cent. of limestone required for the weight of the roasted ore free from water and organic matter, and the pig ought not to contain over 1.5 or 2 per cent. of silicon.

But here we are met by the analysis of the iron, showing,

Carbon,	3.21
Silicon,	4.03
Sulphur,	.06
Phosphorus,	.05

Now I would like to suggest four possible causes for the presence of the 4.03 per cent. of silicon found, viz.:

1st. Too high a temperature in the upper part of the furnace.

2d. Not enough lime used.

3d. More of the "B" ore and No. 3 limestone used than is stated.

4th. And perhaps the most probable—the several analyses were not made from average samples, in which case the second cause would likely be present also.

The explanation given by Mr. Davis (*i. e.*, the presence of a compound of silica, sulphur, and iron difficult to break up) rests upon high authority. An analysis of the cinder would determine the correctness of the second.

An inspection and comparison of the ore and iron analyses, however, would seem to assign the trouble to the 3d cause, without entirely precluding the 4th; for an ore mixture, such as this calculation is based upon, would contain about 64 per cent. of iron, and, allowing for the carbon 3.21 per cent., silicon 4.03 per cent.,

sulphur .06, and phosphorus .05, the resulting pig iron would contain 92.65 per cent. of iron, which would represent 1.45 ton of ore mixture per ton of pig; but 1.45 per unit of pig iron would contain only 7.61 silica, which could only furnish 3.55 per cent. of silicon = 88 per cent. of the amount found by analysis.

Again, the phosphorus in the mixture would amount to .10 per cent. in the pig iron; but as only .05 per cent. is found, this fact would tend to show that the "B" quality of ore was mostly used, as it is higher in silica and lower in phosphorus, thus accounting for the quality of the iron produced.

Of course I wish to be understood as reasoning entirely from the data furnished by the article in question, and it is possible that Mr. Davis may have figures that will entirely upset my calculations. While in charge of the Fletcherville Furnace I used New Bed magnetic ore containing 4.32 to 5 per cent. silica, and produced pig metal containing about 1.119 to 1.5 per cent. silicon, using as flux 6 to 8 per cent. limestone and blast-furnace cinder.

At one time iron high in silicon was made from the above charging; owing, as analysis of the ore showed, to the presence of 9 per cent. of silica, where only 5 was provided for, showing that a small amount of silica will destroy the equilibrium.

It would in no way retard the solution of the question to entirely exclude limestone No. 3, which can but little more than flux itself.

So much for the charcoal part.

Last winter our Cedar Point iron was found to be uncommonly high in silicon, with no apparent reason, but it was traced probably to the following:

February last, a hole was burned through our lining (see sections accompanying paper on "A New Method of Taking Blast Furnace Sections" in this volume), and a large quantity of the backing sand ran into the furnace, causing, as may be imagined, considerable trouble, the engine blowing over 18 lbs. per square inch, and then only just passing the centres. As a result, considerable scrap accumulated and was used without my knowledge.

About this time the iron was discovered to be very weak, and light-colored in its fracture, though of fair grain. The use of scrap (not then known) increased the apparent yield, so that the per cent. of limestone, in the absence of an analysis, *seemed* too high; accordingly less was charged, with apparently better results.

The cinder got very much whiter, and had every *appearance* of being too basic, especially when granulated in water; finally the

presence of silicon was suspected, and an analysis was made which showed over 6½ per cent.

The limestone was immediately increased some 800 lbs. per charge, and from time to time more was added until the silicon was reduced to about 4 per cent.

The remainder of the blast is shown on the diagram (Plate II), commencing with the week ending April 25th, 1877.

As the whole trouble arose from neglecting analysis, we commenced to take samples of every casting, April 21st, making *average* samples from such each week, and determining the silicon, the results being shown in the iron column.

In making the comparison between the silica in the ore + silica in the flux, and the lime and magnesia in the flux, the diagram does not make the case as plain as it would if a scale had been adopted, which would have kept the silica line closer to the base line (lime and magnesia), and it would also have been better to have taken longer periods of time than one week, as it is very difficult to separate one week's work from another in a large furnace.

The week ending June 23d lacks the analysis; but from my recollection it was about 4 per cent., which would seem to correspond well with the flux and silica lines.

The diagram was constructed without any theories to establish or refute, and seems to lead to the conclusion that with *our ores and flux* the silicon will be about 2 per cent. when the CaO + MgO = SiO_2 in ore + SiO_2 in flux.

This is not readily seen from the diagram, but is shown by the following calculation, viz.: variation in silicon 3.3; ½ = 1.65, added to lowest, 1.726 = 3.376; separating the week's results into two groups, consisting of those in excess of that amount and those below, and averaging the *quality, silicon* and *silica in ores + silica in flux*, in proportion to the amount of iron made, we have:

	Average quality iron.	Average silicon.	Per cent, SiO_2 in ore and flux to MgO and CaO in flux.
Silicon highest.....	2.335	4.456	1.240
Silicon lowest.....	2.571	2.364	1.045

It will be noticed that the quality of the iron seems to have something to do with the amount of silicon, but I am not prepared to admit that it is necessarily so; the last three days when blowing out

showing only 2.021 silicon, while the quality approached nearly to No. 1 iron — 1.24.

In the case of a furnace having its burden changed by taking off ore and flux, *pro rata*, it would naturally result in an increase of silicon; for it would be, in effect, increasing the amount of coal, including its silica, which would make more lime admissible and necessary. I find it requires 3 per cent. of limestone to take care of the silicious matter in good Lehigh coal.

The diagrams for weeks ending August 4th and 11th require some explanation, which is found on the furnace journal. . . . Omitting dates—"Six hours off to get iron notch"—"south cinder notch blown out, still seven hours"—"broke out at north cinder notch, still three-quarters of an hour"—"broke out, wind off one hour"—"one hour off to put valve in cylinder"—"broke out, one hour off"—"three break outs and one boil"—"broke out five times"—"one and a half hours off"—"four hours off to get iron notch." Altogether a great deal of iron was lost in the form of scrap, which was put directly back into the furnace, and appeared in the week's work ending August 11th. (The dotted line on the diagram shows the two weeks taken together.) The last charge of ore was put on at 9 A.M., 25th August, and followed up with limestone as rapidly as the materials settled until 108 gross tons were charged, then the bell was luted up with clay, and the hopper filled and kept full of water until the blowing out was completed.

At the time the wind was taken off, the furnace contained nothing but lime above the tuyeres and an insignificant salamander below.

The lime, amounting to about 1400 bushels, was washed out with water in fifteen hours after the blast was stopped. By means of the lime the pressure was kept up to the last, not getting below 7 lbs.,—a great advantage in blowing out, making it possible to burn up nearly all the coal.

The diagram shows all that is known about the composition of the gas, the analyses being made every six hours by Mr. Charles A. Colton, a member of the Institute, who volunteered to do the work.

* * * * * * *

NOTE.—Since the above was written, I have learned from Mr. Davis that much heavier lime charges have been used than are shown in my calculation, even up to 60 per cent. of the weight of the ore, but only for a short period.

In the case of the Cedar Point Furnace, it was noticed that the silicon remained quite stationary until a certain point was reached,

when it rapidly declined—more rapidly than the increased charge of lime would seem to warrant. The opposite occurred when lime was taken off, silicon increasing in a much greater ratio.

Mr. Davis also informed me that the tunnel-head of his furnace was very hot, which he proposes to remedy by increasing the size and height of the stack; also that the ore was used unroasted.

The high temperature in the upper part of the stack would tend to reduce silica, but could it be possible that the water in the ore was decomposed?

A NEW METHOD OF TAKING BLAST FURNACE SECTIONS.

BY T. F. WITHERBEE, PORT HENRY, ESSEX CO., N. Y.

(Read at the Amenia Meeting, October, 1878.)

As the forms of blown-out furnaces are of much interest to iron-masters and metallurgists, the manner of taking the accompanying sections of the Cedar Point stack is here given.

The diagrams show the original and also the final shape of the furnace after a two years and twelve days' blast, during which the following solid materials passed through it, viz.: Coal, 41,000 tons; ore, 57,000 tons; limestone, 30,000; total, 128,000 gross tons. Product, 41¼ tons per day Bessemer pig iron.

The apparatus used in taking the sections was a modification of that proposed by Mr. Frank Firmstone,* and consisted of a sliding rule, to follow around the circumference of the stack, which rule was connected by a string to a segment of a circle of 24 inches radius. The segment was carried by an arm which connected it to a hub as a centre, 2 inches in diameter. A second string was wound around the hub, and communicated motion to a pencil-carrier, the pencil of which marked out on paper the exact outline, and reduced it to a scale of ½ inch to the foot.

The whole machine was made in about three hours, with the facilities of a carpenter's shop, and gave in operation every irregularity of the lining. The sections were taken at salient points, by lowering a hanging staging on which the apparatus was placed. Tracings from the paper of the machine were made, and, as in this case several copies were required, the tracings were glued on to thin sheets of basswood, and patterns carefully sawed out with a bracket saw.

---

* Transactions, vol. iii, p. 106.

The accompanying sections (Plates III and IV) show, among other things, considerable "sagging over" at the top, as is shown by the *line of wear* falling within the original outline, caused probably by the backing sand making its way into the furnace, and leaving the lining unsupported.

Section No. 7 shows where the lining proper was entirely gone for about 12 feet square, leaving the back wall of 9-inch fire bricks exposed.

Sections 5, 6, and 7 show the cutting to have been influenced somewhat by the back tuyere, which was situated so as to get rather more than its share of wind. An attempt will be made to correct that tendency by regulating the sizes of the blast nozzles.

Section No. 10 shows the effect of pulling back tuyeres No. 6 and No. 3 nine inches each, which was done about 9 months previous to blowing out, partly to see what the effect would be, in view of a larger hearth in contemplation, and partly to break up a tendency to "tighten up," which had given so much trouble. It was thought that it might possibly break the arch, or prevent its formation, which it did completely, since no trouble of that kind was experienced after the change.

An examination of the sections No. 1 and No. 2 seems to show that no plates are required to prevent abrasion of the lining immediately under the bell, when the latter is, as in this case, 7½ feet in diameter, and the lining 13½ feet, although it is shown that such a bell puts the stock all within 2 feet of the lining.

Is it not fair to infer that a bell which necessitates the use of iron plates to protect the lining is too large? Certainly it cannot spread the materials any *further* than the lining; and, in point of fact, the rebound of the stock would leave it rather nearer the centre than if a somewhat smaller bell was used.

That the proper size of bells is an open question, is evident from the fact that the same size, 7½ feet, is used with good results in furnaces of 19 feet and 23 feet diameter of bosh, using the same ores.

Section No. 3 is remarkable from the fact of the almost entire absence of cutting at that point, the reason of which is not clear, although it might be caused by a sudden expansion of the materials caused by a rapid increase in temperature.

Drawings of two modern anthracite furnaces at Scranton, recently received, show a remarkable similarity to the "blown-out" sections of Cedar Point furnace, perhaps on account of hints taken from their own worn linings.

MEMORANDA SHOWING THE PERCENTAGE OF THE DIFFERENT EXPENSE ACCOUNTS IN MINING HEMATITE ORE AT THE MANHATTAN MINE, SHARON STATION, NEW YORK.

BY J. F. LEWIS, SUPERINTENDENT.

(Read at the Philadelphia Meeting, February, 1878.)

BELIEVING that one of the essential points in mining, as in all other business, is to know the expense incurred in each particular department, I have carefully kept an account with each department for the past three years; and, as it may be of interest to some of our members, I herewith present it to the Institute, reduced to percentages of the total yearly expense, showing the cost for materials, repairs, expenses, tools, team accounts, powder, oil, and fuel, also for labor under its several heads:

1875—Materials.		1875—Labor.		
Repairs,	.040			
Expenses,	.016			
Team,	.017	Machinery,	.055	
Tools,	.006	Repairs,	.027	
Improvements,	.030	Washer,	.076	
Oil,	.008	Pit,	.178	
Powder,	.043	Dirt,	.130	
Fuel,	.325	Superintendence,	.050	
	.485		.516	100.1

1876—Materials.		1876—Labor.		
Repairs,	.043			
Expenses,	.012			
Team,	.011	Machinery,	.090	
Tools,	.005	Repairs,	.027	
Improvements,	.007	Washer,	.065	
Oil,	.015	Pit,	.139	
Powder,	.030	Dirt,	.160	
Fuel,	.321	Superintendence,	.078	
	.444		.559	100.3

1877—Materials.		1877—Labor.		
Repairs,	.102			
Expenses,	.019			
Team,	.031	Machinery,	.050	
Tools,	.030	Repairs,	.046	
Improvements,	.031	Washer,	.057	
Oil,	.009	Pit,	.179	
Powder,	.035	Dirt,	.162	
Fuel,	.200	Superintendence,	.054	
	.457		.548	100.5

Average for the three years 1875, '76, *and* '77.

Materials.		Labor.	
Repairs,	.062		
Expenses,	.016		
Team,	.016	Machinery,	.065

Materials.		Labor.		
Tools,	.014	Repairs,	.033	
Improvements,	.022	Washer,	.066	
Oil,	.011	Pit,	.165	
Powder,	.036	Dirt,	.151	
Fuel,	.282	Superintendence,	.061	
	.459		.541	100

The repairs account for 1877 is comparatively large, since during the year our tenement houses and other buildings were thoroughly repaired and given two coats of paint, covering 4424 square yards. Another reason is that the mine was idle from July 1st, 1876, until May 1st, 1877, only our pumping machinery being used; and notwithstanding that as good care had been taken of all other machinery as was possible, yet in starting the mine again considerable repairing was found necessary. The machinery consists of a Woodruff & Beach engine 18″ x 36″, working a plunger pump 18″ barrel, by 6 feet stroke, connected by a rod 8″ x 10″, 137′ long, forcing water through a 16″ pipe, a perpendicular height 137′. It makes during four months of the year from 4 to 6 strokes per minute, the balance of the year from 6 to 10, and often as high as 12 strokes during heavy rains. The capacity of the pump, according to its area, is 80 gallons per stroke; we found, however, by actual measurement in a number of tests that we got but from 72 to 74 gallons. It raises, therefore, from 288 to 432 gallons per minute during the dry season, and from 432 to 720 during the spring and fall months.

In 1875, and part of 1876, the pumping was done by a Worthington duplex pump, the steam being carried through a pipe 200 feet long, causing a heavy percentage for fuel in these years.

The machinery for raising and washing the ore consists of two Reynolds's patent 5-foot hoisting drums, and one Bradford, and one Newbould washer. They are driven by a Ryder engine 18″ x 36″, the steam being generated in four (two in set) 40′ x 36″ cylinder boilers.

In moving dirt we labor under the disadvantage of being obliged to move an old dump, 25 feet high, deposited by our predecessors, who, to save expense in hauling, dumped the dirt but a short distance from where it was taken.

We have endeavored not to commit the same error, and now haul it in cars from 1200 to 1500 feet, and dump it in a swamp, hoping that in getting rid of the dirt we shall also lessen the water in our mine. It may, perhaps, be unnecessary for me to add, that we are also trying to reduce the outlay for fuel for steam generation.

NOTES UPON THE DRAINAGE OF A FLOODED ORE-PIT AT PINE GROVE FURNACE, PA.

BY JOHN BIRKINBINE, PHILADELPHIA.

(Read at the Philadelphia Meeting, February, 1878.)

In a former paper* attention was directed to the various forms of pumping machines employed for permanent work in mining and metallurgical processes. The following is simply a collection of memoranda of work done of a temporary character, and is presented by way of comparison with other work of similar nature.

In close proximity to the charcoal furnace at Pine Grove, Cumberland County, Pa., is a large deposit of superior hematite iron ore, which has been worked for a number of years, and from which many thousand tons of ore have been taken by open pit workings.

In July, 1874, the furnace was blown out and operations at the bank suspended, the machinery for draining being removed except a plunger pump, 18 inches in diameter and 66 inches stroke, operated by a steam-engine by means of rods.

The pit was allowed to fill with water, and no steps towards its reclamation were taken until November, 1877. At that time the pit was a pond of water at the base of the mountain, having an area of about four acres and a depth of seventy feet.

As the pumps, rods, etc., had been submerged for over three years, and partially buried by the mud washed down from the banks, and as it was determined to change the location of the pump for future operations and drive it by water-power, a temporary pumping apparatus was determined upon for reclaiming the pit and keeping it drained until the permanent arrangements could be completed.

By opening an old adit about 10 feet of the water was removed, and the area decreased to three acres. The inflow of springs was found to be 250 gallons per minute, and the amount of water contained in the pit was computed to be 45,000,000 gallons. As the inflow would undoubtedly increase while the water sank in the pit, provision was made for removing at least 60,000,000 gallons, at the rate of 1,500,000 to 2,000,000 gallons per day.

The company determined to employ a Heald and Cisco centrifugal pump driven by an oscillating engine by means of a belt. Steam was supplied by four plain cylinder boilers, each 36 inches diameter

---

* Transactions of the American Institute of Mining Engineers, vol. v. p. 455.

and 36 feet long, and was conveyed to the engine through 125 to 200 feet of 2½-inch tubing, and 50 feet of 2½-inch steam hose. The discharged water from the pump was conveyed to the surface of the ground by a 7-inch canvas hose from 90 to 125 feet long, emptying into a pool provided with a weir. An account of coal consumed each 12 hours, speed of pump, height of water on weir, pressure of steam at boilers, and inches of water removed, was carefully kept.

The work of draining the mine was commenced November 28th, 1877, and bottom was reached January 14th, 1878, a period of 46½ days. Of this time 5 Sundays should be deducted, as the pump was not running on the Sabbath, until the inflow was so increased as to cause serious detention. There were also 86 hours lost by stoppages to make connections, repair hose, etc.

The actual working time of the pump was 37⅞ days, during which 62,000,000 gallons were discharged.

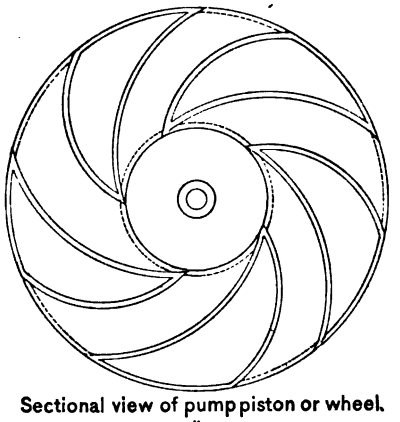

Sectional view of pump piston or wheel.
Scale. 1″ to 1 ft.

The stoppages were caused entirely in adding additional lengths to steam pipe and discharge hose, and by repairs to the latter, which was rapidly destroyed by the grit in the water; 7 per cent. of the running time was lost by these stoppages.

The machinery consisted of an oscillating steam-engine; steam-cylinder 10 inches in diameter, stroke 16 inches, driving a band-wheel 6 feet in diameter, and a centrifugal pump having a revolving piston secured upon a horizontal shaft, upon which was placed a 15-inch pulley.

The pump piston was 24 inches in diameter, had five hollow arms, each having openings of 8 inches in the central chamber and other

openings, $2\frac{3}{4}$ x $2\frac{1}{2}$ inches at the periphery (see figure). The action of the pump was to draw the water through a short suction pipe, 7 inches in diameter, into the central chamber, and project it from the outward end of the curved arms into the shell of the pump, and thence through a 6-inch discharge pipe to the canvas hose.

The engine and pump, with band-wheel, belt, etc., weighed 6000 pounds, and was placed upon a raft so as to follow the water as it sank in the pit.

The following table is a résumé of data collected and averaged. It exhibits the operation of the pump under various circumstances.

A	B	C	D	E	F	G
Lift in feet.	Pressure of steam at boilers, in pounds.	Coal consumed in 24 hours.	Actual revolutions of pump per minute.	Theoretical revolutions in pump per minute.	Gallons of water discharged per minute.	Duty in million foot-pounds.
15	55	5100	400	450	1200	4.23
25	60	4700	500	520	1200	8.
35	62	5200	525	580	1200	9.7
45	65	5100	575	630	1300	13.76
55	70	4900	575	690	1100	14.8
65	70	5100	575	730	1000	15.3
Average, ...						10.

NOTE.—The velocity of the periphery of the pump piston or wheel at 400 revolutions is 2500 feet per minute, at 575 revolutions 3600 feet per minute, and at 730 revolutions 4600 feet per minute.

The figures in column A show the lift from the surface of the water to the top of discharge hose.

Columns B, C, D, and F are averaged.

Column E is the speed which the pump should attain calculated upon the velocity of falling bodies; that is, the velocity of the periphery of the rotary piston should be equivalent to that required by a body falling $1\frac{1}{2}$ times the height of lift, the allowance of fifty per cent. being for friction, etc.

Column G shows the duty in million pounds raised one foot high by the consumption of 100 lbs. of anthracite pea coal, without any allowances, the quantity of coal consumed, water pumped, and height of lift being only considered.

The decrease in the coal consumed at 15 and 25 feet lift was owing to the protection of the steam pipe. As there was considerable condensation in the long steam connection, and leakage in the canvas hose, a fair allowance would place the average duty at, say, 15 million foot pounds, and the maximum duty between 20 and 25 millions.

By comparing columns D, E, and G it will be noticed that as the actual speed varied from the theoretical speed the duty increased. This may partially be explained by assuming that the allowance for fifty per cent., as above, is excessive, but it is undoubtedly owing to the fact that the leakage at low velocities is comparatively greater than in high velocities, that is, the leakage was not in proportion to the height lifted. Had it been possible to attain greater speed the duty would have undoubtedly been increased.

By the time bottom was reached the canvas hose gave so much trouble that it was abandoned and 8-inch wrought iron tubing substituted. The above memoranda were all taken, however, while the canvas hose was in use.

152 South Fourth Street, Philadelphia.

THE FIRE-CLAYS AND ASSOCIATED PLASTIC CLAYS, KAOLINS, FELDSPARS, *AND FIRE-SANDS OF NEW JERSEY.*

THEIR GEOGRAPHICAL DISTRIBUTION AND GEOLOGICAL OCCURRENCE.

From the work of the Geological Survey of New Jersey.

BY PROFESSOR J. C. SMOCK, ASSISTANT GEOLOGIST, NEW BRUNSWICK, N. J.

(Read at the Philadelphia Meeting, February, 1878.)

THE fire-clays of New Jersey belong in two geological ages, the cretaceous and quaternary, or post-tertiary. Three very small deposits of plastic clays have been discovered within the limits of the Archæan rocks. These are not refractory and of little importance, excepting in a geological consideration. They have resulted from a decomposition of the feldspars of the rock *in situ*, and they have been classified as inferior kaolins.

All of the fire-clays, fire-sands, and the so-called *kaolins** and *feldspars* are sedimentary formations. They have come from the decomposition of crystalline, feldspathic rocks. The source of this vast amount of material was probably a continental area, or belt of land, southeast of our present Atlantic coast-line. The isolated, granitic outcrops at Jersey City and on Staten Island appear to belong to a submerged and covered Archæan formation, which was once a continuous belt from New York to Trenton, and thence southwestward.

The several outcrops and localities, where these strata of fire-clays and other refractory materials occur, are grouped geographically in three districts of the State. The most important of these is in Middlesex County, east of New Brunswick, and extending to the Staten Island Sound and Raritan Bay. Its northern limit is a line parallel to the Pennsylvania Railroad, from New Brunswick to Rahway, and about two miles south of it. The Chesquake Creek forms the south boundary. This district has an area of sixty-eight square miles. It has been very carefully surveyed and represented upon one of the maps† of the geological survey, on a scale of $\frac{1}{2\,1\,\frac{1}{2}\,0}$th, or three inches to a mile. The well-known Woodbridge and Amboy clays, *kaolins*, and fire-sands come from this district.

The second district is geologically one with that above described. It is the extension of the latter across the State and along the Delaware River, from Trenton and Bordentown, southwest to Salem County, where it passes out of the State, and thence crosses the river and appears in Delaware. The Trenton, Florence, Pensauken Creek clays, etc., are in it. The third district, or (more properly speaking) group, includes all the more recent clay deposits of that part of the State which is south and southeast of the green-sand marl belt. The clays at Conrad, in Gloucester County, and those of Wheatland and the Union Clay Works in Ocean County, are the principal localities.

As above stated, the first, or Middlesex County clay district, is the most important, and it produces an aggregate many times larger than the sum total of all the rest of the State, as well as materials of superior quality and of more value. This district is bounded on the northwest by the Triassic shales and sandstones, and the beds of clay overlie these. The glauconitic, clayey marls bound this district

* These terms have been greatly perverted by local usage in New Jersey. By *kaolin* is understood a micaceous sand; by *feldspar*, a mixture of round grains of quartz, and sand, and fire-clay.

† See report on the clays of Woodbridge, etc., Trenton, 1878.

on the southeast, and the strata of marl are seen upon the top of the clay series. Between these geological limits the following beds are recognized as distinct and marked by characteristic features. They are, beginning at the top:

Dark-colored clay (with beds of lignite),	50	feet.
Sandy clay with sand in alternate layers,	40	"
Stoneware clay bed,	30	"
Sand and sandy clay (with lignite near the bottom),	50	"
South Amboy fire-clay bed,	20	"
Sandy clay (generally red or yellow),	3	"
Sand and *kaolin*,	10	"
Feldspar bed,	5	"
Micaceous sand bed,	20	"
Laminated clay and sand,	30	"
Pipe-clay (*top white clay*),	10	"
Sandy clay, including leaf bed,	5	"
Woodbridge fire-clay bed,	20	"
Fire-sand bed,	15	"
Raritan clay beds—Fire-clay,	15	"
" " Sandy clay,	4	"
" " Potters' clay,	20	"
	347	

The dip of this clay formation corresponds in direction to that of the green-sand marl beds on the southeast. An interesting feature of this dip is the diminishing rate in going from the older to the newer, or from the northwest to the southeast. Thus, in the Raritan clay bed it is 60 feet per mile; in the Woodbridge and South Amboy fire-clay beds, 51–48 feet; and in the Stoneware clay bed, only 30 feet, or the same as that of the marl beds above it. As is well known, the Triassic shales dip towards the northwest, and at much higher angle than that of these clay beds. The latter are seen lying unconformably upon the former.

Nearly all of these strata, or members of this formation, contain materials of more or less value in the arts, and especially so in the manufacture of fire-bricks and furnace-linings of all kinds, gas-house retorts, sewer and drain pipes, various ceramic products, and pottery in general. While there is much variation in the character of the materials found in any one of these, there are general features which are characteristic, and enable the miner to recognize it, and then determine its prospective value.

The early recognition of these distinguishing features is very important to the explorer and miner. Some of these, with descriptions of localities, are here given, following the order of the geo-

logical column, or series, as above, but beginning with the lowest member, the

Raritan Potter's Clay Bed.—This bed reposes directly upon the red shale and sandstone of the Triassic age. It has been opened at comparatively few points, and at none of them has there been much work done in digging or mining the clay. Its more important localities are the pits in the vicinity of Piscataway and Bonhamtown. The clay of this bed lacks that degree of homogeneity so characteristic of the higher fire-clay beds. It is very frequently laminated in structure, and appears to be a mixture of materials from different sources and of somewhat unlike characters. Much of it is, however, very white, almost free from gritty particles, and resembles some of the finest of the Woodbridge clays. But it does not *stand* in the fire, and cannot be considered a fire-clay, although there are thin sections of it quite refractory. Its composition is shown in the following analyses:

ANALYSIS.

	1.	2.
Silicic acid (combined),	45.61	38.20
Alumina and Titanic acid,	39 04	35.09
Water (combined),	10.10	12.10
Potash,	2.26	2.44
Soda,	0.25	0.21
Lime,	——	traces
Magnesia,	——	0.21
Ferric oxide,	1.10	1.89
Sand (quartz),	0.71	8.60
Total,	99.87	98.74

Separated from this clay by a thin bed of lignitic, sandy clay, there follows the Raritan fire-clay bed. This is marked by a drab color, and more sandy texture. It has been recognized by its elevation and these marks in Dixon's pits at Woodbridge, and in several small pits near Bonhamtown. The clay of this bed is more dense, and corresponds to some of the foreign glass-pot clays. It has been tried for crucibles for steelmakers and for glass pots, but not so fully as to establish a character for it. It is a good fire-clay for brick-making. Analysis shows its composition to be as follows:

ANALYSIS.

Silicic acid,	81.82
Alumina,	27.13
Water (combined),	9.63
Potash,	traces
Soda,	traces
Lime,	traces
Magnesia,	0.08
Ferric oxide,	1.26
Titanic acid,	1.93
Sand (quartz),	29.00
Total,	100.35

Its specific gravity is 1.994–2.047. It will be observed that this is not fat or aluminous, as the Raritan potter's clay-bed clay. This bed appears destined to furnish much more clay than it now does, and probably for wider uses than some of the other clays of this district. It does not now appear in the market.

The next bed is a fire-sand, and consists almost exclusively of sharp, angular grains of white quartz-sand. This is sometimes discolored by iron oxide stains, and occasionally it contains a small percentage of white clay or sandy earths. This bed yields nearly all the fire-sand which is dug in the district.

Going up in the series, the next, the Woodbridge fire-clay bed, is one of the most important of the whole. The fire-clays dug about Woodbridge, and in the several banks along the north shore of the Raritan River, come from this part of the clay formation. There are a great many separate pits owned and worked by many individual proprietors and clay-diggers. These are best seen by a reference to the map.

This bed is generally quite sandy, both at the top and at the bottom, and sometimes this gradation is so gentle that it is impossible to define the limits of clay and sand. The clay is most generally bluish-white, excepting where it has been faded by long exposure to atmospheric agencies. But in nearly all pits this shade is diversified, and the clay appears red or mottled, red and white, by the presence of ferric oxide, which exists in it as a foreign or accidental constituent.

Pyrite is another occasional constituent, although rare in the *best* clay of the bed. It is more generally seen in the inferior and sandy portions. Lignite has also been seen, but it is not common in these fire-clay beds, although very abundant in some of the dark-colored

black clays that lie between these fire-clay members. The composition of the fire-clay of this bed does not materially differ from that of the South Amboy bed, and the following average of seven analyses of as many specimens, each representative of a locality, shows this composition:

ANALYSIS.

Silicic acid,	43 22
Alumina,	38.94
Water (combined),	13.71
Potash,	0.30
Soda,	0 17
Lime,	0.15
Magnesia,	0 11
Ferric oxide,	0 81
Titanic acid,	1.35
Sand (quartz),	1.81
Total,	100.07

The specific gravity of this clay is 1.705–1.814; the more sandy clays being a little heavier.

Above this bed there is a layer, known locally as *top-white*, or pipe-clay, which is fusible at a high heat, and which is sometimes classed with this fire-clay. It is distinguished by its darker color, more sandy character, and the higher percentage of potash, sometimes amounting to two per cent. The red clays of this bed, as also of the South Amboy bed, contain varying amounts of ferric oxide up to seven per cent. Such clays, known variously as red, spotted, and mottled, are not so refractory as the blue or white sorts. Generally they are more sandy, and also less uniform in texture. They are used in No. 2 firebrick sometimes, but more often in drain and sewer pipe, and in saggers and stove-linings. The best clays are put in the market as No. 1 fire-clay, or as *fine clay*. These are the rich, aluminous clays represented by the composition above given. The more sandy portions are nearly as good fire material, in some places quite as good, as the more *fat* varieties, but they are not ranked so high, and are classed with the No. 2 grades. Wherever the bed is impregnated with pyrite, that part of it is dug by itself and sold separately (if it be not sandy) for alum-making.

Selected lots, which are particularly free from any oxide of iron or other foreign constituents, are also separated for white ware. This *ware clay* is softer, more friable, and has a more decided conchoidal fracture than the firebrick clay. A *paper clay*, used in glazing wall paper, is got in some of the pits. This needs to be very fine and free

from grit. Sometimes it is prepared by washing the clay, by which means the sand and pyrite and other constituents foreign to the clay are removed. All these grades of ware, paper, firebrick, retort, and alum clays, belong geologically in these beds, being found at nearly all of the pits in both this and the South Amboy bed. They are variations only, and are found going vertically, not horizontally, through each of them, although not always in the same order of succession. Commonly the best clay is in the middle horizon, grading off, towards top and bottom, into varieties of less value.

These clays constitute the great mass of all the fire-clay exported from the State, and they supply most of the firebrick material for the works of the Atlantic slope.

The laminated clay and sand forms the most of the dark-colored red brick material which is dug in such large quantities along the tidal waters of this district. It furnishes a very superior brick earth for making a strong and durable building brick. The yards at Washington, and along the South and Raritan Rivers, all use these clays and sands.

Passing up the columnar section, the next important member of the series is called the *feldspar bed.* This is a misnomer, but the wide and general use of the term compels its retention in this place. It is properly a mixture of white clay with about an equal weight of white quartz sand and grains, which are but very slightly rounded. It resembles somewhat some of the coarser-grained kaolins, and, if it were lying upon a granitic rock, one would suppose it to be a product of decomposition *in place.* But here it is lying between beds of micaceous quartz sand. The chemical composition of this anomalous material is as follows:

ANALYSIS (AVERAGE OF THREE).

Silicic acid,	16.79
Alumina,	17.52
Water (combined),	5.17
Potash,	0.14
Soda,	0.21
Lime,	—
Magnesia,	0.25
Ferric oxide,	0.65
Titanic acid,	0.90
Sand (quartz),	58.15
Total,	99.78

In some places it shows iron-oxide stains, otherwise it is very uniform in its physical characters. As a bed it is quite uneven, and wants the persistence seen in the clay beds of this formation. It is divided into three grades, Nos. 1, 2, and 3, according to quality. The latter approaches a clayey fire-sand in appearance. Its use is in tempering clays in mixtures for firebrick; and by some manufacturers it is preferred to fire-sand, and also to the so-called *kaolin*. The working localities of this *feldspar* are southwest of Woodbridge village, the pits being on the higher ground between that place and Perth Amboy. One or two localities are known south of the Raritan, but they are of no account practically.

Overlying this bed is the sand and *kaolin* bed. Here again there is a wrongly used term, for this is simply a rather fine white quartz sand, containing a small amount of white mica, in very small scales, but still sufficient to give to the mass a very decided micaceous aspect. Its chemical composition is somewhat varying, according as the bed is more or less sandy. The percentage of quartz ranges from 77 to 92 per cent. This *kaolin* is found at the bottom of the South Amboy fire-clay bed, after the pits have penetrated through the clays. But on account of the water in it, in these pits, it is not often dug in them. The best known localities are near Perth Amboy, northwest and north of the town; in fact it appears in the street and railroad cuttings in the place. Another large pit is at Washington, S. R. There are other localities, not, however, in this horizon, that furnish sands more or less micaceous, and resembling somewhat this *kaolin*, but they are not the same, but of local or surface deposits. The *kaolin* is used as fire-sand in firebrick and and other refractory products, as a tempering material. It is not quite as refractory as the best fire-sand, or the No. 1 *feldspar*. A considerable amount of it is used, however, but mainly in inferior grades of brick, etc.

The South Amboy fire-clay bed is opened in several very large pits or excavations on the south side of the Raritan River. The pits of E. F. & J. M. Roberts, George Such, J. K. Brick estate, Whitehead Bros., and Sayre & Fisher, are in it, and they sell annually many thousands of tons of superior fire-clay. North of the Raritan this bed is recognized in the pits of J. Manning, E. F. Roberts, and De Bow, on the high ground, two miles west of Perth Amboy.

This fire-clay is much like that of the Woodbridge bed, and the descriptions of the latter given above may be applied to this clay

also. Some of the firebrick makers speak of differences, but these are local and not sufficient to characterize one rather than the other. There are, however, some features that mark this as distinct geologically, and as a separate bed.

Between this fire-clay and the stoneware clay bed there is fifty feet of dark-colored sandy clay, containing lignite, and resembling closely the thick bed which intervenes between the two fire-clays, and which is worked for building brick.

The stoneware clay is one of the most characteristic clays of the formation. It has just the nice proportions of sand and of clay, containing ferric oxide and alkalies to vitrify and make a superior stoneware. It is mixed in some portions of the bed with more sand; in others there are the same discolored stains as have been mentioned as occurring in the fire-clays. These render some of it unfit for any valuable uses. Pyrite and lignite are found, but only sparingly towards the top or the bottom, but not in the best of the bed. The average of three analyses of typical specimens of this clay is as follows:

ANALYSIS.

Silicic acid,	28.21
Alumina,	19.88
Water (combined),	6.02
Potash,	1.66
Soda,	0.33
Lime,	0.11
Magnesia,	0.37
Ferric oxide,	1.51
Titanic acid,	1.02
Sand (quartz),	41.30
Total,	100.41

Its specific gravity is 1.971–2.151.

This clay is the best in our country for making stoneware, and the most of that kind of ware manufactured here is made of this clay.

It is shipped to all points along the coast from Maine to Texas. The most noted banks in the district are those of Morgan's near South Amboy, and, O. Ernst, N. Furman, W. C. Perrine, and others between that place and the Chesquake Creek.

The strata above the stoneware clay bed are not worked excepting for red-brick material. In the upper one there is much lignite, and in places attempts have been made to mine this fuel, but, in consequence of the large amount of pyrite scattered through it, without success.

In the southwestern continuation of this clay formation, as seen in the separate outcrops at intervals along the Delaware River, the stratification is not so easily defined or traceable. There is a close resemblance in general features to the district along the Raritan, but some of the members there recognized, do not appear, or have not been identified here along the Delaware. At Trenton a little clay has been dug which resembles a true kaolin, and appears as if it were upon, if not very close to, the original rock that furnished its material.

A few miles east of Trenton this formation is exposed at a few small pits where it yields a common *sagger* clay. In the river bank south of that city, a similar clay has been found at several points and dug for such use. Further down the river, at Florence Heights, a considerable amount of sandy, white clay and some *kaolin* (micaceous sand) are got out of the bluff. This clay is of inferior character as a fire-clay, although sold as No. 2 clay. It also goes to foundries, some of it to potteries for saggers, and some for pipe. At Kinkora the clay marls appear in contact and upon the dark-colored lignite clay. And this clay of Florence is quite near the top of the formation. It may be the equivalent of the stoneware clay bed on the east side of the State. The best of this Florence clay has the following composition:

ANALYSIS.

Silicic acid,	26.80
Alumina,*	21.24
Water (combined),	5.80
Potash,	2.50
Soda,	0.21
Lime,	0.25
Magnesia,	0.61
Ferric oxide,	1.99
Sand (quartz),	40 82
Total,	100.22

At Bridgeborough, in Burlington County, about ten miles north of Camden, a little sandy clay has been dug for terra-cotta works and some iron foundries.

The most extensively worked banks along the Delaware River are five miles northeast of Camden, in the bluffs on the south of the Pensauken Creek, near its mouth. The bank here shows some red

* Including titanic acid (not determined).

and white clays covered by fine white quartz sand (*kaolin*), and underlaid by a fire-sand. The beds all dip gently towards the southeast. The clay ranges from eight to twenty feet in thickness. Its composition is given by the accompanying analysis.

ANALYSIS.

Silicic acid,	17.57
Alumina,*	18.20
Water (combined),	5.50
Potash,	0.76
Soda,	—
Lime,	0.11
Magnesia,	—
Ferric oxide,	1.09
Sand (quartz),	57 08
Total,	100 31

These figures show that the clay is very sandy, but the percentage of fluxing elements is smaller, indicating a refractory clay. A large amount is sold annually to firebrick, terra-cotta, and drain-pipe works, and for other uses. Some of it is used for zinc furnace retorts and muffles. Large quantities of fire-sand and *kaolin* are also sold from this bank, and some of these are said to be very superior fire material.

Proceeding southwest, clays crop out at Red Bank near Gloucester City, and in Gloucester County at Billingsport and Bridgeport. But these are but lightly worked, and they are all sandy clays and not very valuable. They answer for drain pipe, for saggers, and for foundry use.

In the southeastern part of the State clay has been dug at Conrad, Camden County. Some of it has been made into pipe, terra-cotta, and it is said into firebrick. It is quite sandy, and the best of it is streaked with yellow earths.

The only other localities worthy of mention are the deposit at the Union Clay Works near Woodmansie, in Ocean County, and the Townsend bed, or pits, near Wheatland Station in the same county. But these have not been used except to make drain pipe at works located near the pits.

The geological relation of these pits in the southeastern part of the State are not certain. They are comparatively recent, and are probably of limited extent and separate deposits. They can never

* Including titanic acid.

be of great importance so long as the rich beds of the plastic clay formation are not exhausted.

DISCUSSION.—DR. HUNT, in speaking of the cretaceous clays of New Jersey and other regions along the seaboard, explained that they have their origin in the decay of the crystalline rocks of the Atlantic belt. He mentioned that these rocks, where they are feldspathic, are in many parts found in a state of disintegration, from the change of the feldspar into kaolin, and instanced the Laurentian gneiss of the South Mountain at Seisholtzville, and near Allentown, in Pennsylvania; while in the vicinity of Philadelphia, and elsewhere, both southward and northward, the Montalban gneisses are similarly kaolinized. A striking illustration of this is seen in the gneisses of the Hoosic tunnel, in Western Massachusetts, described by him in the *Transactions of the Institute of Mining Engineers*, in 1874 (vol. iii, page 187). Farther examples of this are met with in the gneissic rocks of Wisconsin, and in the petrosilex-porphyries of Huronian age, which rise through the Cambrian sandstones of Southeastern Missouri, "protruding, but not intruded."

The action of water upon such decayed rocks separates the kaolin from the crystalline quartz. In some cases, however, mechanical agencies break up the feldspathic rocks, before their decay, as is seen in the feldspathic sandstones (arkose) from the Mesozoic of our Atlantic slope, noticed by Prof. Wurtz. Specimens of these have just been shown to the Institute, by Mr. Heinrich, from the Mesozoic of Virginia, which consist of the *débris* of undecayed quartzo-feldspathic rocks, and it was suggested that the aggregates of clay and quartz, described by Prof. Smock as occurring in the cretaceous strata of New Jersey, might have come from the subsequent decay, in place, of beds of similar feldspathic sandstones.

Allusion was farther made to the decay of the crystalline schists of the so-called Primal and Auroral series, in the great Appalachian valley. These schists which, with their associated quartzites and limestones, belong to the Lower Taconic (or true Taconic) of Emmons, which Dr. Hunt has elsewhere designated Taconian, have, in parts, considerable resemblance to certain schists of the Huronian, with which he was at first, in 1874, disposed to confound them. (*Transactions*, vol. iii, p. 420.) Similarly, Prof. Kerr, in his report on the geology of North Carolina, in 1875, described the whole of the Taconian rocks as Huronian, and thus represented the

Huronian as overlying unconformably the Montalban, which, itself, is younger than the true Huronian. The Taconian age of the limonite-bearing schists of the Appalachian valley was pointed out by the speaker in his paper on the Cornwall iron-mine, in February, 1876. (*Transactions*, vol. iv, p. 319.)

The decay of these Taconian schists has, as is well known, given rise to clays, which often inclose the limonite ores of the region, and from the peculiar composition of the schists, are generally free from quartz grains. The clays thus formed, are seen, in highly inclined and contorted strata, in many parts in the Great Valley to the west of the Blue Ridge, and, as we have evidence of the former existence of a continuous belt of such rocks along the eastern base of the Blue Ridge, they may very well have been the source of much of the cretaceous clay.

The speaker called attention to the existence of areas of undecayed Taconian strata in North Carolina and Virginia, as well as in New England, to the east of the Blue Ridge. It is, however, often impossible to trace these Mesozoic (and Cenozoic) clays to the unchanged crystalline rocks of their vicinity, since they may have been derived from formations which, by decay and erosion, have long since been removed. He conceived that the Huronian and Montalban rocks, which overlie the Laurentian to a great extent, both northeast of the Hudson, and south of the Susquehanna, had probably at one time covered the now exposed Laurentian axis of the South Mountain between these two points. Portions of all these new formations, including the Huronian, Montalban, and Taconian, are, however, still to be found on Manhattan and Staten Islands.

PROF. SMOCK referred to the presence of titanium in all of the clays of Middlesex County, as well as in the associated strata of *feldspar* and *fire-sand*, as a possible clew to the origin of these materials. This element is very widely distributed, particularly in the gneissic or Archæan rocks of the highlands of New Jersey, and it occurs in some of the magnetic iron ores of that district. The Church Mine ore is remarkable for the large percentage of titanium, but this is an exception among our New Jersey magnetites. They do not, as a rule, contain weighable quantities of this element. Some of the gneisses of the highlands have been examined with reference to this point, and have been found to be free from titanium. Many more examinations ought to be made before we assert positively that it is generally wanting in these rocks and their associated ores. Of the clays analyzed, a very few do not contain any titanium, as, for ex-

ample, the kaolin clay of Trucks & Parker, Hokessin, Delaware. The amount of titanic acid is remarkably constant. Its variations are not as wide as those of any of the other constituents, almost leading us to believe that it is one of the essential components of the mass. These facts, with the existence of titanium in the crumbling, partially decomposed gneiss near Trenton, appear to show that the materials of this clay formation were not derived from the Archæan rocks of the highlands on the north, but from the degradation of the southern belt, now covered across New Jersey by the more recent shales and sandstones of the Triassic age and these Cretaceous clays and associated beds. The uncovered outcrops of this southern belt are seen near Trenton and on Staten Island.

PROF. FRAZER said: In the clays and clay slates of York, Adams, and Lancaster counties, Pa., titanic oxide is an almost invariable ingredient, as the subjoined extracts from communications by Mr. A. S. McCreath and Prof. F. A. Genth will show.

The former says (under date of October 15th, and speaking of the Peach Bottom slate): . . . "Permit me to call your attention to the comparatively large percentage of titanic acid in this slate. I may state that I was induced to look for it from the fact that I have invariably found this element in the clays from this slate, and also because none of the published analyses of our clays show its presence." . . .

The analysis of the slate, which was a fine specimen of the celebrated Peach Bottom roofing slate from the Lancaster County quarry, is here subjoined:

	Per cent.
Silicic oxide,	55.880
Alumina,	21.849
Ferrous oxide,	9.033
Manganous oxide,	0.586
Cobaltous oxide,	trace
Titanic oxide (TiO_2),	1.270
Lime,	0.155
Magnesia,	1.495
Soda,	0.460
Potash,	3.640
Carbon,*	1.974
Water,	3.385
Iron bisulphide,	0.051
Sulphuric acid (SO_3),	0.022
	99.800

* Average of three determinations.

The following extract from a letter from Prof. F. A. Genth, of August 3d, 1877, refers to the result of an examination of the solid and liquid contents of certain limonite bombs, which were selected and sent from the Chestnut Hill mines.

These bombs contained generally water, together with a fine sediment, which might be called mica dust, and which was the product of the weathering of the adjacent hydro-micas and their infiltrations into the bombs.

It will be borne in mind, in connection with these results, that, according to the belief of our honored President and many other eminent geologists (a belief which all that I myself have observed of the condition and structure of these clays tends to substantiate), the greater part of them have been formed by the weathering in place of these hydro-micaceous rocks by the gradual solution and washing out of all their constituents except aluminum silicate, or clay. If this hypothesis be correct, we should at least not expect to find any constituent in the residue of the long leaching which was not in the original schists, although naturally the converse need not be true.

If, then, titanic oxide was found in the clays, and not in the slates, the argument against the identity of origin of the two would be strong. That the reverse is true is fully attested by the foregoing results of Mr. McCreath, and by the analysis by Dr. Genth of the finely divided debris of these slates. The extract referred to reads: . . . . "The water contains 0.000116 per cent. of solid matter, containing K_2O and a trace of Na_2O. The solid constituents contained principally damourite, quartz, limonite, titanic acid, and carbon. The analysis gave:

	Per cent.
SiO_2,	47.42
TiO_2,	2.00
Fe_2O_3,	18.38
Al_2O_3,	20.57
MnO,	0.07
CoO,	0.10
MgO,	2.33
CaO,	0.12
Na_2O,	0.02
K_2O,	6.06
H_2O,	6.52
Carbon,	1.99
Sum,	100.58

"You will see from this analysis, if we take the 6.06 K_2O, and

calculate from it the constituents of damourite, nearly the whole of the alumina is taken up.

K_2O, ...	6.06
Al_2O_3, ...	19.83
SiO_2, ...	23.16
H_2O, ...	2.82
	51.37 of damourite."

MANGANESE PIG.

BY DR. R. W. RAYMOND, NEW YORK CITY.

(Read at the Philadelphia Meeting, February, 1878.)

THE manufacture of ferromanganese in the blast furnace having been the subject of considerable attention in the Institute, I beg to put on record a contribution to the discussion from a quarter hitherto not directly represented, namely, the St. Louis furnaces, near Marseilles in France, belonging to a company of which M. Jordan, a member of the Institute, is Managing Director. These furnaces commenced in 1862 to manufacture specular pig (*fontes à facettes*) containing from three to six per cent. of manganese. In 1864 the regular production of spiegeleisen (*fontes miroitantes*), containing seven to ten per cent. of manganese, was inaugurated. At that time the Rhine was the only locality of this manufacture, and the Bessemer works of England and France obtained from Germany all their spiegel.

From 1864 to the present time, the St. Louis furnaces have been advancing steadily the percentage of manganese in their product. From ferromanganese of thirty per cent. they had arrived, about two years ago, at a product containing seventy to seventy-five per cent., and for some time past they have been turning out what, as M. Jordan remarks, may fairly be termed *fonte de manganese*, or manganese pig, instead of iron, since the percentage of iron it contains is not more than 8.5, while the percentage of manganese is 85, or ten times as great. This very high grade material has a peculiar appearance, entirely different from that of ordinary cast iron or spiegel. It is granular, and steely gray in color. The following analyses, communicated to the *Société des Ingenieurs Civils*, by M. Jordan, show the composition of various products of the St. Louis furnaces:

	Lamellar pig.	Spiegeleisen. A.	Spiegeleisen. B.	Ferromanganese. A.	Ferromanganese. B.	Gray steely pig.
Iron, ...	90.070	*83.958	*75.562	*54.436	8.550	*89.029
Manganese, .	4.640	10.930	18 500	39.900	84.960	3.310
Total carbon, .	3.627	4.410	5.750	5.450	5.700	4.900
Silicon, . . .	1.3?5	0.690	0.168	0.186	0.660	2.740
Sulphur, . .	0.048	0.010	0.005	0.008	0.035	0.006
Phosphorus, .	traces	0.002	0.015	0.020	0.005	0.015
	99.710	100.000	100.000	100.000	99.910	100.000

These analyses, at least in the absence of details as to the method of manufacture, do not reveal any law as to the percentage of other ingredients besides manganese and iron. The total carbon is practically the same for 18 per cent. manganese as for 85 per cent. This might perhaps be inferred from the chemically similar behavior of manganese and iron. The increase in the proportion of silicon in the B ferromanganese might be ascribed to the very high temperature of reduction and fusion; but spiegeleisen A, containing only 10.9 per cent. of manganese, is even more silicious, though the intervening products are notably less so. The variations in phosphorus are scarcely of practical importance, since the amount of high-grade spiegel or ferromanganese added in the converter or open hearth is not large enough to contribute from material so nearly free from phosphorus as this any appreciable amount to the steel. In fact all these analyses show less phosphorus than the metal bath before the addition of spiegel usually contains. Much higher proportions of phosphorus might easily be carried, and are carried by ferromanganese without sensible detriment.

M. Jordan says that the reduction of oxide of manganese is difficult, requiring very high temperature and a considerable consumption of fuel. A furnace producing 50 to 60 tons daily of the "steely gray pig" referred to in the above table, could produce of the manganese pig not more than 20 to 24 tons.

DISCUSSION.

Mr. HOLLEY said that while he could not then give the costs of the spiegels of various grades, he knew that in the Bessemer rail manufacture certainly those low in manganese were the cheapest, provided the steels were malleable with ordinary percentages of manganese. Some iron produced a steel which would crack in rolling unless a high percentage of manganese was present. One reason

* By difference.

why the low manganese spiegels are cheapest for ordinary rail steels is that the large amount of iron they contain is reproduced as steel with the slight loss due to melting, while the iron that forms the bath has to stand the loss of conversion also. Ferromanganese, rich in manganese, is necessarily used for soft steels in both the open hearth and in the converter. These steels, boiler-plate for instance, must be low in carbon. Adding low spiegel enough to give them the manganese that will make them malleable would give them too much carbon. One other thought occurs in this connection. Melting spiegels by the barbarous methods usually employed in our Bessemer works, oxidizes the manganese largely, and the richer they are in this substance, the greater its loss, as manganese is the most oxidizable of all the ingredients. We melt the spiegel in ordinary reverberatories or in cupolas which is less, but quite wasteful. Mr. Fritz has the best system of melting—a gas furnace—but even this oxidizes some two per cent. of the manganese in ordinary spiegel. At West Cumberland, England, a truly scientific arrangement is adopted—a cage containing the pre-heated spiegel, is suspended just over the mouth of the vessel. When the blowing is completed the spiegel is dropped out of the cage into the vessel, and while the vessel is turning down, it is thoroughly mixed with the bath. When the spiegel is thrown into the vessel after turning down, it gets entangled in the slag and is not likely to be thoroughly incorporated with the bath. This improvement ought to be generally adopted.

Mr. Fritz said that at Bethlehem ferromanganese was thrown into the vessel and so was not wasted by melting. When ordinary spiegel was used, this was not done, on account of the difficulty of pre-heating the larger quantity required, so as not to chill the bath.

NOTE UPON THE COST OF CONSTRUCTION OF THE CONVERTING WORKS OF THE EDGAR THOMSON STEEL COMPANY, OF PITTSBURGH, PA., 1873–75.

BY P. BARNES, PLAINFIELD, N. J.

(Read at the Philadelphia Meeting, February, 1878.)

SOME statements have already been made to the Institute in reference to the cost of other departments of the above-named works, and some details have been given in tabular form.*

For the purpose of the present paper it may be sufficient to say that this converting works is made up of three buildings, a cupola-house, an engine-house, and a converting-house.

The machinery and fixtures comprise two blowing-engines, two pressure-pumps, two five-ton converters, five hydraulic cranes, three pig-iron cupolas, four spiegel cupolas, two lifts for the cupolas, together with the usual arrangements of smaller parts.

Every effort was made in the construction to combine efficiency of operation with durability, and the general course of the operation of the works during two and a half years seems to warrant the belief that the large outlay has been fully justified.

In the accompanying tabular statement all items on vouchers less than ten dollars, and all freight items have been omitted.

---

* See Transactions of the Institute, iv, 105, v, 427; also, Engineering and Mining Journal, vol. xxi, 561, xxiii, p. 439, xxiv, 419.

Items.	ITEMS.	Buildings.	Blowing-engines.	Pressure-pumps.	Cupola blowing-engine.	Cupolas.	Converters.	Cranes.	Cupola lifts.	Floors.	Small machines.	Spiegel furnaces.	Melted iron lift.	Blast pipes.	Tools.
		1	2	3	4	5	6	7	8	9	10	11	12	13	14
1	Stone	$7,134	$267	$62	$424	$23	$591	$1,368	$97				$41		
2	Sand and cement	2,885	852		105	101	110	430		$66	$79				
3	Red brick	7,747	1,044		210		150	104		62					
4	Fire brick					1,614						1,151			
5	Bricklaying	1,623	920	31	172		32			84		161			
6	Lumber	4,652	23	29		20		10	283	369	84				111
7	Roofs	13,880													
8	Plate iron	807		265		484				1,837	104				122
9	Bar iron	1,070				28	711	218	295	443	73	32			296
10	Hardware	251	80	163	11	419	179	102	89	85	364	32			511
11	Sulphur and lead		68	31	16		20	82			8				
12	Paint and oil	188	10	212		10	213		24	29	18				
13	Castings	4,539	233	147		736	1,450	377	1,721	338	1,516			21	33
14	Chimneys						1,877								
15	Iron beams	484		50		301		129	89	2,841		27			
16	Shells (iron)					6,671						1,547			
17	Engines		36,515		5,075						2,025				
18	Converters						15,087								
19	Rotating fixtures						9,700								
20	Ladles					1,260		5,283							
21	Pumps			7,539											
22	Regulator			2,327											
23	Receiver		1,195	1,375											
24	Pipes					60			156			177		756	
25	Cranes							13,963							
26	Shafting										953				
27	Crushers										2,118				
28	Scales					750					790				
29	Teaming	3,081	132	11	20	117	339	154	15	37	10				
30	Skilled labor	8,430	1,017	789	93	1,114	2,975	1,128	901	2,190	249	338		199	61
31	Common labor	5,129	386	75		506	619	288	131	320	158	164		51	
	Totals	$61,900	$42,742	$13,106	$6,126	$14,234	$33,353	$23,636	$3,801	$8,701	$8,549	$3,629	$41	$1,027	$1,134

Total of accounts 1 to 14, as noted above, $221,979.

NOTE UPON THE "BLUE" PROCESS OF COPYING TRACINGS, ETC.

BY P. BARNES, PLAINFIELD, N. J.

(Read at the Philadelphia Meeting, February, 1878.)

IT may be of interest, and perhaps of importance, to the members of the Institute that specific mention should be made in detail of the great value of this method of copying or photographing all kinds of tracings.*

Several samples are laid upon the table which may serve as illustrations of the results obtained. Some of these show slight imperfections, depending upon the character of the tracing, and upon the length of the exposure to the light, but it may be clearly seen that even a faint copy would be quite available for actual use.

The process is believed to be of French origin, and has been used for many years. Special attention seems to have been directed to it recently, and its great value to engineers appears likely to be fully recognized.

The manipulations required are of the simplest possible kind, and are entirely within the skill and comprehension of any office boy who can be trusted to copy a letter in an ordinary press.

These particulars may be summarized somewhat thus:

1. Provide a flat board as large as the tracing which is to be copied.

2. Lay on this board two or three thicknesses of common blanket, or its equivalent, to give a slightly yielding backing for the paper.

3. Lay on the blanket the prepared paper with the sensitive side uppermost.

4. Lay on this paper the tracing, smoothing it out as perfectly as possible so as to insure a perfect contact with the paper.

5. Lay on the tracing a plate of clear glass, which should be heavy enough to press the tracing close down upon the paper. Ordinary plate-glass of $\frac{3}{8}''$ thickness is quite sufficient.

6. Expose the whole to a clear sunlight, by pushing it out on a shelf from an ordinary window, or in any other convenient way, for six to ten minutes. If a clear skylight only can be had, the exposure must be continued for thirty or forty-five minutes, and under a cloudy sky, sixty to ninety minutes may be needed.

* The introduction of this process into the United States is due principally to Mr. A. L. Holley, who first drew the attention of American engineers to its simplicity and convenience. Mention was also made of the process at the meeting of the Institute in New York, in February, 1877, by Mr. Ogden Haight.

7. Remove the prepared paper and drench it freely for one or two minutes in clean water, and hang it up by one corner to dry.

Any good hard paper may be employed (from even a leaf from a press copy-book up to Bristol board) which will bear the necessary wetting.

For the sensitizing solution take 1⅛ oz. citrate of iron and ammonia and 8 oz. clean water; and also, 1¼ oz. red prussiate of potash and 8 oz. clean water; dissolve these separately and mix them, keeping the solution in a yellow glass bottle, or carefully protected from the light.

The paper may be very conveniently coated with a sponge of four inches diameter, with one flat side. The paper may be gone over once with the sponge quite moist with the solution, and a second time with the sponge squeezed very dry. The sheet should then be laid away to dry in a dark place, as in a drawer, and must be shielded from the light until it is to be used. When dry the paper is of a full yellow or bronze color; after the exposure to the light the surface becomes a darker bronze, and the lines of the tracing appear as still darker on the surface. Upon washing the paper the characteristic blue tint appears, with the lines of the tracing in vivid contrast.

It will readily be seen that the process is strictly photographic, in the ordinary sense of the word—the tracing taking the place in the printing of the ordinary glass negative. Hence all details are closely reproduced, even to the texture or threads of the tracing-cloth.

A working drawing thus made furnishes its own background, and does not require to be placed over a white ground, as is often the case with a tracing. If desired the copy can be made upon common bond paper, which can be mounted upon a board in the usual way.

Inasmuch as such copies can be made from tracings only, it may be well to suggest, and urge, that drawings can be completed or nearly so in pencil upon paper in the usual way, and that all the inking can be done upon tracing-cloth laid upon the pencil-work. In this way the cost of the tracing (in the ordinary sense) can be wholly saved, and the single copy of the finished tracing can thus be made in the "blue" way to the best possible advantage.

It may safely be said that this method of copying can be employed if only one or two copies per week are needed of ordinarily complex drawings, with excellent results and with a very important saving of time and money.

A ready means of adding to or correcting the blue copies may be found in the use of a solution of carbonate of soda or potash, used with a pen or brush.

February 23d, 1878.

THE ECONOMY EFFECTED BY THE USE OF RED CHARCOAL.

BY B. FERNOW, BROOKLYN, N. Y., LATE MEMBER OF THE PRUSSIAN FOREST DEPARTMENT.

(Read at the Philadelphia Meeting, February, 1878.)

THE question of preserving the forests in this country is an important one, not only to trades using wood but to the whole nation, and though agitated for many years has not received that general consideration which its broad bearing demands.

Those who are interested in and working for reform in the treatment of American forests are looking to the government for help, suggesting the creation of a commission to study the conditions of forests at home and abroad, and hope that a sound system of managing the woodlands will be thereby inaugurated. This reform will cost time and money, all the more because the government can bring to bear upon private owners hardly any power but that of good example and encouragement.

There is, however, another aspect of the question to which I wish to draw your attention, namely; the more economical use of the valuable material which our forests offer, a more careful and exhaustive utilization of its constituents in all cases where wood or its products are applied.

The wasteful consumption of wood in the United States is in every way so enormous as to justify the statement that by merely adopting an economical husbandry in this particular the destruction of forests might be delayed for many years, while the neglect of this imperatively needed and immediately practicable reform deprives legislative remedies of much of their value. In this regard I wish to draw the attention of metallurgists, especially those who are interested in the manufacture of charcoal iron, to a more economical and profitable use of wood in iron manufacture.

For thousands of years of human history wood was the main, nay, the only material used for fuel. Mineral coal came into use only in the fourteenth century, and it is only recently that it has largely displaced its less carbonaceous predecessor as fuel.

The art of concentrating carbon in the form of charcoal for easier transportation and readier use in distant places was, according to Pliny, known to the ancients long before Christ, and was practiced in all countries, especially in connection with the iron manufacture.

Nevertheless, important as the material and extended as its use has been, hardly any progress has been made in developing the art of charcoal-making down to the present time, and the charcoal-burner of to-day is scarcely in advance of his predecessor of two thousand years in the method of treating wood to obtain a better and larger yield. Of course attempts have been made to bring the process to a more scientific basis, but all the improvements have not amounted to enough to give perfect control of the process to the burner or to secure a larger yield of empyreumatic products.

"Meiler" charring (or, as it is called in this country, burning in pits), with its dependence upon weather and good luck, its uncertainty of a long period of burning, and many other inconveniences, it is still claimed, gives the best results, and only reasons outside the process itself have led to the more general use of kilns, which are said to give a weaker charcoal and a smaller yield.

To economize in another direction, namely, by collecting the by-products lost during the process of meiler-charring, various contrivances have been proposed. Some of these are employed with good effect, though not without injury to the final product, the charcoal, which generally is rendered less valuable by such processes. In this country so far as I can ascertain no pains are ordinarily taken to utilize these by-products, though it would be easy to do so, since the use of kilns, which facilitates the collection of the by-products, is more common here than in the old countries. But, as above remarked, in operating for these by-products the main product, charcoal, is generally neglected and it is mostly of a weaker quality.

The general results obtained by the manufacturers who distil wood with the greatest precaution in closed vessels, and who have in view the utilization of all the products resulting from the operation, may be expressed for 100 parts of wood, thus:

Charcoal,	26 parts.
Pyroligneous acid and water,	30 "
Tar,	7 "
Carbonic acid and carbonic oxide, hydrocarbons and uncondensed water,	37 "
	100 "

If to these numbers be added the weight of wood necessary as fuel to effect the distillation, about 12½ parts, the results will agree well with what is arrived at in burning for charcoal.

These results agree pretty closely with those of theoretical calcu-

lation, by which it is found that to expel the oxygen and hydrogen contained in 112.5 parts of wood together with the moisture, which altogether amounts to about 67½ parts, about 4.50 parts of charcoal are required. But practically much of the carbon is carried away in the gases, so that 8½ to 9 parts of carbon are lost in the charring of the above-named quantity of wood. These figures show that no very considerable improvement towards producing a larger yield of carbon can be made upon the common method, which if carried on carefully yields from 25 to 27 per cent. of the weight of the original material.

To two Frenchmen, Sauvage and Berthier, is due the first essential step towards producing a better fuel in larger quantity by the process of charring. Although their discoveries were made just forty years ago, and have found acceptance in France, in Belgium, and in parts of Germany, it is strange that in this country the very name of the new product seems to be unknown to many users of charcoal. The material to which I allude is known under the name of red charcoal, *charbon roux* of the French, *Rothkohle* in German.

Sauvage found by experiments that a perfectly charred coal does not give the largest quantity of combustible matter in the smallest volume, but, on the contrary, that this relative quantity increases to a certain point of the process and then begins to decrease. After the process had been conducted for 5½ hours he claimed to have attained the greatest yield of combustible matter.

His results were as follows:

Wood charred for . . .	3 hrs.	4 hrs.	5 hrs.	5.5 hrs.	6.5 hrs.	In the meiler.
100 kilograms weighed, . . .	65.4	53	47	41.5	89.1	17.2*
100 cb. m. measured respectively, .	86	76	58	55	52	33
A volume, equal to a volume of wood, containing 908 parts by weight of combustible matter, yielded, . .	883	904	1133	1091	1136	1096
Difference in per cent. from combustible matter in an equal volume of wood, ...	—2.75	—0.44	+24.78	+20.15	+25.21	+20.81

After five and a half hours the water and acetic acid are evaporated, and the product is an imperfectly charred coal of dark red or brown color. This product, without water and acetic acid, still contains the tar and combustible gases, both of which contribute to a higher heating capacity.

A simple calculation shows in what degree this higher heating

* This result is rather low for good practice.

capacity is possessed by the red charcoal. Practically 100 kg. of air-dried wood may be said to contain 40 kg. of carbon, 40 kg. of water chemically combined, and 20 kg. of hygroscopic water; computing the centigrade heat unit of carbon at 8080 and deducting for the evaporation of 60 per cent. water, 32,400 heat units, we find in this compound of combustible matter 290,800 effective heat units.

From this, if hard wood is taken and treated in an oven, there can be got

26 kg. of charcoal @ 7640 heat units,	198,640	heat units.
7 kg. of tar @ 4547, " "	31,829	"
2.5 kg. of conc. acetic acid @ 3213 heat units,	8,003	"
Total,	238,472	"

Therefore to make up the original 290,800 heat units, 50,328 heat units must be reckoned as lost in the gases during the process.

This last amount is retained and the acetic acid is removed in the production of red charcoal. In this way, of the forty per cent. loss of combustible matter which accompanies the customary methods of charcoal burning, over thirty per cent. are saved, and made available as heat-producing material, since the red charcoal affords:

From coal,	198,640	heat units.
" tar,	81,829	" "
" combustible gases,	50,828	" "
Total,	280,797	" "

In other words, this fuel retains $\frac{28}{29}$ths of the heating value of the wood, while charcoal represents only $\frac{20}{29}$ths, since the value of the gases lost is equal to $\frac{5}{29}$ths of the raw material, representing $\frac{1}{4}$ of the value of the charcoal, and to this must be added the heating value of the tar gases, $\frac{3}{29}$ths of the raw material or $\frac{3}{20}$ths of the charcoal.

That it is more profitable to preserve this heating capacity in the fuel itself, than to conduct the charring so as to waste and injure the fuel in order to obtain the gaseous products for other purposes, experience has proved in most parts of Germany, and is most evident in this country, where the transportation of the cheap products over country roads would consume all the profits.

The weight of the fuel on the contrary increases over thirty per cent. by gaining over thirty per cent. heating power; and there is a gain, moreover, of nearly ten per cent. in material, which during the

transportation of the more friable common charcoal is lost as coal dust. This gain is made without any extra expense except in the first cost of the plant.

No mode of burning red charcoal in meilers or pits has yet been found. Where, however, as in many or most parts of this country the charring is done in kilns, only a very simple arrangement is needed for conducting the process so as to obtain the red charcoal.

The gases developed by the use of this material in blast furnaces are made available together with the rest of the furnace gases, and thus not a small saving of fuel is effected.

The relation of the total saving to the amount of fuel now used may be seen from the following figures taken from Wedding's report on the iron manufacture in the United States:

For the production of 1000 kg. of iron, say 1500 kg. of charcoal are used, or for the total product of charcoal iron in the years 1873–75 (520,000 tons), 780,000,000 kg. (1,560,000,000 lbs.) of charcoal, on which was lost at least $\frac{2}{5}$ths of the heating value, equal to 312,000,000 kg. (624,000,000 lbs.), or about 31,200,000 bushels, to produce which at least 50,000 acres of woodland are required.

This figure may appear small in a country where the waste is generally counted by millions, but if we consider this amount as the interest of say 1,500,000 acres of woodland under well-regulated forest management with a turn of thirty years, we see that by this loss a capital of at least three million dollars is taken out of circulation, besides what has been spent unnecessarily in the greater cost of the smaller product of charcoal, which represents another two million dollars lost yearly.

I am informed that some of the charcoal furnaces at Lake Superior employ coal not completely charred, and obtain unusually good economy of fuel, but I am not aware that any precise account has been published. It would be very beneficial to other districts, and perhaps to their own, if the Lake Superior operators would make public all the particulars of this practice. Perhaps it would be found that they have stumbled upon an imperfect *charbon roux*, and that by its more systematic use they could achieve still better results.

Another fact, which points in the same direction, is the common practice at American charcoal furnaces of throwing in at the tunnel head not merely half-burned brands, but wood. It is possible, that the latter added in small quantity becomes red charcoal before reach-

ing the tuyeres; but the economy of performing the charring in the furnace may be doubted.

DISCUSSION.

The PRESIDENT remarked that he had seen wood charged in Canada charcoal blast furnaces to the extent of half the fuel, and remembered that Mr. Thomas Macfarlane, a member of the Institute, had published, some ten years ago, figures to show that this practice secured a gain in economy. He had supposed that in that case the wood became half-charred; in fact, a sort of *charbon roux* in its descent through the furnace.

Mr. WILLIAM KENT inquired whether Mr. Fernow could say whether actual gains had been reported from the use of red charcoal in the blast furnace in Germany. If, as stated, this material contained tar and other hydrocarbons, would it not be analogous to bituminous coal, which requires to be coked before use, because the vaporization of these hydrocarbons in the furnace causes a direct loss of heat?

Mr. FERNOW replied that he knew of one furnace in the Hartz which employed the *charbon roux* advantageously in iron smelting. In the manufacture of gunpowder it was decidedly preferred.

Mr. JOHN BIRKINBINE remarked upon the great importance of this subject, not merely with respect to the waste of material, but also with respect to the climatic changes which the removal of the forests caused. The rate at which this devastation went on in the charcoal iron industry is evident from the fact that, according to calculations which he had made, from data collected at a number of these furnaces, a charcoal furnace clears annually two acres of woodland, of average present (second) growth, for each bushel of charcoal consumed per week. That is, a furnace consuming one hundred bushels of charcoal to produce one ton of pig iron (this is generally considered very good work), and having an output of one hundred tons per week, would require a tract of twenty thousand acres to maintain it in blast. There are exceptional cases where the growth of the timber or the character of the wood would produce a yield per acre much in excess of the average employed in these calculations. But making proper allowances for the loss by mountain fires, and averaging the growth and quality of the timber of the charcoal furnaces and forges now existing, an acre will not yield over thirty bushels of eighteen pounds each, per annum, for a continuous industry.

Dr. R. W. RAYMOND said he remembered a conversation with Prof. Church, in which the peculiar charcoal used by the Lake Superior furnaces was discussed, and Prof. Church expressed the decided opinion that it gave results in the blast furnace superior to ordinary black charcoal. There was no doubt that this Lake Superior charcoal was in some way prepared so as to retain a part, at least, of the hydrocarbons of the wood; and the favorable verdict of experience with it would perhaps serve to answer the objection which Mr. Kent had suggested.

Mr. Fernow, in pointing out an economy which tends to the preservation of the forests, had taken a new and, he thought, a wise direction in this question. Mr. Fernow deserved special credit, because he did not propose legislative interference and the introduction of restrictive laws, a subject on which he is particularly qualified to speak, and a recommendation which might have been expected from him as a late member of the Prussian Forest Department.

Under our institutions, and at the present time, it would be extremely difficult to devise or enforce general restrictive laws as to the waste of forests. The government might and should protect its own lands from robbery; but as to private property, so long as cleared land was actually worth more in the market than woodland (as was still the case in many instances), it might be said that the time for restricting by law the cutting down of timber had not arrived. Certainly it was a more immediate necessity to show to citizens themselves that they could utilize with profit a larger part of the product of the forest. He had been informed that in the State of New York there were a number of establishments distilling wood for the manufacture of pyroligneous and acetic acid, and throwing away the charcoal for want of a purchaser.

Mr. BIRKINBINE asked if the charcoal so made approximated in quality to that burned in pits.

Mr. RAYMOND said it was not as good. The kilns produced a larger quantity of inferior quality.

Mr. GRIDLEY said that pits produced about 100 bushels from 2½ cords of wood, while kilns required for the same product but two cords. He would like further information as to the method of manufacturing the red charcoal.

Mr. FERNOW said that the principle in preparing red charcoal in kilns was to have a separate outside source of heat, which is sent through the charge by means of iron flues or by clay flues at the bottom of the kiln, through which the heated air comes in contact

with the charge by means of openings. Precautions must also be taken to allow the condensed water and acid to escape from the bottom. The temperature at which the formation of the red charcoal takes place is 350° centigrade.

He added that he would like to explain briefly his views in regard to government superintendence in the matter of forestry, which had been alluded to by Dr. Raymond. Although not an advocate of the enactment of laws for which no basis has been laid, he was by no means opposed to the idea of government interference in regard to the preservation of forests. On the contrary he was convinced that it was the highest duty of the government to establish the basis for such legislation. He was convinced also that the time for action had arrived, and that it is dangerous to wait until the financial aspect of the matter had made itself conspicuous; he held that the climatological influence of the woodlands, the existence of which is now undoubtedly established, was a much stronger reason for governmental interference than any commercial question whatever. Finally, he expressed his thanks for the warm interest which the subject of forestry had found in the Institute.

ON THE USE OF RED CHARCOAL IN THE BLAST FURNACE.

BY WILLIAM KENT, M. E., PITTSBURGH, PA.

(Read at the Philadelphia Meeting, February, 1878.)

In the paper by Mr. Fernow, on Red Charcoal, read at the first session of this meeting, it was suggested that this fuel might be used in the blast furnace with greater economy than ordinary or black charcoal. In the discussion which followed the paper, it was stated that the charcoal furnaces of the Lake Superior District have used imperfectly burned charcoal with success, and that these furnaces have given the best results in fuel economy on record.

On consulting some of our well-known metallurgical authorities the writer finds that the question of the use of red charcoal, or other imperfectly burned charcoal, or charred wood, is not at all new. In Percy's late work on Fuel, pages 409–414, are given a few facts, which are here condensed, as follows:

Sauvage reports in 1836 that an apparatus was constructed, over the mouth of the blast furnaces at an iron works in Northern France, for partially charring wood. From Sauvage's figures it would appear that a saving was made by using a mixture of the partially charred wood, or "brown charcoal," as it is called, with black charcoal. The scanty results, however, says Percy, are far from sufficient to lead to any trustworthy conclusion on the subject.

Guenyveau, formerly Professor of Metallurgy at the Ecole des Mines, in Paris, reports that in several iron works very good results were obtained by the use of what he calls semi-carbonized wood, but that at other works the results were not equally satisfactory, though no reason could be assigned for this difference. From a comparison of results obtained at several furnaces he inferred that one-third of the wood might be saved by the use of brown charcoal exclusively. But, after having thus reported, he adds that he was assured that the advantage derived from the use of brown charcoal was proportionate to the degree of charring, or, what is the same thing, to its approximation to black charcoal; and instead of heating the wood during four or five hours, it was found necessary to continue the process during ten hours. Moreover, he remarks that it had been the practice to reject as unfitted for blast furnaces any of the charcoal found to be imperfectly charred in circular piles.

A company in Mainz, says Percy, at the present time prepares wood for fuel by heating it to a degree sufficient to cause incipient carbonization, and change its color to reddish-brown. The name *Rothholz* is given to this product. Fresenius recommends it as being easily ignited, and therefore an excellent material for lighting fires; it may be conveniently conveyed and stored, and on burning produces a copious flame and is capable of developing intense heat. These properties, however, do not necessarily recommend it as a fuel for blast furnaces.

In concluding his remarks on these imperfectly prepared charcoals, Percy says that the difference in chemical composition between brown and black charcoal is of itself sufficient to prove that the former has less heating power than the latter. Brown charcoal contains more oxygen and less carbon than black. The main question remains, he says, whether in blast furnaces it would be more profitable to use brown charcoal than black. In the course of descent in the furnace, brown charcoal is converted into black, or, in other words, the carbonization of wood which has been left incomplete is completed in the blast furnace. But this can only be done at the expense of the heat con-

tained in the gases ascending from the lower part of the furnace, and consequently the temperature of these gases will be proportionately reduced in the upper part of the furnace. Such reduction in temperature implies corresponding refrigeration, not only of the fuel, but also of the ore and flux, and may tend seriously to interfere with the process of smelting.

These remarks of Percy coincide almost exactly with those of Bell in his *Chemical Phenomena of Iron Smelting*, in reference to the use of raw coal in the blast furnace. Bell says: "The use of raw coal undoubtedly reduces the temperature of the escaping gases, but on the other hand they are increased in quantity, so that little heat would be available from this source. In consequence the necessary heat required to volatilize the gases of the raw coal, would have to be provided by burning so much more carbon at the tuyeres." He says further that a blast furnace using 22.5 cwts. of coke per ton of iron, ought, were its fuel used uncoked, to consume about 44 or 45 cwts. to do the work. The view is confirmed by what was done in the smaller furnaces in Scotland: "It would seem clear that the consumption of coal required in the furnace itself is actually considerably higher when it is used raw than when coked, for 27 cwts. of coke obtained from coal containing 65 per cent. of fixed carbon, is only equal to 41.5 cwts. of coal against 53 cwts. of the latter actually needful for the process."

Prof. John A. Church, in his paper in the *Transactions*, vol. iv, p. 119, speaking of the excellent work of the Bay Furnace, near Marquette, Michigan, which used only 1922 pounds of charcoal per ton of iron, says: "The fuel used is charcoal, so burned as to retain most of the combustible volatile part, which before the utilization of furnace gas was burned away." It is to be regretted that he does not give us the analysis of this fuel. Prof. Akerman in his report on the iron manufacture in the United States, treating of the charcoal furnaces of the Lake Superior district, recently translated in *Iron*, accounts for the economy of these furnaces by the mechanical structure of the chracoal, but if I mistake not, says nothing of this charcoal being imperfectly burned.

The use of brown or red charcoal in the blast furnace appears to the writer precisely analogous to the use of raw or uncoked coal. The combustible portion of the fuel consists of two parts, the fixed carbon and the volatile hydrocarbons. The office of a fuel in the blast furnace is twofold, first to generate heat, secondly to produce a gas which shall reduce the oxides of iron to the metallic state.

The hydrocarbons in the blast furnace cannot generate any heat, as they are volatilized in a zone in which there is no free oxygen to burn them. They are not burned till after they leave the furnace. They are moreover of no service as reducing gases, for they are volatilized at a temperature below that at which they have any important influence in reducing the ores. The reduction of the ores probably takes place in a zone beneath that in which the hydrocarbons are volatilized. They are therefore useless in the blast furnace, or rather worse than useless, since their volatilization requires the burning of an extra quantity of fixed carbon at the tuyeres. These facts would appear to be conclusive against the economy of using red charcoal in blast furnaces.

In one case, however, there may be an economy in its use, namely, when the escaping gases from a furnace using black charcoal, are from any reason so highly charged with carbonic acid that they do not burn well under the boilers and in the hot-blast ovens, then the use of a small proportion of red charcoal, or of any fuel containing volatile hydrocarbons, would improve the quality of these escaping gases and render them more combustible.

THE NICKEL ORES OF ORFORD, QUEBEC, CANADA.

BY W. E. C. EUSTIS, A.B., S.B., BOSTON, MASS.

(Read at the Philadelphia Meeting, February, 1878.)

In September last I had my attention called by Mr. R. G. Leckie to a deposit of nickel in the township of Orford, province of Quebec. In many ways it has proved to be a subject of great interest.

As this ore is, as far as I can learn, entirely new in mineralogy and metallurgy, it has seemed to me that it would be a matter of interest to the Institute to have laid before it, in a short paper, the peculiarities I have met with in studying it.

This deposit of nickel was first described by Dr. T. Sterry Hunt, our President, in the *Geology of Canada*, 1863, p. 738, in the following terms:

"The general diffusion of nickel throughout the magnesian rocks of the Quebec group has been already noticed. It has, however, never been met with in any considerable quantities in these rocks, although workable deposits of its ores may reasonably be looked for

in some parts of their distribution. On the sixth lot of the twelfth range of Orford, the sulphuret of nickel (millerite) is met with in small grains and crystals, disseminated through a mixture of green chrome-garnet, with calc-spar, and through the adjacent rock. Explorations were made at this place a year or two since in the hope of obtaining copper, which was supposed to be indicated by the brilliant green of the garnet; and lead, small quantities of which are found in the vicinity. The ore of nickel is sparingly disseminated in small grains through the garnet and calcareous spar, and the masses submitted to analysis did not yield more than one per cent. of nickel. It is, perhaps, doubtful whether this small quantity could be extracted with profit."

On page 497 is the following:

"It (the garnet) forms granular masses, or is disseminated with millerite in a white crystalline calcite. The largest crystals are found in druses in the massive portions, but do not exceed a line in diameter, and are dodecahedrons with their edges replaced.

". . . . . This garnet resembles closely the *ouvarovite* from the Urals.

"This beautiful garnet, if obtained in sufficiently large crystals, would constitute a gem equal in beauty to the emerald."

My first visit to the mine occupied several days. We were encamped on an island in Brompton Lake. A half mile distant lay the nickel mine, on the side of a hill. On this deposit there are two shafts being sunk, 180 feet apart; No. 1 is down 41 feet, No. 2 45 feet. At the present depth of No. 1 the vein has an average width of nine feet nine inches.

The hanging wall is a magnesian limestone, the percentage of magnesia is, however, small. The width of this has not yet been determined, but on the surface other smaller veins and branches of the spar and garnet are visible. The foot-wall, a dark-colored serpentine, is very clearly defined.

At a considerable distance south of No. 1 shaft the line of strike is cut at right angles by a sharply defined band of clay slate.

The vein has now pretty much the same characters as before described in the *Geology of Canada*, viz., green chrome-garnet, calcite, and millerite; besides these, small particles of chromite are found. There is no trace of copper or cobalt present, possibly a trace of arsenic, though I have not thoroughly established that yet. The hanging wall contains nickel in small grains.

The following analysis gives a fair idea of the composition of the vein:

Calcite and millerite,	50.40 per cent.
Black specks (chromite),	6.87 "
Chrome garnet,	42.73 "
	100.00

No. 2 shaft has not, as yet, got below the decomposed spar, but has reached good solid nickel ore. It was started on the vein in decomposed spar and pyroxene, carrying occasionally small masses of chrome-garnet. The vein here is fully as wide as in No. 1 shaft.

The pyroxene (analyzed by Dr. Hunt) has the following composition:

Silica,	47.15
Alumina,	8.45
Oxide of iron,	8.73
Oxide of magnesium,	24.55
Oxide of calcium,	11.35
Water,	5 83
	101.06

—*Dana's Mineralogy*, p. 221.

Coming back now to the specimens before us: The chrome-garnet is the beautiful green crystal, a rhombic dodecahedron of the isometric system. It remains absolutely untouched in hot, strong aqua regia. I am still in hopes of finding crystals in some of the many druses which occur in the vein, large enough to show their beauty to the naked eye. The specimens which I have here will require a glass to bring out the crystals.

In the ore near the surface, which only was accessible at the time the *Geology of Canada*, quoted above, was written, the millerite occurred in grains as there described, but as the shafts have gone down, the crystals have increased in size, till now we have the large ones, which show the characteristic needles very plainly. Sometimes these occur in clusters of needles, placed side by side as it were, forming a flat plate.

It (the millerite) varies in color greatly according to the depth. In the samples shown from No. 2 shaft, there appear two distinct, differently colored metallic sulphides, and this was the case with specimens from No. 1 before it got below the decomposed spar. At first it was supposed that magnetic iron pyrites or other sulphides might be present, but the analyses go to prove it all to be millerite.

At first I had grave doubts about the practicability of treating the ore, owing to the infusibility of the chrome-garnet, at the least I expected to have to add fluxes, but the results have proved quite the contrary. The first experiments were made in a Siemens furnace. A black-lead crucible full of the ore was placed on the bank of the furnace, while making low steel. Looking at it fifteen or twenty minutes later, I was surprised to find it liquid. It was poured into a mould, and a good button obtained, which was more ductile then the pieces shown, and had the yellow color to a greater degree when polished.

The next experiment was to run 508 pounds of the ore through a blast furnace. Through the courtesy of Prof. Richards, of the Massachusetts Institute of Technology, I was allowed to use the blast furnace of his laboratory. It is about one foot square by four feet high, and uses gas coke as fuel. I am largely indebted to the great facilities offered by Prof. Richards for the results I have obtained.

Ten minutes after the ore was charged into the furnace, slag appeared at the tap-hole. The whole charge was run through in 2½ hours. 145 pounds of coke were used, making about 3.5 of ore to 1 of coke. 8 pounds of matte or alloy were obtained, containing

Iron, ...	71.84	per cent.
Nickel, ...	22.70	"
	94.54	"

The ore treated was a very lean lot from near the surface, probably containing not over one half of one per cent. of nickel. The slag had a mere trace of nickel.

As to the further treatment of this product, I am not prepared now to make any report. *Prima facie*, it would seem that the problem was a simpler one than most nickel manufacturers have to face, since there is no copper or cobalt present; but not finding it spoken of in the books on metallurgy, I have been obliged to investigate as I have gone along, and my progress has consequently been slow.

At some future time I hope to give the results of the present investigations, and at the same time to be able to report some progress in extracting the chromium in some merchantable condition. Inasmuch as the slag produced must contain somewhere about 6 per cent. of sesquioxide of chromium, it becomes extremely valuable, provided it can be extracted easily, but while some slags produced

yield it up with great readiness, others yield it up with great difficulty.

As to the per cent. of nickel which this ore carries, and which will determine its money value, it is not easy at present to speak with any certainty. At the bottom of No. 1 shaft, pieces taken to be average ones for three-quarters the width, show between three and four per cent. nickel. Specimens from No. 2 look equally rich. What is to be the average yield after the mine is opened up it is impossible to say.

February, 1878.

DISCUSSION.—Dr. HUNT, after alluding to the fact that Mr. Eustis had quoted from his description of the Orford mine, given in 1863, in the *Geology of Canada*, proceeded to refer to the peculiarities of the deposit. It is what by many would be called a contact-vein, lying, as it does, between serpentine on the one side and limestone on the other. He regarded it as a true fissure-vein, lying in the plane of the bedding, and, in support of this view, cited the observation which had been made, that at one point a branch of it penetrates the limestone wall. The veinstone of calcite, holding green chrome-garnet and chromite, with crystals and grains of millerite, or sulphide of nickel, is of great interest to mineralogists. Small crystals of pale-green epidote are also found in this veinstone, and large tabular crystals of white pyroxene. The latter, like the green garnet, had long since been analyzed and described by him in the volume above quoted and elsewhere. The crystals of millerite are remarkable for their size and beauty, some of them being an inch long, while shorter tabular crystals of the species are found nearly one-half an inch in breadth.

In allusion to the statement quoted from his former description, where the rocks holding this vein are referred to what was then called the "altered Quebec group," Dr. Hunt explained that the view that these crystalline schists were altered Paleozoic deposits,—a view which he had formerly accepted, in accordance with the opinions of many American geologists,—had long since been rejected by him as untenable. In 1870 and 1871 he had expressed the conviction that the rocks in question are more ancient than the uncrystalline Paleozoic sediments of the St. Lawrence valley (which are of Cambrian age, and have been variously called the Hudson River group, Upper Taconic, and Quebec group), and that they are to be referred to the Huronian period of Eozoic time.

Dr. Hunt added, that the results obtained by the Geological Survey of Canada in 1876 and 1877 had, in the opinion of Mr. Selwyn, its present director, fully vindicated his view. These results will, probably, soon be officially made public.

ON THE MANUFACTURE OF ARTIFICIAL FUEL, AT PORT RICHMOND, PHILADELPHIA.

BY E. F. LOISEAU, PHILADELPHIA.

(Read at the Philadelphia Meeting, February, 1878.)

UNTIL June, 1868, it had not been attempted, either in this country or abroad, to manufacture by mechanical means, from anthracite coal-dust, artificial fuel for domestic use. Several attempts had been made to utilize coal-waste by converting it into a fuel for manufacturing purposes, but none of the processes were original, and they were merely applications of the well-known European processes and machinery, slightly modified by American ingenuity and mechanical skill. With one exception all those attempts have been failures.

The great difficulty in the application of European processes and machinery has always been the limited production, and the excessive cost of the manufactured product, as compared with the cost of mining and preparing the ordinary anthracite coal for the market.

The only serious and intelligent attempt to manufacture, on a large scale, artificial fuel for manufacturing purposes, has been made by the Anthracite Fuel Company, whose works are erected at Fort Ewen, near Rondout, New York. This company, organized under the auspices of the Delaware and Hudson Canal Company, had to go through the usual course of difficulties, breakages, and disappointments, which seems to be the lot of every new industry. Thanks, however, to the energy and perseverance of Mr. L. L. Crounsse, a gentleman of means, from Washington, D. C., the enterprise succeeded, and it is to-day established on a permanent basis.

In order to increase the production, and to reduce its cost, the Anthracite Fuel Company was compelled to change most of its plant, and to erect more powerful machinery, producing lumps of a larger size, almost twice the size of the lumps made previously by the same company. This increase in the size of the lumps has been resorted to in Europe as well as in this country, in order to increase

the production, but the lumps being large, require a strong draft for their combustion, and consequently the use of artificial fuel has been confined almost exclusively to steamers and locomotives.

In order to manufacture a fuel which could be used in all kinds of furnaces, it was evident that the lumps should not exceed a certain size, and machines for this purpose were invented by Mr. Revollier-Bietrix, of St. Etienne, France, and by Messrs. Mazeline and Couillard, of Havre, but the production of these machines, in 24 hours, did not exceed 48 gross tons, in lumps weighing each 1 kilogram, 250 grams. No better results have been obtained in Europe to this day, and no smaller lumps have been manufactured there.

The compressing machines, above referred to, are constructed on the principle of Gard's brick machines in this country. Circular horizontal tables, containing either stationary or movable moulds, revolve under a pug mill, in the centre of which is a vertical shaft, with knives placed at an angle. These knives force the materials into the moulds. The bottom of the moulds is formed by followers, fitting exactly, which travel on an inclined track under the moulding table, gradually compressing the materials, and finally expelling the brick-shaped lumps, which are afterwards removed by hand, or pushed by a scraper on a conveying belt.

The problem, therefore, was to obtain a large production in lumps of a small size, and my efforts for the last ten years have been directed towards the solution of that problem.

I devised and designed, to the best of my ability, several machines which my experience had told me were best adapted to the continuous and automatic production of lumps of a small size, the main machine being the press. I had previously made a good many experiments, on a small scale, which had demonstrated beyond a doubt the practicability of the process. A good many of our members will remember to have witnessed in Mauch Chunk, in 1874, the manufacture of the fuel by a small moulding machine, which was the embryo of the large one erected at Port Richmond. As is usually the case, the large machine did not work as well as the small one; it had to be modified several times, according to what practical experience demonstrated to be an absolute necessity. One modification suggested another, until at last, in spite of all the prophecies to the contrary, I succeeded in getting the press to work in a very satisfactory way. The production is 137½ tons, in 10 hours, the lumps weighing but two ounces each.

I will give here a brief description of the moulding press:

Two rollers, each 30 inches in diameter, and 36 inches in length, contain on their surface semi-oval cavities, connected together by small channels, which allow the escape of air and excess of material, each cavity or recess communicating by four of those channels with the surrounding ones. These cavities extend in close proximity to each other, in regular rows over the whole length of the rollers, the recesses of every other row being intermediately between those of the adjoining row, in the nature of the cells of a honeycomb, so that small metallic contact surfaces are formed, and the entire surface of the rollers is utilized for compressing the composition into lumps of an egg-shaped form. The shafts of the rollers are cast solid with the rollers, and they are 10½ inches in diameter. Each roller weighs over a ton. On top of these is a hopper, 36 inches long, and 30 inches wide, in which the materials to be compressed are discharged from the mixer. In this hopper a series of knives, screwed to a small horizontal shaft, revolve rapidly, and keep the materials in a granulated state.

When the materials to be compressed, happened to contain too much water, which was often the case, the mixture was very plastic, and the lumps were spongy and unfit for use. When the mixture contained the required amount of water, the rollers would spring, and would deliver nothing but half-lumps. Every means were resorted to in order to prevent the springing of the rollers, and to mould complete lumps. All sorts of contrivances, suggested by able mechanical engineers, were tried, without success. Considerable time was required, and a large amount of money was expended to obtain the desired result. The task had been given up by a good many as a hopeless one, still I persevered. I had observed that, when the hopper was almost empty, the shaking of the rollers stopped, and the half-lumps of the last rows remained in the moulds, instead of being discharged on the conveyer below. I concluded from this fact, that the springing of the rollers was produced by an excess of material above the compressing point, and that if I could regulate the quantity of material a little above that point, the springing of the rollers would cease, and perfect lumps would be produced. The thought was a happy one. I devised several attachments to regulate the delivery of the materials on both rollers, with only partial success, until at last I concluded to muffle one roller entirely with sheet iron, and to deliver the materials on the other one. In the centre, above the point of contact of the two rollers, I placed an iron gate, 36 inches long, 3 inches thick, and 3 inches wide, guided

at both ends inside of the hopper, and working up and down, along those guides, by means of two long bolts, threaded at one end, passed through a stationary nut, fastened in a wooden cross-piece above the hopper, and worked by small hand-wheels. By reducing or increasing the space between the bottom of the gate and the roller, more or less material was carried away by that roller. At the point of contact between the rollers, the materials which have been delivered on one roller are pushed into the cavities of the other one, and perfect lumps are formed and discharged on the conveyer below. The difficulty is entirely overcome, and the press has worked well ever since.

The coal-dust accumulated in the yard is on swampy ground; the tidewater comes up to the middle of the lot, and the capillary attraction draws the water in the coal-pile up as high as seven feet. During dry weather, we obtained from the top of the pile coal sufficiently dry, but when it rained, the coal-dust was so wet that it clogged in the screen, in the chutes under the chain elevators, in the coal pocket, and in the distributor. This was remedied by erecting a gravel-drying apparatus, composed of two drums, 18 feet in length, and 36 inches in diameter, placed on an incline, and heated underneath. The drums revolve slowly; the coal-dust, as it comes from the yard, is fed at one end of each drum; it travels the entire length of the drums in five minutes, while being kept stirred by stationary lifters, fastened inside the drums, and it is finally screened and discharged at the other end perfectly dried.

In the drying oven we had the next trouble. The first plan consisted in carrying the moulded lumps through the oven in 40 minutes, on five endless wire-cloth belts, placed underneath each other, and geared together, so as to travel in opposite directions. The lumps falling from the rollers on the upper belt were conveyed into the oven at the speed of 12 feet in one minute, travelling the whole length of the oven, and falling from one belt to another, until they emerged from the oven on the lower belt, to be discharged therefrom into the waterproofing machine.

When the five wire-cloth belts were loaded, the oven contained about six tons of coal. Under the weight of the fuel the belts would stretch, sag, and drop the greater part of the lumps on the bottom of the oven, where they broke to pieces. The belts were changed several times, and replaced by others of smaller mesh and stronger wire; additional rollers were placed under the wire-cloth to stop the

sagging as much as possible, but the belts would stretch in spite of all, and the use of wire-cloth as conveyers had to be abandoned.

It was also ascertained that the fuel was imperfectly dried, and that the contraction of the clay, used as a cement, could not take place when the lumps remained only 40 minutes in the oven. The solidity of the lumps was found to depend entirely upon the length of time during which they remained in the oven, and the following tests demonstrated this fact to a certainty:

Three lumps which had been in the oven during 40 minutes, supported a weight of 99 pounds before being crushed.

Three lumps which remained in the oven one hour and ten minutes, stood a weight of 148 pounds before being crushed.

Three lumps which had remained in the oven during six hours, stood a weight of 371 pounds before giving way.

Each one of these lumps came from the same mixer, and contained the same materials, and in the same proportions.

The problem then was not only to modify the oven so that it would hold sufficient fuel during six hours, but to modify it in such a way that the fuel could be discharged by its own gravity, when sufficiently baked. To do this seemed an insuperable difficulty. I studied for weeks one plan after another, until at last I conceived one which I thought would answer the purpose. I submitted the plan to competent authority, and it was approved as a feasible and practicable one.

The plan consisted in doing entirely away with wire-cloth, in suppressing the four lower conveyers, and in using for the top conveyer sections of sheet iron bolted to bridge links of malleable iron, placed at regular intervals, in three endless link chains running in grooves and moved by toothed wheels. The fuel was to be removed from this top conveyer by gates thrown slantingly across it, and it would slide down iron chutes, forming a spiral, upon bars of wrought iron set at an angle across the oven, and resting upon cast-iron racks, placed at the lowest point, 18 inches above the flue. Through those bars and through the mass of the fuel, the hot air was to pass and dry the fuel.

When the fuel was baked it was to be discharged by its own gravity, through a series of gates, on to an outside conveyer, placed alongside the oven, and made of sections of sheet iron, bolted to link chains like the top conveyer. This outside conveyer was to dump the fuel into an elevator, and from this elevator the lumps were to be delivered into the waterproofing machine.

The alterations described above were made, and the whole oven became in this way a kind of coal-bin, holding very near one hundred tons of fuel.

When the oven, modified as stated, was tried for the first time, it contained nearly one hundred tons of good lumps. It was heated to about 300° Fahrenheit, and in about four hours the whole mass of fuel was on fire. It required ten men working two days and one night to extinguish the fire. The fuel was entirely spoiled, but no injury was done to the walls of the oven, or to the inside fixtures of the same. In order to avoid such an accident in the future, the cast-iron flues were covered with loose bricks. Three times in succession the oven was again filled, heated, and when it was supposed that the lumps were sufficiently baked, the discharge gates were opened, and the fuel was found to be as moist as when it entered the oven.

The oven was allowed to cool, and was carefully examined by Dr. Charles M. Cresson, of this city, and it was ascertained by him that the openings for the admission of air and for the escape of the evaporated moisture were much too small. The fuel, as it seems, had simply been submitted to a steam bath, instead of being baked, and the defect could be easily remedied, according to Dr. Cresson's opinion, by a false sheet-iron bottom, which would bring the air in close contact with the iron flues, and at the same time prevent the fuel from catching fire by radiation from the flues. Dr. Cresson advised larger openings for the admission of air and for the outlet of moisture. The sizes of those openings have been carefully calculated, and there is no doubt that when these alterations shall have been made, the working of the oven will be as satisfactory as that of the balance of the machinery.

The waterproofing process has been tried several times, and has been found to work well. Instead of condensing the vapors of the benzine, as was at first intended, we were compelled, in order to avoid accidents, to remove them by a suction fan. These vapors pass through a system of pipes; they are here mixed with twenty times their volume of atmospheric air, so as to render them innocuous, and they are then expelled above the roof of the building.

It must not be forgotten that the process applied, and the machines used, were entirely novel, and considering all the difficulties in the way of a success, the results obtained have been very satisfactory.

The large amount of money expended, the many disappointments which have occurred, and, above all, the depressed condition of the

coal trade during the last two years, have discouraged some of our stockholders, and we have thus been placed in a financial condition which has prevented the completion of the experiment. In a few days, however, the financial difficulties will also be entirely overcome, a new company will be reorganized, and I hope that in a few weeks the works will be in successful operation, and the fuel will be in the market.

PHILADELPHIA, February 26th, 1878.

NOTES ON THE SALISBURY (CONN.) IRON MINES AND WORKS.

BY A. L. HOLLEY, C.E., NEW YORK CITY.

(Read at the Amenia Meeting, October, 1877.)

THE three principal mines from which the celebrated Salisbury iron ores are obtained are called respectively the "Old Hill," "Davis," and "Chatfield" ore beds, and are situated in the town of Salisbury, Litchfield County, Conn., on the eastern slope of the Tocconuc range of hills.*

The Old Hill Ore Bed is a tract of land of 100 acres, originally granted by the General Court in October, 1731, to be laid out by Daniel Bissell of Windsor. It was soon after surveyed and located by Ezekiel Ashley and John Pell. The descendants of Ashley are still proprietors in the mine. The supply of ore has been very abundant, and for many years was easily obtained, but latterly the cost of raising has been greatly increased. Up to about 1840 the average yield was estimated to be about 4500 tons per annum. The production has gradually increased until the average yield at present is estimated at 15,000 tons annually. The largest production in any one year was about 20,000 tons. The proprietors of this mine were incorporated many years ago under the style of "The Salisbury Ore Bed Proprietors."

The Davis Ore Bed, named after an early owner, was originally called Hendricks Ore Bed, and was owned before the organization of the town of Salisbury by Thomas Lamb, one of the first settlers

* The data from which the historical portion of these notes has been compiled were collected by the Barnum-Richardson Company, of Lime Rock (Salisbury), Conn.

in the town. Ore was mined in this bed as early as 1730 or 1731, and was taken by Lamb to supply his forge at Lime Rock. It was in early days transported in leathern bags on horses. This mine has been worked almost constantly since first opened, showing an increased production. The average yearly yield at present is estimated to be about 15,000 tons. The property has passed through several ownerships; the proprietors are now incorporated under the name of Forbes Ore Bed Company.

The Chatfield Ore Bed was originally owned by Philip Chatfield, from whom it takes its name, and was opened soon after the other beds were. It has been steadily worked since first opened, showing also an increased production. Its annual yield at present is estimated to be 12,000 tons. Notwithstanding these mines have been so long and so constantly worked, the supply of ore is still abundant and apparently inexhaustible.

There has been no special effort to increase the production, as these ores are not in the market, and it is only desired to raise a sufficient supply for the furnaces in the immediate vicinity of the mines. The ores are all of the brown hematite variety, and of the same general character, yielding about forty-five per cent. of iron. The process of raising the ore and making it ready for the furnace has been much improved within the past twenty years; it is crushed and washed by machinery before leaving the mines. The ore is raised entirely by open mining, and the beds are now worked at a depth of from 75 to 100 feet. In addition to the mines mentioned above, the Barnum-Richardson Company is working mines at Amenia and at Mount Riga, both on the New York and Harlem Railroad, just over the New York State line, and on the western slope of the Tocconuc Hills. These mines produce ores very similar in character and value to those already described.

The first forge in this vicinity was erected in Lime Rock by Thomas Lamb, as early as 1734. He took his ore from the Hendricks (now Davis) Ore Bed. Several different parties succeeded to the ownership; among those who occupied it longest, and operated it most successfully, were Messrs. Canfield & Robbins. They operated a forge and blast-furnace on this site for many years, and also had a forge and blast-furnace (built by Leman Bradley in 1812) on the Housatonic River, just below the Canaan Falls, using at both places Salisbury ores.

The Lime Rock property came into possession of its present owner in 1863, and in 1864 a new blast furnace was erected, which

has been in operation up to the present time. About the year 1748 a forge was erected in the present village of Lakeville (then called Furnace Village), and in 1762 John Haseltine, Samuel Forbes, and Ethan Allan purchased the property, and built a blast furnace. This is supposed to be the first blast furnace built in the State. This property in 1768 came into the possession of Richard Smith, of Boston, who, being a Loyalist, returned to England upon the breaking out of the war. The State took possession of the works, and appointed Col. Joshua Porter their agent in its management, and upon orders of the Governor and Council large quantities of cannon, shot, and shell were made during the Revolurionary War for the General Government. John Jay and Gouverneur Morris were often there superintending the casting and proving of the guns, and at this time the Salisbury iron gained a celebrity which it has never lost for superior strength and general quality. The cannon were intended chiefly for the navy, and after the war the navy, to a considerable extent, was supplied with guns made from the same iron. The ship of Commodore Truxton, the *Constellation*, and the celebrated *Constitution*, "Old Ironsides," were supplied with Salisbury cannon. The furnace was afterwards owned and operated for many years by Messrs. Holley & Coffing, who also operated a forge and furnace at Mount Riga.

The forge on Mount Riga was built about the year 1781 by Abner or Peter Woodin. Daniel Ball succeeded, and the works were for many years known as Ball's Forge. Seth King and John Kelsey commenced building a furnace there about 1806, but were not able to complete it, and in 1810 it came into possession of Messrs. Holley & Coffing, who the same year finished it, and for many years carried on an extensive business. Pig iron, anchors, screws, and various kinds of manufactured iron were made there. These works and those at Lakeville were abandoned many years ago, and the property at Mount Riga, including the water privilege, which is very valuable and one of the finest in the State, is now owned by the Millerton Iron Company, Irondale, N. Y.

There were also built at East Canaan two blast furnaces for the manufacture of pig iron from Salisbury ores, one about 1840, by Samuel Forbes, and one about 1847, by John A. Beckley.

The first foundry for the melting of pig iron was built at Lime Rock about the year 1830, and soon after came under control of Milo Barnum, who was the founder of the present Barnum-Richardson Company. He associated in the business Leonard Richard-

son, and within a few years his son, William H. Barnum, was taken into the partnership.

The foundry business was carried on in a small way in connection with the store; their productions consisted chiefly of clock and sash weights, plow castings and other small work. The business gradually increased until about 1840, when they began the manufacture of railroad work, the first of which was chairs for the Boston & Albany Railroad, then building from Springfield to Albany; the castings were transported by teams to Springfield and to Chatham, a distance of about fifty miles.

The great tensile strength and natural chilling qualities of the Salisbury iron proved it of great value in the manufacture of cast chilled car-wheels, which naturally followed in a few years the making of smaller railroad castings. The iron early obtained, and has since held, the reputation of being the best known for this purpose.

In 1858 the company obtained possession of the Beckley furnace at East Canaan, and in 1862 purchased the Forbes furnace at the same place. They also, about this time, purchased the foundry at 64 South Jefferson Street, Chicago, and organized a joint stock company under the name of the Barnum-Richardson Manufacturing Company, for the continuance of the foundry business. In May, 1864, the Barnum-Richardson Company, a joint stock company, was organized with William H. Barnum as president and general manager. It has since largely increased its works by building, and by acquiring further interests in mining and furnace companies. A third and improved furnace was built at East Canaan in 1872; in 1870 a second foundry was erected at Lime Rock. A new wheel foundry was built in Chicago in 1873.

The foundries at Chicago use the Salisbury iron, and have a capacity in the two shops of 300 wheels per day. The company uses, at its Lime Rock works, Salisbury iron also, and have a capacity of 200 wheels per day.

In 1840, there were in this vicinity four blast furnaces in operation, each using an average of 600 bushels of charcoal and producing three tons of pig iron per day. There are now seven blast furnaces owned by the company, of which William H. Barnum is president and general manager. They use each an average of 1200 bushels of charcoal, and produce eleven tons of iron per day. The new furnace at East Canaan at its last blast made an average of eighty tons of iron per week, this being the most advantageous

blast known to have been made in a charcoal furnace of this size. The seven furnaces are located within a radius of eight miles from Lime Rock, and are situated as follows: three at East Canaan, one at Lime Rock, one at Sharon Valley, one at Cornwall Bridge, and one at Huntsville. In connection with the latter furnace there is a car-wheel foundry at Jersey City, having a capacity of 150 wheels per day, and using the iron exclusively from this furnace. The Salisbury pig iron shows an average tensile strength of about 30,000 lbs. to the square inch, and, besides being valuable for ordnance and railroad purposes, it is extensively supplied for malleable and machinery uses. The wheels made at the Barnum-Richardson Works have been largely used in the United States, Canada, and foreign countries, particularly in South America. Their high quality is too extensively known and certified to require further mention in this paper.

The opening of the Connecticut Western Railroad has brought these mines and furnaces within easier access of each other, and has also enabled the furnace companies to procure a portion of their supply of charcoal from a distance, most of it being brought from Vermont.

NOTES ON THE IRON ORE AND ANTHRACITE COAL OF RHODE ISLAND AND MASSACHUSETTS.

BY A. L. HOLLEY, C.E., NEW YORK CITY.

(Read at the Amenia Meeting, October, 1877.)

THE existence of iron ore and anthracite coal in the neighborhood of Providence, R. I., has long been known, chiefly as a geological fact; that these materials, so near to each other and to tidewater, are of such a good quality and are present in such large quantity, as to have seriously raised the question of establishing blast furnaces there, was a surprising fact to me; and I have thought that the few notes I have lately gathered on the subject would be of interest at this partly New England meeting.

The coal field referred to has an area of above 400 square miles, and is found throughout the belt of transition rocks extending from Newport Neck to Mansfield, Massachusetts. It underlies the cities of Providence and Newport, and the towns of Middletown, Portsmouth, Jamestown, Warwick, Barrington, Cranston, North Provi-

dence, Cumberland, Bristol, Warren, and East Providence in Rhode Island, and Seekonk, Attleboro, Wrentham, and Mansfield, in Massachusetts. The amount of coal is not estimated, but very roughly stated at "hundreds of millions of tons" in a report of "The Rhode Island Society for the Encouragement of Domestic Industry." Professor Ridgway, in a memorial to the General Assembly in 1868, states that the field is a large but shallow one, made up of a cluster of beautiful coal basins, being identical with the lower coal series of the anthracite basin of Pennsylvania. The coal on the edges of the field has been not only broken up, but altered, by heat and pressure, such as the Pennsylvania field seems to have escaped; but Professor Ridgway states that it is regular and undisturbed, and less altered, in other parts. Still later—in 1875—a hole was sunk a little over 700 feet, at a point in Massachusetts some five miles from Providence, in the centre of the basin, and a bed of coal nine feet thick was found at this depth. Its quality, judging from the core brought up, was superior to the coal previously worked. All this coal has a red ash, and burns with great freedom and with a fuller blaze than other anthracite. The ash is quite fusible, so that a moderate blast is required. Some time ago, Mr. Samuel L. Crocker, of the Taunton Copper Company, stated that, for about twelve years, he had used 10,000 tons annually of this coal from the Portsmouth mine, in various manufacturing establishments and for domestic purposes, and that, for steam and all ordinary purposes, it was quite as good as Pennsylvania anthracite; while, for smelting copper ores, it was the best mineral fuel. More recently, the Taunton Copper Company have acquired this mine, and are now raising their own coal. The main shaft measures 1400 feet on the incline, and the gangways aggregate a length of 3½ miles. Another mine at Cranston, from which some thousands of tons were formerly shipped, has recently been reopened with a capacity of 100 tons per day. Most of the workings have been on the outcrop, where, as before stated, the coal is broken and altered. But the alteration seems to have pretty well freed the coal from sulphur, and has also given it free-burning qualities.

Prof. Jackson's analysis of the Portsmouth coal is as follows:

Water and volatile matter, ...	10.00
Fixed carbon,.	84.50
Ash of dark red color, ...	5.50

Prof. Shaler's analysis of Cranston coal (1876) is as follows:

Volatile matter expelled at red heat,	3.55
Fixed carbon,	82.25
Ash,	5.65
Hygroscopic moisture,	8.55
	100.00
Sulphur,	0.026
Specific gravity,	1.839

The magnetic iron ore deposit at Cumberland, three miles from Woonsocket, and twelve from Providence, is the most valuable in the State. The "Cumberland Iron Hill" is a mass of ore 500 feet long, 150 feet wide, and 104 feet high, and is estimated to contain over a million tons above natural drainage. Probably a very much larger quantity lies below ground. The ore is not rich in iron—it averages 35 per cent.—but it is extremely free from sulphur and phosphorus, the latter element, as lately determined at the Bethlehem Iron Works, being but 0.026 per cent. The Bethlehem analysis gives the iron in one specimen as 30.86 per cent., and in another at 33 per cent., and the silica as 25.5 per cent.

Dr. Chilton's analysis is as follows:

Per- and protoxide of iron,	58.50
Oxide of manganese,	2.10
Oxide of titanium,	3.66
Alumina and silica,	26.33
Magnesia,	6.80
Lime,	0.65
Water and loss,	1.96
	100.00
Metallic iron,	42.58

Such an ore mined by open quarrying with natural drainage, and almost on tidewater, would seem to be of some value for the steel manufacture.

There are also hematite deposits, the largest being at Cranston, five miles from Providence.

The analysis of this ore by Prof. Willis in 1870 is as follows:

Volatile matter,	14.950
Peroxide of iron,	76.285
Protoxide of iron,	trace
Silica,	4.840
Alumina,	2.100
Sulphuric acid (0.047 sulphur),	0.118
Phosphoric acid (0.199 phosphorus),	0.458
Protoxide of manganese,	0.080
Lime,	0.500
Magnesia,	0.410
Loss,	0.200
	99.936
Metallic iron,	58.40
Metallic iron in calcined ore,	63.60

The manufacture of iron in Rhode Island is not exactly a new subject, since it commenced in 1703. Many cannon were cast here from these ores for use in the Revolutionary War and in the war of 1812. The charcoal iron manufacture closed in this State in 1834, when anthracite iron began to be introduced. The authorities of the time pronounced the iron of very superior quality. The Cumberland and Cranston ores were mixed in equal quantities.

It has been estimated that pig iron can be produced in this region at less than $16 per ton, which is no doubt true, seeing that ore, coal and limestone are adjacent and easily mined, provided the coal turns out to be a good blast-furnace fuel. I do not learn that experiments have been made in this direction. But whether iron is produced here or not there is already a largely growing development of coal mining, and it seems probable that ore of this quality, so near tidewater, may find a profitable market.

THE MESOZOIC FORMATION IN VIRGINIA.

BY OSWALD J. HEINRICH, MINING ENGINEER.

(Read at the Philadelphia Meeting, February, 1878.)

DURING the last twenty years much has been done to investigate and define the Mesozoic formation of the United States along the Atlantic States, as well as in the Territories. The investigations of Professors Hitchcock, Emmons, Hayden, H. D. Rogers, and those now in progress in connection with the geological surveys of Penn-

sylvania and New Jersey, under the various eminent leaders, have given decided answers to many questions formerly existing, and will throw, as they have already done, much light upon the character of this interesting formation. It is much to be regretted that this formation, existing in the State of Virginia, and first defined there nearly forty years ago, by Professor W. B. Rogers, has since received no public attention. This is the more to be regretted, because Professor Rogers pointed out the economical value of some of its deposits. In order to preserve the results of a series of observations and explorations conducted there during the last few years, and furthermore to preserve the almost inaccessible public records of the former investigator, I beg to submit the following remarks to the Institute.

I. Geographical Distribution of the Mesozoic Formation in Virginia, its Outlines and Area.

Probably more than in any other of the Atlantic States, or in the Territories, this formation occurs in Virginia in isolated tracts and patches of greater or less magnitude, some being of very limited extent. They appear so now, at least, but by observing them upon the map, a former connection between the tracts may be traced out, by considering the lines of bearings, and comparing the geological structures in Virginia amongst themselves, as well as with those extending into the border States, North Carolina and Maryland. It is also indispensable to take into consideration the elevations now presented by the topography of the country (see Map, Plate V).

For a clearer conception of these facts it will be necessary first to define the outlines of the various tracts, and for a guide we will follow the statements in the various annual reports of Professor W. B. Rogers, which, unfortunately, are now almost inaccessible. They may be enumerated as consisting of four divisions or two double ranges, their main axes running very nearly in parallel lines to each other, and also parallel to the main course of the Blue Ridge mountains, with a bearing from S. 30° to 37° W., the ranges being also nearly the same distance from each other. Proceeding from the east to the west, and also from northeast to southwest, in the line of trend for each, we may designate the following divisions, viz.: A., the Eastern; B., the Middle-eastern; C., the Middle-western; D., the Western division; each consisting of numerous tracts.

A. *The Eastern Division.*

1. *Petersburg deposits.* Extending from Richmond to Petersburg, Chesterfield County, and further south to Greenville and Brunswick counties.

Its shape, rather irregular in outline, is nearly that of a right-angled triangle, stretching in its western irregular boundary from Richmond to Petersburg in a nearly meridional line, thence in a northeast course, defined by the overlapping rocks of the Tertiary formation, towards City Point, on the south bank of the James River, and from there in a northwest course across the James River about one mile east of the neck at Dutch Gap, thence in a course a little less northwest to Richmond, where it is exposed in the ferruginous sandstones, the lowest stratum in the valley of Shocko Creek. It can also be noticed upon the top of the tableland stretching beyond the city along the James River within two or three miles west of Richmond, in isolated patches, in Henrico County.

Its entire length would be about 33 miles from north to south, and 8 miles from east to west at City Point, comprising an area of about 95 square miles.

2. Further south the formation occurs in Greenville County, west of Hicksford, and also in the adjoining county of Brunswick, east of Lawrenceville. None of these regions have yet been accurately defined.

B. *The Middle-Eastern Division.*

1. *Taylorsville deposits.* Containing the territory of sandstones and slates, underlying the Tertiary strata about the South Anna River, from the North Anna River to Ashland, Hanover County.

This tract, which is not well defined, is of a somewhat trapezoidal shape. In consequence of the easy decomposition of its constituent rocks, and the difficulty of distinguishing the Mesozoic *débris* from that of the underlying Eozoic rocks, which are almost identical with the Mesozoic in material, the lines of demarcation are often obliterated.

Beginning at the head of Machump Creek, near the C. and O. R. R., south of Hanover Courthouse, the boundary extends in a nearly westerly direction to the headwaters of Beech Creek, thence in a variously curved northern line to near the mouth of Beaver Creek, at Newfound River, thence in a northeasterly direction to the neighborhood of Chesterfield depot. The tract, comprising nearly all

the area between this boundary and the North Anna River, is about 8 miles wide between the extreme east and west points, and 10 miles long in its northeast and southwest course, and has an area of about 60 square miles. Taylorsville is situated nearly in its centre.

2. *The Springfield deposits*, or Springfield coal basin, a small isolated basin, near Hungary Station, on the F. and P. R. R. in Henrico County, a short distance south of Chickahominy River.

It is a basin of elliptical shape, and extends southwest to the head waters of Deep Run. It is situated northeast of the main body and east of the northern spur of the next tract, No. 3, but entirely isolated from it by nearly three miles of Eozoic formation. Its length, northeast and southwest of the main axis, is about 2 miles, and its width, about one-fourth of a mile; its area is about 1.6 square miles. The old Deep Run coal mines have been worked in this basin.

3. *The Richmond deposits*, or Richmond coal basin. This, generally known as the Richmond coal field, is by far the most important of the deposits. It extends from the northern county lines of Goochland and Henrico counties across the James River to the Appomattox River, lying in Powhatan, but mainly in Chesterfield County.

About 11 miles west of Richmond it extends upon both sides of the James, but mainly upon the south. Its shape somewhat resembles the contour of a plum, with its peduncle pointing north, formed by a narrow branch extending northwards from Tuckahoe Creek for about six miles, averaging about one mile in width.

We will commence to trace its boundary at its northern extremity in the northeast corner of Goochland County, above the head waters of Little Tuckahoe Creek at the northern apex of the triangle formed by the "Three-chopped," the Manakin Ferry, and Pounce's Tract, or Westham roads. It here crosses the first-mentioned road, about half a mile east of Little Tuckahoe Creek, intersecting the main Tuckahoe Creek near the Carbon Hill pits, and running almost due meridionally, forms the east boundary of the spur. It now bears southeast, towards the James River, crossing the same a little above the United States Arsenal, turning again in a nearly due meridional course in an irregular line (in consequence of some smaller outlying patches) to the R. and D. R. R. about half a mile east of Coalfield Station, and a little west of Falling Creek, where we come into the neighborhood of the oldest coal mines in the country, the old Black Heath, Ætna, and Midlothian. Then continuing nearly in the same direction, and maintaining a course a little east of the road leading from the pits south to the Genito road, and passing through the western part of St. Leger's

farm, the boundary line crosses Swift Creek a short distance below the mouth of Dry Creek; continuing in this direction, and a little east of Dry Creek, for a short distance, it bears now into a course about S. 22° W., striking the headwaters of that creek; turning still more westward, about S. 57° W., it strikes the Clover Hill Railroad about half a mile west of Summit Station, and resuming again the former less westerly course, it passes about half a mile east of Winterpock Creek, crossing the Devil's Bridge road about five-eighths of a mile east of the creek, and maintaining nearly the same course it strikes the Appomattox River about one mile above Eppes's Falls.

From this point the boundary nearly coincides with the course of the river as far as Winticomack Creek. This forms the most southern extremity of the deposits, there being very few exposures of the sedimentary rocks south of the river. Now, abruptly turning to the northwest and following very nearly the course of the river, the boundary line strikes obliquely across it, as is shown by the Eozoic rocks about one mile below Devil's Bridge, whence it passes to the mouth of Sappony Creek, following the course of the river to near Goode's Bridge, presenting one or two small patches of the sedimentary formation on the south side.

Assuming now a course nearly due north, the boundary crosses the road from Colesville to Genito, about half a mile east of Skinquater Creek, and continuing a little east of that creek, it crosses the road from Chesterfield Courthouse to Genito about half a mile from the creek; thence it is extended so as to intersect Swift Creek about one mile below the road from Genito to the main Buckingham road, crossing the latter about one mile east of their junction. Bending more eastwardly, pursuing the Dittoway branch of Jones's Creek, and then the creek itself for some distance, it crosses the James River in a line east of northeast, about a mile and a quarter west of Manakin Town ferry. Passing northeast on the north side of James River by Dover Church, the boundary line intersects the broad branch of Tuckahoe Creek a short distance above its mouth; turning then abruptly northwards, even a little west of north, and forming the western boundary of the spur, it crosses the Three Chopped road a little east of Big Tuckahoe Creek, and after keeping its course almost due north rounds off and strikes the point at which we started to trace the boundary.

The main body of this area as delineated above, is accompanied by a number of smaller branches and outlying basins, which either are

entirely separated from the main body, or, as it is frequently the case, form only branches of the main body, produced by local anticlinal ridges of greater or less magnitude. Among the most important on the eastern boundary are those which occur south of the James River and the R. and D. R. R., in the neighborhood of the National and the old Black Heath mines, the Union mines (Greenhole), east of the Midlothian, and some still less extensive at the Clover Hill mines, near the southern extremity at the Appomattox, all of them in Chesterfield County. Upon the western margin we notice a branch west of Sampson's Hill on the north side, and west of Jones's Creek upon the south side of the James. Extending from a short distance north of the river, this prong unites with the main body near the Dittoway branch and the upper part of Jones's Creek in Powhatan County.

Including the northern spur the length of this basin will be about 31½ miles, over 24 miles of it in the main body. The width varies from 7½ to 10 miles, comprising in all an area of about 189 square miles.

C. *The Middle-Western Division.*

1. *The Aquia deposits.* Including the sandstones and slates underlying the Tertiary strata about the western bank of the Potomac, from Mount Vernon across Fredericksburg to the Massaponax River, in the counties of Fairfax, Prince William, Stafford, and Spottsylvania, Aquia lying near the centre of its western boundary.

Its shape is that of a narrow border, about four miles broad along the Potomac, widening out abruptly at its southern extremity by bulging westward as the area progresses southward. The more northern tract skirts the Potomac from the upper extremity of the cliffs at Mount Vernon, which forms the northern termination. Its western margin, in a southwest course, is observed a little to the east of the old road from Fredericksburg to Colchester and Alexandria; passing east of Colchester it crosses Neabsco Creek a little east of the road; also Occoquan River, about three and a half miles west of High Point at Gily Creek. Extending to Dumfries, on the Quantico Creek, an eastern inundation from the main course will be observed, pinching the margin about two miles eastward. Bearing again more westwardly until it assumes a course about S. 15° W., crossing Aquia Creek about three-quarters of a mile above Aquia, and below the mouth of Beaverdam and Cannon Creek, and gradually turning more to the westward it passes within about a mile and a half northwest

of Stafford Courthouse; turning now more abruptly to S. 67° W., it crosses Potomac Creek about one mile west of Wallace's mill, arriving at its most western extremity. From this point it gradually rounds off through a southerly bearing into a course about S. 37° E., towards Fredericksburg, crossing the Rappahannock about one mile west of Falmouth; thence it curves again westward to about S. 30° W., so as to intersect the F. & O. R. R., about three miles from town, and passing along Hazel Run it crosses the same still further west, nearer its headwaters, forming another extreme western boundary. It now assumes a northern bearing, crossing Massaponax River about three and a half miles west of R., F. & P. R. R., and curving first east to form the southern margin of the formation, it crosses that railroad about one mile south of Massaponax River, running N. 60° E., nearly with the course of the river towards the Rappahannock, to a point below the mouth of Massaponax.

From here, crossing the Rappahannock, the eastern margin of the formation is formed in a nearly north course by the irregular boundaries of the Tertiary formation overlying it. About three and a half miles below Fredericksburg it crosses the road to Belle Plain, bearing more to the northeast to Potomac Creek, a little above the church, and bearing still more in that direction it crosses Accakeck Creek at Brook's mill. From here the course changes again to nearly due north, crossing Aquia Creek about half a mile below the mouth of Austin's Run; turning more to the eastward it crosses Meadow Branch a little above the mouth of Stillhouse Branch, and bearing still more northeast it is lost on the banks of the Potomac about one mile north of Meadow Branch. The balance of the eastern margin to the beginning is formed by the river banks.

Its greatest linear extent from Mount Vernon to the Massaponax is therefore a little over 40 miles, and its greatest width at Potomac Creek, or at the Massaponax River, about 8½ miles, comprising in all a superficial area of 174 square miles.

2. *The "Farmville" deposits* contain the two isolated basins upon the north and south side of the Appomattox at Farmville, in Cumberland and Prince Edward counties, known as the Farmville coal basin. One, the larger and most northern of them, has nearly the shape of a half moon, with its concave side eastward; the other, much smaller, has an elliptic shape, with the major axis bearing southwest. Farmville is situated just between them, the former stretching from the north bank of the Appomattox River nearly due

north in its main extension, the latter from the south side of the same river in a southwest course.

To trace the boundary of the main basin we commence in the fork of Buffalo Creek and Willis's River, as its most northern extremity. Bearing in a southwest direction it crosses the Ca Ira road about a mile and a half from Ca Ira, and east of Willis's Mountain, intersecting Great Willis's River about one mile east of Kurdsville, in Buckingham County, passing immediately east of Mrs. Hendrick's, and then taking a nearly due south direction to a point below Sandy Ford bridge, it bears southeasterly towards the mouth of Buffalo and Appomattox River, just on the edge of Farmville. Passing through the Bizarre estate in a northerly course, it crosses a westward road to Dry Creek, about one mile west of its intersection with the Forest road. Bearing again more to the northward it passes about three-quarters of a mile west of Raine's tavern, in Cumberland, to near the intersection of Little and Great Willis's rivers, thence in a nearly northeast course it extends west of Ca Ira about a quarter of a mile, crosses Raine's Creek near its mouth, and reaches the northern extremity mentioned in the beginning.

The whole length of the deposit measured on its curved axis would be about 13 miles, and being on an average about 2 miles wide, its area is computed to about 20.5 square miles.

The first small basin south of the Appomattox extends over the area from the river southwestwardly along the road from Hampden Sidney College to the river, to about half a mile north of King's tavern, its eastern boundary running nearly parallel with, and about half a mile east of Buffalo Creek, terminating again upon the Appomattox River, at the edge of Farmville. It is, in fact, but a part of the main tract north of the river, but nearly separated from it for a distance on its western boundary just above the junction of the Buffalo and Appomattox, by the exposure of the Eozoic rocks, from which the formation has been removed by denudation.

The length of this tract being about 3 miles by 1 mile wide, its area would be about 2.4 square miles.

About two miles further southwest, near Prince Edward's Courthouse, we approach the last of the basins, which is of an oval shape. Its northern margin is visible a short distance south of the courthouse. Its western boundary ranges from half to three-quarters of a mile east of the main road from Charlotte Courthouse to Farmville for about two miles to its southern terminus; the eastern boundary

being marked by the course of the Briery River, which flows along and sometimes a little within its margin.

Less than 2 miles in length and nearly 1 mile wide, its area would be about 1.6 square miles. All the Farmville basins together comprise, therefore, an area of about 24.5 square miles.

D. *The Western Division.*

In linear extent, as well as in superficial area, the western division is by far the most important. Extending in two large tracts from the Potomac River southwestward for 80 miles, and from the Dan River northeastward for 60 miles, with several exposures of the formation in the interval of 72 miles, it may be said that it can be traced, more or less, across the whole State of Virginia.

1. *The Potomac deposits* form the most northern part of this division. Commencing in the State of Maryland it extends from the north side of the Potomac above the falls through the counties of Fairfax, Loudoun, and Fauquier, to Robertson's River, in Culpepper. Its shape in Virginia is that of a prolonged, nearly equilateral triangle, with its base along the Potomac, its apex in the forks of Robertson's and Rapidan rivers, passing uninterruptedly through the counties named above. Beginning at its northwestern extremity about Noland's Ferry, and the mouth of Clark's Run upon the south bank of the Potomac, the western boundary extends along to the headwaters of Clark's Run and Limestone Creek, in a course nearly southwest. Following the east flanks of the Kittoctan Mountain it passes a little west of Leesburg, crossing Goose Creek at Oatland or Carter's mill, the A. & H. R. R. about a quarter of a mile east of Aldies, and extending along the base of Bull Run Mountain in nearly a uniform course, it crosses the Manassas Gap Railroad about a quarter of a mile east of the mill at the end of the Gap. It continues close to the eastern flanks of Pond Mountain and Baldwin's Ridge, crossing Cedar Run a little below Blower's Branch, about two and three-quarters miles east of Warrenton, whence it bears more southwestward towards the headwaters of Licking River, about a mile and a half west of Germantown and Fayetteville, crossing the Hedgman's River a little below Freeman's Ford, and Astham River above the mouth of Muddy Run. Passing a little west of Fairfax it intersects Cedar Run a little to the eastward, where it is crossed by the road leading from Fairfax to Orange Courthouse; bearing now a little more southwestward it terminates at its southern extremity at the mouth of Robertson's River, and the south fork of the Rapidan.

Tracing the eastern boundary from this point we have a variously interrupted exposure of the formation along the Rapidan River, for about three-quarters of a mile to Raccoon Ford. It now diverges from its former due east course, leaving also the river until it touches the Courthouse road, between half and three-quarters of a mile towards the south; it then bends a little northwards, curving around so as to strike the river about one mile above the mouth of Brook's Run, and crossing the Rapidan in a northeasterly direction, it passes Brook's Run a short distance above its mouth, intersecting the road leading from Germanna Ford to Stevensburg, at a point a little west of the fork near the meeting-house. Thence bending slightly towards the north it crosses Mountain Creek, about two miles above its mouth, and strikes the north fork of the Rappahannock a short distance above the mouth of Marsh Run. Now pursuing a course almost due northeast it strikes the head of Elk Run a short distance east of Hickerson's, at the cross-roads, and, turning rather more towards the north, passes west of Brentville, and east of New Market, so as to cross the O. & A. R. R., just west of Centreville. From this point, continuing in nearly the same direction, it intersects the A. & W. R. R. east of the headwaters of Salisbury Plain Run, about four and a half miles west of Fairfax Courthouse, the G. & L. R. R. at Drainsville, striking the Potomac River at a point about one or two miles below the mouth of Seneca Creek in Maryland. Of its prolongation into Maryland it may be stated, that while the western boundary keeps nearly the same course as the boundary in Virginia, about parallel with the Monocacy River to Frederick, Maryland, the eastern boundary, after passing across the Potomac, quickly bends around to the north, and then to the northwest, so as to pass over the Seneca, between the mouth of the Dry and Little Seneca, and to intersect the Little Monocacy some distance above its mouth, whence, turning to the north, afterwards the northeast, it crosses the Big Monocacy very obliquely, and shows itself on the B. & O. R. R. towards Frederick, and farther northeast, in a much-contracted area.

Its entire length, measured along the western boundary, from the northern extremity on the Potomac to its extreme southern point on Robertson's River is 74 miles, its width upon the Potomac (being the widest part) about 14½ miles, making the entire area of country covered by this formation about 651 square miles.

2. *The Barboursville deposits* is a small area, in Orange County, on the south side of the Rapidan, of an elliptical shape. It com-

mences at the Rapidan River, near the mouth of Baylor's Run, thence bearing to the southwest it passes a short distance east of the mill where the Orange Courthouse turnpike touches the river, and continues on a little westward of the meeting-house about one mile beyond Barboursville. From this point, the most southern extremity, it may be traced a little east of the headwaters of Blue Run, and running nearly parallel with, but east of that stream, passes the mill below Beaver Branch. Continuing in the same direction parallel to the west flank of the Southwest Mountain, it passes a little west of Montpelier, striking the road from Orange Courthouse to Stannardsville at the eastern crossing of Baylor's Run; by bearing a little northwest it terminates at the beginning.

About 9 miles long and 2 miles wide at its widest part, its area would be about 14 square miles.

3. *The James River deposits* contain several occurrences of the formation about Warminster, on both sides of James River, extending into Nelson, Buckingham, and Fluvanna counties. They are situated in the wide interval between Barboursville and those at Danville, to be traced below. They are less defined, and consist of more isolated narrow patches, stretching for about eighteen miles from the southwest corner of Fluvanna County, about the Hardware River, with a width of about five miles, to a distance of about one mile below Warminster on the James, where the formation is much narrower, showing exposures west of Scottsville, below the mouth of the Rockfish River, upon the north side, and higher up upon the south side of the same, and also below Warminster. Its area cannot yet be computed correctly, but would be about 40 to 45 square miles.

4. *The Danville deposits* extend from Falling River, in Campbell County, across the Staunton River, through Pittsylvania County, to the north side of the Dan River, just above Danville. Its shape is that of a long and narrow strip, wider at its southern than northern extremity, with an expansion in its contour along the western margin nearer the centre of the tract, extending to the headwaters of Stinking Creek.

Beginning at the northern extremity near the mouth of Rattlesnake Creek, in Campbell County, taking a southwest course, it crosses the road from Campbell Courthouse to Reid's Bridge on Falling River, about a mile and a half west of the bridge, crosses Molley's Creek, at the lower mill, and continuing in a nearly straight southwest course, crosses Staunton River, a short distance above the upper end of Long Island. Bearing now more westward

to Chalk Level, it passes near the main road to Lynchburg at George's Creek. Thence in a southeasterly and afterwards nearly southerly direction, it passes one mile east of the White Thorn Tavern at the creek of the same name to within two miles east of Competition, and taking now a westerly turn crosses Cherrystone Creek about two and a half miles above its mouth, and the Bannister River about one mile east of the mouth of White Oak Creek. From here it follows the western flank of the White Oak Mountain, passing about one mile east of Chesnut & Fitzgerald's store, and crossing Sandy River about one mile east of Dalla's Bridge arrives at the southern extremity of the line at the end of White Oak Mountain. Here it is inflected by the mountain, and passes round its southern edge in an easterly direction to a point about a mile and a quarter north of Bachelor's Hall, and continues on to within three-quarters of a mile of Dan River, and within about two miles of Danville.

It now assumes a northeasterly course nearly parallel with its western boundary, and intersects the road from Danville to Pleasant Gap, in the White Oak Mountain, about five and a half miles north of Danville; crossing Sandy Creek near the road to Charlotte Courthouse and the headwaters of Shockoe Creek it passes within half a mile west of Riceville. From here its eastern boundary is almost a straight line across the Staunton River, about half a mile below Pannel's Bridge, in a general course N. 30° E., almost parallel with its western boundary to the west of Nowlans, and after passing about three-quarters of a mile east of Reid's Bridge it curves gently round to the beginning. Its extreme length northeast and southwest is 54 miles, its greatest width at Brushy Mountain 8 miles, but its average width will not exceed more than 4 to 4½ miles. The area of the formation thus delineated may therefore be computed to be from 260 to 272 square miles.

5. *The Dan River deposits* comprise the small portion of the tract a little west of the former at Smith's River, passing across the Dan River into the State of North Carolina, and known there as the Dan River coal basin. Its whole extent is about 40 miles long, of which only about 8 miles, the extreme northern end, is situated in Virginia, the balance being in the counties of Rockingham and Stokes, in the general direction from Leaksville to Germantown. The width of the basin varies from four to seven miles.

The outline of the portion in Virginia may be traced by beginning at the State line about one mile east of Cascade Creek, passing northeast in a course nearly parallel with the creek to a point

a little east of the village of Cascade, thence turning westward so as to cross the creek about five miles from the State line, and sweeping around to a southwesterly direction, intersecting Smith's River near the State line in its western boundary. The area of this small portion may be about 14 square miles. The whole area of the Mesozoic formation, as existing and distinctly traced out in Virginia, amounts, according to the areas given, to 1495 square miles. But including the tracts at Hicksford and James River, it will amount to over 1500 square miles. Of this, over 1150 square miles would be comprised in the western, and over 345 square miles in the eastern localities; 329 square miles occur immediately along and ultimately overlaid by the Tertiary, and 1166 square miles in the isolated tracts surrounded entirely by Eozoic rocks.

II. Description of the Rocks constituting the Formation.

The principal rocks constituting the formation are sandstones and slates of various grades and colors; occasionally conglomerates and limestones, shales or fireclays, and seams of bituminous coal, as well as a number of accessory minerals and igneous rocks are met with. The latter are occasionally found to have penetrated the series of sedimentary rocks, which display a great variety of color, texture, and solidity in rapidly changing strata.

1. *Conglomerates.*—With the exception of the occasional occurrence of rather coarse sandstones, the conglomerates are apparently very few in number. One occupies the lowest position in the series, and therefore forms the bottom of the basins, although its outcrop is not always perceptible. It consists of large pebbles of quartz, granite, and other crystalline rocks, such as epidote, also gneiss and hornblendic rocks, and the Eozoic slates, which formed the borders of the valleys in which the deposition occurred. Even the rocks of the Blue Ridge have given their contingent at some of the localities. The boulders vary much in size. No doubt, from vestiges found at the surface, they sometimes attain very large dimensions, while pieces of the size of a nut and egg are quite common. The cementing mass varies from a silicious to a highly calcareous and argillaceous material, but in many instances must be of a very friable nature; highly ferruginous cements are also found, particularly in the upper strata of the series. Again, as in the Potomac marble, the pebbles are largely of a calcareous character, differing in that respect materially in various portions of the State.

The color of the conglomerates must consequently differ greatly. Gray and greenish-gray shades, or brown and ochreous tints are the most frequent. The large boulders of granite and other crystalline rocks being set free from their cement by decomposition, occur close up to the Eozoic base rocks, and may sometimes be confounded with them.

2. *Sandstones.*—These rocks are represented by a great number of varieties. In general they are either of a gritty silicious or of a friable argillaceous character. The former furnish a tolerably firm, and occasionally even a good material for building.

a. Psephites—silicious and feldspathic sandstones. Most of them are entirely composed of quartz and feldspar, the larger grains not exceeding generally the size of peas, and diminishing to fine particles of sand. In many instances it is the perfect *arkose*, or feldspathic sandstone, in others, of rarer occurrence, the silicious material (in appearance almost a quartzite) predominates. This is particularly the case in the lowest strata of the formation. Mica, principally muscovite, in small silvery scales, occurs not unfrequently.

The quartz is either milky, smoky, or of a bluish-gray opal color; it is also frequently colorless. The feldspar is principally white, or light gray, and often decomposed into kaolin. Most of these sandstones, particularly those in which the decomposition of the feldspar has not progressed so far, effervesce strongly with acids, showing the presence of carbonate of lime, indicating probably the presence of various varieties of feldspar as, for instance, labradorite. It is a remarkable fact, at least in the Richmond deposits, that while in the upper strata of the formation *only* the white or gray-colored feldspar occur, from a certain horizon lower down the flesh-colored orthoclase begins to make its appearance.

The consistency of the sandstones is more or less hard and durable; according to the condition of the feldspar, some of them presenting a hard and good building material, others decaying fast by exposure.

The colors of these sandstones are generally white, light-gray, and buff. In the eastern range these colors predominate in the upper strata. In the lower, some red-colored sandstones of a ferruginous character are found to exist in more or less thick strata. Particles of specular iron ore may be detected in them, while the coloring matter consists of the hydrous oxide of iron.

In the western deposits, the red-colored sandstones are far more

frequent, indicating in each instance whence the material has been derived to form the secondary deposits.

Occasionally very dark gray sandstones of the psephitic description occur, which by all indications must have undergone a considerable change through igneous action. They are distinctly but very closely grained, containing also crystals of feldspar, generally of a highly vitreous appearance, imbedded in a silicious and apparently vitrified aluminous paste. Even the impressions and carbonized remains of vegetables are noticed in it. The rock has frequently a great degree of tenacity, and at first sight has a close resemblance to some of the porphyritic rocks. They are frequently met with at disturbed locations, near the saddles or anticlinals.

Very few indications of organic remains are met with in the psephites beyond some small carbonized vegetable particles of the nature of mineral charcoal. Some few strata, generally more porous, are either of a light color, with yellowish-green spots, or of a uniform dark brownish-green tint. They contain *mineral oil*, which may be readily perceived by its smell, when the impregnation is strong, or occasionally even by drops of oil collected in small caverns of the more porous rock; they also have the greasy appearance and feel. When the oiliness is not marked it can still be perceived by moistening with some liquid, which will not soak into the pores, as in other rocks, but accumulate as a fixed globule. In stronger oil-rocks water is sufficient, in the weaker a drop of acid is preferable. The drop of water or acid let fall upon the rock, from the point of a glass rod, will remain for a shorter or longer time, as a perfect globule on oily rocks, while on non-oleiferous rocks it will be soaked up immediately. There are various strata of oil-rocks at certain fixed horizons in the formation. So far, their only practical value will be as a landmark for the seams of coal.

b. Psammites. This subdivision of sandstones is also largely represented in the formation, particularly in the western localities. They are largely composed of argillaceous matter in which fine silicious sand, and, but sparingly, larger grains of quartz, and even feldspar, are found more or less regularly disseminated. Mica, principally in the fine silvery scales of muscovite, but sometimes the black variety, or biotite, is found invariably in them, sometimes so largely as to form micaceous psammites, which being generally finely laminated, appear as micaceous slates. Chloritic minerals also sometimes take part in their composition. The principal colors of

these sandstones are again various shades of rather dark gray, greenish and yellowish gray, red and buff. When they contain much carbonaceous matter, which is frequently the case, they are dark gray and grayish-black.

While the psephites are most frequently calcareous, the psammites show an almost entire absence of calcareous matter. They are also non-oleiferous. They show more indications of organic remains, particularly of vegetable origin, as the remains of casts of trunks of trees, the impressions of reeds and leaves, which are occasionally converted into coal, lignite or mineral charcoal, in the carbonaceous rocks.

3. *Slates and Shales.* The argillaceous sandstones are gradually passing into real argillaceous or micaceous slates by the degradation of their materials into the finest particles. Some are entirely free of grit, passing into vitrified clay, shale, or fireclay. Some of them retain a tolerably firm laminated structure, which in some instances may be carried to a great degree of divisibility. But they are, nevertheless, unfit for slating, being too much affected by the weather. In other instances, the slates fall into thin angular fragments soon after being exposed to the air. The shales of a very fine texture are characterized by soon falling into irregular fragments, and by decomposing readily into a good clay for ceramic purposes. The color of the slates is variously gray, greenish, and bluish-gray, dark drab, brown, and nearly black; in the western districts, red shales are also found. The shales are generally of light-gray or ash-color.

Some of the dark-brown and black slates contain considerable carbonaceous and bituminous matter, and some would yield a large quantity of illuminating material. Some of them when cut by the knife appear almost like brown coal, or the impure qualities of the Kanawha cannel.

Iron pyrites, in a finely divided state, as well as in concretions and large crystals, is frequently met with in the black and brown slates; also carbonate of lime in concretions, some of fibrous texture, and some in scales and small seed-like grains; the remains of a species of *Cythere* occur in some of the strata.

In regard to the organic remains the slates, and particularly the black slates, offer the greatest treasury amongst all the rocks. The impressions of whole fish, multitudes of scales, small bones, and saurian teeth, two species of *Estheria*, *Cythere*, reeds and stems of *Equiseta* and *Calamites*, and also, but more rarely, various leaves

occur, principally in the smooth, divisible, most argillaceous, but also most fragile, slates. In consequence of the bituminous and pyritical nature of the same, they possess in a high degree the property for spontaneous combustion (*Brandschiefer*).

4. *Limestones.* They are confined to a few distinct strata of considerable thickness. But they occur not unfrequently in the form of scales and crystals of calcites, in streaks, seams and concretions of more or less magnitude and in spherical or lensiform shapes.

They are generally of a close texture or arenaceous, but occur also as fibrous and crystallized calcite. The color is principally light or dark gray, brownish, or ash-color. A notable quantity of carbonate of iron is found in some of the limestones, but not in sufficient quantity to make it a carbonaceous iron ore. Upon some of the slabs of limestone perfect crystals of gypsum and iron pyrites are found in considerable profusion.

5. *Coal.* The coal which occurs in this formation is mostly of a highly bituminous character, and must be classed amongst the caking and gas coals, both of which qualities it possesses in a very high degree. Still at certain localities a less bituminous and even non-bituminous coal, carbonite, semi-anthracite, and natural coke are met with.

Physical Characters of the Coals.

a. Bituminous Coal. It is highly laminated, bright black jet, highly resinous, thick laminæ, generally in thick layers, alternating with dull black laminæ of less dimensions. On the fresh fracture, which is more or less conchoidal, it is jet black; lustre resinous, splendent; it splits readily parallel to its stratifications, which are strongly marked by the appearance on the surface of the dull variety mentioned above in a thin film. Its specific gravity, according to Professors O. P. Hubbard and B. Silliman, is 1.292; according to Professor Johnson, specific gravity, 1.246, and the weight of one cubic yard, 2075 lbs.

It contains, on the average, from 30 to 38.5 per cent. of volatile matter; 59 to 66 per cent. of fixed carbon; 2 to 10.8 (average of twenty-one analyses, 5.58) per cent. of ash, and 0.6 to 1.7 per cent. of sulphur.

b. Carbonite. The true carbonite is probably only a semi-bituminous coal, generally with a large amount of earthy impurities.

In appearance it is of a dark iron-gray or grayish-black color, dull, or semi-metallic lustre, compact and even very tough, but not

hard to cut. Hardness, = 2.5. Specific gravity, = 1.323 (Professor Johnson).

It contains about 11 per cent. of volatile (scarcely bituminous) matter, 80 per cent. of fixed carbon, and from 9 to 22 per cent. of ash, also considerable sulphuret of iron.

In certain instances it has the property of decrepitating very badly. Slickensides are not unfrequently noticed upon it.

c. Natural Coke. The true natural coke, although the carbonite is also generally termed natural coke, differs materially in aspect from the preceding.

It is of a dark iron-black color, of more metallic lustre, porous, and has, in general, more the aspect of an artificial coke than the former. It is found at such places where igneous rocks influenced the bituminous coal and deprived it of its bitumen.

d. Semi-anthracite. Under the same conditions as the former a volatilization of bituminous matter has taken place, producing in some cases an anthracitic coal, which much resembles the true anthracite, particularly in the Dan River deposits. It is hard, of iron-black color, submetallic lustre, and conchoidal fracture.

6. *Igneous Rocks.* Penetrating the sedimentary rocks, igneous rocks are occasionally met with in the form of dikes. They are generally dolorite, but in some instances euphotide (feldspar-euphotide, containing sphærosiderite and fluorspar in crystals and epidote-euphotide). The former are generally dark gray or greenish-black, the latter light gray or yellowish-gray, very compact, hard, and crypto-crystalline. Amygdaloids are also found with their cavities filled by epidote, quartz, and chalcedony.

7. *Accessory Minerals.* Among the occurring minerals but few can be noticed, none being of any importance in a practical point of view. *Malachite, Libethenite,* and *Copper Pyrites* are sometimes met with as thin incrustations between the strata of the sedimentary rocks; also some of the fossil remains are incrusted by them.

Gypsum. This mineral is found in the coal mines of the James River basin, in a profusion of well-formed crystals upon the surface of limestone strata. The crystals lie flat upon the joints of the slabs, and in some instances, where space admits, they stand in erect positions, but inclining at the angle to the main axes, leaving the distinct tracing of the section of the crystal as a print upon the surface of the limestone when detached from it.

Iron Pyrites. It occurs as the cubic pyrites and marcasite in well-defined crystals, also finely disseminated through the slates and upon

the stratification planes of the coal. It also occurs in spherical masses of more or less magnitude, termed "sulphur balls."

Carbonate of Iron. Among the calcareous concretions and small limestone strata, we may notice some which contain notable quantities of carbonate of iron. They are of a dark grayish-black color, compact in texture and of an earthy appearance, differing by nothing else apparently from the other calcareous concretions except their greater weight. Samples have yielded as much as fifteen per cent. of peroxide of iron.

III. General Geological and Stratigraphical Characters of the Formation.

It has been already stated that the sedimentary deposits participating in this formation, when exhibited upon a topographical map, appear either as isolated basins or unconnected strips, passing in the latter instance below the Tertiary formation, which in this state immediately succeeds the Triassic deposits of the Mesozoic formation. But by a closer examination regarding the present topography of the country, some interesting deductions may be drawn, which by proper interpretation may have considerable practical value.

Assuming an imaginary line parallel to the course of the Blue Ridge Mountain in this State, which in its main bearing will be from N. 35° to 48° E., not taking in consideration the deflected portion of the southeastern extremity, we will find the axis of the isolated patches of more or less magnitude, to conform to two double ranges, two eastern and two western, which have been termed respectively the Eastern, Middle-eastern, Middle-western and Western deposits (see Map, Plate V). Proceeding from the southern extremity we will notice that the extreme northern parts of three of the divisions, namely, the Eastern, Middle-eastern, and Middle-western, underlie in their eastern extension the Tertiary strata in this State, which formation is fully distinguished by its different stratigraphical, lithological, and palæontological characters, while the Mesozoic formation itself rests upon Eozoic rocks, the precise age of which has not yet been defined in all instances. The southern extremities on the contrary, as well as the entire western range, rest also entirely upon the Eozoic rocks, but are mostly deprived of their incumbent Tertiary strata, most of the covering being Quaternary deposits. Within the lines of bearing of the different ranges we find considerable intervals, where even the Mesozoic formation has partially disappeared.

The question of interest would be to ascertain if a former connection of all the separate deposits did exist, and if their present positions warrant such a supposition.

In the absence of a full series of altitude observations, we will depend principally upon the natural system of drainage, as now noticed upon the map, to ascertain the summits and general declinations in the State, with such numerical data as have been collected to test the point in question.

On a general view of the map we will notice three main channels of drainage in that part of the State east of the Blue Ridge. In the southwestern extremity of the State we have the most southern channel, formed by the Dan and Staunton rivers, with all their tributaries, flowing east or southeast to form the Roanoke, and passing thus through the Albemarle Sound into the Atlantic. The elevation of the headwaters of those streams along the Alleghany, or rather eastern base of the Blue Ridge Mountain, is about 900 feet at the passage of the Roanoke or Staunton River. Its extreme northern summit will be, about the base of the Peaks of Otter, over 1000 feet above tide, Liberty being 947 feet.

In the central part of the State we have the James River channel, with its tributary rivers as far north as the headwaters of the Rivanna. The elevation of the James River at Balcony Falls is 706 feet, at Lynchburg 513, Scottsville 275, Columbia 205, Dover 145, and Richmond 30 feet. With its southern summit at the former base of the Peaks of Otter, its northern summit will be at the headwaters of Swift Run, south of Swift Run Gap, probably over 900 feet, this being the elevation at Rockfish Gap, southwest of it. The direction of the James River from Balcony Falls, at the foot of the Blue Ridge, to Lynchburg, is about southeast, but takes at this point an abrupt turn at right angles into a direct northeast course for about 40 miles, then resumes its southeast course to Richmond. Along this line of northeastern direction a summit is distinctly visible, at Concord, 833 feet, and Appomattox Courthouse, 835 feet, dividing the waters of the Appomattox from those of the southern line of drainage on the south side of the James River, and a similar summit between Fredericksburg, 48 feet, and Gordonsville, 498 feet, turning the waters of the South Anna, North Anna, and Mattapony rivers respectively, with those of the James River and its tributaries, into the Chesapeake Bay. All those streams have a more or less southeast course. The most northern line of drainage is effected by the Potomac River. At an elevation at Harper's Ferry of 205 feet, it

takes up all the waters north of Manassas Gap to the Potomac. The headwaters between Manassas Gap and Swift Run Gap run, in part, in a southeasterly course directly into Chesapeake Bay, through the Rappahannock and its tributaries, the Robertson, Hazel, and Hedgman rivers; another portion running likewise in a southeast direction discharges through the Occoquan River into the Potomac; while a third portion, running northeasterly, reaches the Potomac, and ultimately the Chesapeake, through the Kittoctan, Goose, Broad Run, and Difficult creeks.

Let us now observe the position of the various tracts covered by the Mesozoic formation (see Fig. III, Plate VI), and also notice a few items in regard to the Eozoic rocks upon which the former were deposited. Passing up the James River from Richmond to Scottsville, the average course of which, N. 67° W., coincides tolerably well with the dip of the strata, we have a fair sectional view. At and beyond Richmond we notice the prevailing southeast dip in the granitic rocks, probably in part Laurentian. The Mesozoic formation, with a similar but by far less steep dip, reposes upon the same again, being covered by the Tertiary sands, clays, and gravel-beds conformably. About seven miles west of Richmond the first change in the dip occurs, marking an anticlinal in the older rocks. The northwest dip now continues until the Mesozoic rocks belonging to the Richmond deposits are reached, reposing upon the older rocks also with a westward dip, but generally not conformably, the older rocks having again the greater pitch. Passing over them for nearly six miles, we come to the western edge of the same formation, but now assuming the southeast dip, as also noticed in the Eozoic rocks, until about seven and a half miles, between Little Beaverdam and Beaverdam Creek, and again six miles farther west, at Little Lickinghole Creek, we pass two anticlinal axes in the Eozoic rocks, consisting mostly of gneiss, mica, and hornblende slates. The western dip continues to Byrd Creek, about forty miles (in a direct line) west of Richmond, where the strata are almost perpendicular; reclining now again to a steep southeast dip, they continue so beyond the Rivanna River at Columbia, Scottsville, and Carter's Mountain, a high mountain ridge northwest of the river. The last remarkable ridge is then west of Charlottesville, through the country called North and South Garden, Butler, and Ragged Mountain, which shows several pronounced anticlinal wrinkles at considerable heights above the general elevation of the country. If we continue along the banks of the James River, after its remarkable turn, previously noted, to-

wards Lynchburg, we notice again, in the section of country southeast of the river and west of Maysville and Slate River, the continuation of the anticlinal, rather more distinctly marked, existing along the James River.

The position of the first anticlinal is west of Richmond Falls, therefore, between the Eastern and Middle-eastern deposits; the second (two) between the Middle-eastern and Middle-western; the third nearly in the line or slightly east of the Western deposits, and evidently the most marked along the James River in its northeastern deviation below Lynchburg, in the great gap between the two principal Western deposits; the fourth and last is west of the Mesozoic deposit, at least as far as developed, and about in the line of Bull Run and Kittoctan Mountain. It is, therefore, not unreasonable, reflecting upon all points enumerated, to suppose the following former connections.

The most southern and eastern exposures on Meherrin River at Hicksford, and west of it, as well as those at Petersburg, Richmond, South Anna River, Fredericksburg, and Mount Vernon, may be designated as the remaining parts of the former principal border line of the Mesozoic sea along the Atlantic. From the Taylorsville deposits (South Anna River), Middle-eastern division, an estuary or former valley extended in the direction of the Deep Run and Richmond basin, in a southwest course, even as far as North and South Carolina, including the Deep River coal basin.

Another extended from the Aquia deposits (Fredericksburg), Middle-western division, in a similar direction as the former, as far south as the Farmville basins.

The last and most extensive of the estuaries extended from Maryland across the Potomac River entirely through the State of Virginia, terminating in the State of North Carolina, at the Dan River basins.

The formations along the Potomac, and at Fredericksburg, Richmond, Petersburg, etc., expose rocks, which according to localities further south of it appear to belong to a geological horizon higher up in this series, while in their respective altitudes they assume a level even below that of the surface at the Richmond and Farmville basins, which unquestionably represent the lowest rocks in the series. They have also a more gentle dip to the southeast, and are capped by the Tertiary rocks directly. At Mount Vernon they are lost in their passage across the Potomac. No other Mesozoic rocks have been as yet developed in the States north of Virginia along the At-

lantic, which exhibit a decided permanent southeast dip for a long line of bearing until we reach Connecticut and Massachusetts. No positive connection can be proved to exist between these extreme points, but from observations by soundings, a map, prepared by the Coast Survey along the coast of New Jersey and Staten Island, indicates that the position of the beds on the Atlantic border on this part of the continent was nearly at its present level, and therefore, dry land stretched farther to the eastward than now, and that seashore deposits were formed which are now submerged (Man. of Geol., by J. D. Dana, p. 423). If we assume a steep escarpment of the Eozoic rocks along that part of the former coast line, depositions of Mesozoic rocks could have been formed along this escarpment until the level of the same was reached and the former outcrop, which butted against it, was ultimately covered by more recent depositions, as in Maryland and New Jersey, hiding the continuation of the extreme points of the formation below the sea-level. Upon a small scale such is the case in some parts of the Richmond coal basin, where the rocks below the coal and the coal strata themselves do not appear upon the surface, but butt against the Eozoic rocks forming the base of the trough, while at other points they lap farther out, over 1500 feet, showing the outcrop of the coal that much farther (apparently) inside the basin. Such a supposition would, therefore, indicate the connection of the border line of the Mesozoic rocks of Virginia, including the two estuaries of the Middle-eastern and Middle-western division.

The Western division shows a continuation from the Potomac through Maryland, Pennsylvania, and New Jersey to the Hudson River, uninterruptedly. Throughout New Jersey, and particularly along the Hudson River (the most eastern part of that section), and again in Connecticut, on the western part of those Mesozoic rocks, heavy outbursts of trap rocks are known to exist. May not then the gap in the formation along the Hudson River at West Chester have been formed by causes similar to those forming the gap through which the James River now passes, destroying the former connection between the two great areas?

The destruction of a connection formerly existing between all the Mesozoic depositions along the Atlantic States might, therefore, be attributed to a slow and unequal rising of the Eozoic rocks after the deposition of the former upon the uneven floor of the latter, noticed in the anticlinals of the latter, and producing an unequal denudation of the Mesozoic deposits. The rising of these older rocks upon one

side may also have produced subsequent partial depressions of the section along the Atlantic.

The elevation, now exhibited by the summits southwest and northeast of the James River, exposed the central part of that long western basin more to the denuding action of the atmosphere, leaving only the vestiges in the small patches along the James River.

The anticlinals exhibited in the elevations along the tablelands of the James River, at Buffalo and Slate rivers, divided the Middle-western deposits, and the denudating forces have acted most forcibly at the southern extremity, where an entire new line of drainage, strongly southeast, was created; consequently but little of the formation remains, particularly south of Farmville. It appears that similar summits are indicated north of the Potomac, at New Market, Westminster, and Strassburg, Maryland, and across the Susquehanna above Castleton, to Pennington, Waynesburg, and Norristown, all southeast of the great western belt of the Mesozoic.

Denudations are less noticed in the arm of the Mesozoic extending from the South Anna to the Appomattox, until we pass south of the latter. Although less perceptible, the summits are noticed to exist between Keysville and Burksville (527 feet), west of the deposits, at Swift Creek east, and at Blacks and Whites (A., M. & O. R. R.) south of the belt. The most remarkable summit in that direction exists near Oxford, in Granville County, North Carolina, dividing the northern part of that arm from its southern extension into Granville, Chatham, and Moore counties (Geol. Rep. of North Carolina, 1856, E. Emmons). Along the most eastern belt from Richmond to the Roanoke River, the courses of all the rivers are nearly the same, due east or slightly southeast. A regular denudation at intervals, according to the individual depressions of the various watercourses, may account for the now disconnected patches remaining along the borders of the Tertiary, but would indicate the continuity of the Mesozoic below in its original linear extent.

The frequent occurrence of trap rocks throughout the Mesozoic, particularly noticeable at such points where considerable stratigraphical and metamorphic changes in the sedimentary rocks have occurred, as for example in the Dan River belt; at the Rapidan River, and southwest of it; at Warrenton, and the western boundary along the Bull Run and Kittoctan Mountain, and across the Potomac deposits at Leesburg; along the eastern border of the Richmond deposits, north and south; about the James River, at Hall's mill, at the more southern portion; also in the Deep River deposits of North

Carolina; but principally at the northern extremity in New Jersey, Connecticut, and Massachusetts, gives rise to the hypothesis of a gradual elevation of the older rock floor. The time must have been between the close of the Mesozoic and the beginning of the Tertiary, since the latter, and probably even the upper part of the Mesozoic along the former shore, has not been affected by the penetration of the trap rocks. In many instances in Virginia, the influence is only noticed upon the sedimentary deposits, while the trap itself is often invisible, not having risen to the surface, but produced saddle-shaped flexures.

In regard to the superposition of the strata composing the formation, it is rather difficult to obtain complete series in sectional views in consequence of the topography of the country, the similarity of the material composing the formation, and the extreme scarcity of characteristic accessories and fossil remains.

The predominating rocks are sandstones of various grades, slates, and shales, occasionally, also, conglomerates of a coarse character. The limestones exist in very small proportion in the series, and in consequence offer the best landmarks. Similarity in appearance of related species of rock, and rapid changes in the various stratifications of the most heterogeneous materials are frequently noticed. Almost white sandstones of the arkose species alternate in small strata with those of a gray or darker color, and again with the finest bituminous black shale of the softest character. It is also noticed that the material constituting the rocks differs according to the nearest source from which it was derived. This may furnish additional proof of the isolated position each estuary occupied at the time of deposition, receiving in all instances its materials directly from the nearest Eozoic or Silurian rocks, in which the troughs were carved out previous to the deposition of the Mesozoic. Accordingly, we notice the difference in the material of the more brownish-tinged, ferruginous sandstones and shales in the western or extreme southern parts, which derived their materials from the older slates and schists, including ferruginous materials in deposits and as accessory minerals. In the eastern basins, the predominating lighter-colored granites furnished the principal material, and produced the predominating arkose or feldspathic sandstones in those deposits.

Very little has been done in the last thirty-eight years to develop the geology of the State of Virginia, since the arduous labors of Prof. W. B. Rogers were abruptly terminated by the legislature in 1840. While all the other States in this country have commenced,

or at various times continued and revised geological surveys, we may have to wait in patience until the next century for the accomplishment of this important work by State appropriations, and must, in the meantime, look to private observations. Having had the opportunity recently of exposing to ocular examination, through the deep borings with the diamond drill, and the sinking of shafts, at least a large portion of the formation, for the purpose of establishing the existence and further continuity of the coal deposits in the Richmond coal basin, the results of the same will be first given to form a true basis of comparison hereafter, and they are of especial value, as such extensive explorations may not be made again at an early day. The results are carefully computed from a number of borings near the granite for over 1.1 mile upon the line of dip, from 80 to 1142 feet deep, and also from the section of two shafts, 640 and 1338 feet deep (including 322 feet of borehole at bottom of deepest shaft). The whole explorations extended over an area of two square miles, and are verified at the various points.

The results obtained, demonstrated in the 1518 feet of section passed perpendicularly (see Fig. II, Plate VI), justify the conclusions that from the granite base upwards at least seven divisions may be distinctly noticed. They consist of:

I. *Boulder formation*, 36 feet, resting upon a coarse-grained, hard granite, resembling the red Scotch granite, composed of gray quartz, red feldspar (orthoclase), and a little black mica. Seams of satinspar penetrate the granite in various directions. Spathic iron ore, in small crystals, and fluorspar are found in the base rock.

Character of the Strata.—Hard, but principally soft ferruginous sandstones, containing much *red feldspar*, black mica, chloritic minerals (altered), and iron pyrites. Lower down, boulders of granite and quartz. Granite boulders of the same material as the basin floor, but altered by atmospheric exposures, imbedded in a ferruginous, highly calcareous cement.

II. *Lower sandstone group*, 251 feet.

Character of the Strata.—The larger portion (71½ per cent.) consists of *sandstones*, grayish-white or gray and reddish-gray, feldspathic, feldspar occasionally red, also black mica. Upper strata more frequently coarse, and in smaller benches in frequent alternations. Occasionally brownish-tinged and carbonaceous sandstones, the former in the lower strata, very slightly coherent, containing sometimes specks of specular iron ore. The sandstones are less calcareous, only about 57 per cent., except in the lower part of the group,

which is more calcareous. They contain obscure carbonized vegetable remains, and in one instance the fragments of a small tooth of a saurian were found. Two oleiferous strata occur near the central part of the group.

Slates, only 28½ per cent. of the group, are mostly black or brownish-black, some highly bituminous, also less calcareous (43 per cent. not calcareous at all), mostly fossiliferous, containing obscure vegetable impressions; occasionally a *Calamite*, *Cythere*, and *Estheria*, scales of fish (*Dictyopyge*), particles of saurian teeth, and small coprolites occur near the lower portion of slates. *Limestone*, in thin sheets, in the slate, and as concretions, also in small seams, is found; the former in the upper part, the latter nearer the bottom of the group.

III. *Lower calciferous group*, 245 feet.

Character of the Strata.—The largest portion of the group, 72 per cent., consists of *sandstones*, more or less feldspathic; about 29 per cent. of it consists of the lighter arkose, the balance is argillaceous, schistose, carbonaceous, or of various shades of gray. The larger portion, about 61 per cent., is calcareous; some 4 or 5 benches are rather coarse, and a few fossiliferous, containing obscure vegetable impressions and *Calamites*. Near the top of the group a brownish-gray sandstone occurs, very strong in oil, about two to three feet thick.

The *slates*, 27 per cent. of the group, are generally dark gray and brownish-gray, bituminous, and also black. Ash-colored shales and fireclay are also found, particularly near the top of the group; fully half of the slates are calcareous, containing concretions and streaks of carbonate of lime. At the bottom of the group they are also pyritiferous, containing *Estheria* and fish-scales (*Dictyopyge*), which is also the case near the top of the group, where impressions of long vegetable stems and coprolites are found. The limestones occur principally in four divisions, either in concretions or in strata of arenaceous gray limestone, attaining sometimes the thickness of from one to three feet, but generally interstratified with other rocks. The first is about 16 feet from bottom of group, the next two respectively 60 feet and 75 feet above.

IV. *Carbonaceous group*, 150 feet.

Character of the Strata.—The larger portion of the group, 59 per cent., consists of *sandstones*. About half of them are light-colored, feldspathic, arkose, but generally contain blotches of gray and black slate. The other half are of gray, or even black color, argillaceous,

schistose, and frequently carbonaceous. At the top and bottom of the group a coarse feldspathic sandstone will generally be noticed. The argillaceous and carbonaceous sandstones are fossiliferous.

The *slates*, about 19 per cent., are generally more or less dark-drab-colored, except at the top of the group, and at the partings of the coal seams, where black slates predominate. They are fossiliferous and pyritiferous.

Three distinct coal seams exist in this group, about 22 per cent., but they are not always present throughout the formation as such, deteriorating often into highly bituminous slates. They are also sometimes split, forming more than three seams.

In the upper twenty or twenty-five feet of the group, *Tæniopteris*, *Equisetum*, and carbonaceous stems are found, and also *Cythere* and *Estheria*. In the coal slates only *Equiseta* and *Calamites* are noticed.

The first coal seam is at 566 feet from the granite floor, 3½ to 5 feet thick; the second coal seam, at 599 feet from the granite floor, 1 foot thick; and the third coal seam, at 618 feet from the granite floor, 20 to 50 feet thick, but sometimes split into two seams.

Near the top, as well as near the bottom of the group, oleiferous sandstones are generally found. Except at the top of the group, where limestone is sometimes found, but which probably belongs rather to the next group, it is perfectly void of calciferous rocks. Sometimes a little carbonate of lime, in scales and crystals, is found in the coal, generally at disturbed points, saddles, etc.

V. *Oleiferous group*, 191 feet.

Character of the Strata.—To a great extent it consists of sandstones, 64 per cent. of it, in heavy strata, mostly nearly white or light gray arkose, and sometimes tolerably coarse; also schistose sandstones with slaty partings occur. About one-half of the sandstones are slightly calcareous.

The most characteristic feature is the occurrence of *oil rocks*, generally three, greenish-spotted, feldspathic sandstones in the upper, middle, and lower part of the series. The *slates*, 36 per cent., are mostly black and greenish-gray; nearly all of them are calcareous, containing also concretions and benches of limestone, as also concretions of sulphuret of iron (sulphur balls, as they are called). At 708 to 730 feet from the granite, a black slate containing fish-scales (*Tetragonolepis*), *Cythere*, and *Estheria*, and six inches of gray limestone, containing crystals of gypsum and iron pyrites, is very permanent, fairly exposed at all points, and generally over or near a very coarse arkose. While the sandstones are free of fossils the slates are

rich in *Calamites* and other vegetable impressions, fish-scales of *Tetragonolepis* and *Dictyopyge*, *Cythere*, and *Estheria*.

VI. *Upper calciferous group*, 334 feet.

Character of the Strata.—They consist to a great extent of sandstones (57 per cent.), generally light gray, feldspathic, arkose, principally fine-grained; about 30 per cent. of them calcareous. Three coarse sandstones occur at 958, 1081, and 1193 feet from the granite; in the last mentioned *Calamites* occur.

Slates (42 per cent.) principally dark gray and black, about 50 per cent. of them calcareous, containing small seams and concretions of limestone; towards the bottom of the group also gypsum and iron pyrites. *Calamites*, slender vegetable stems, fish-scales, principally *Dictyopyge*, and *Estheria* occur in the slates.

The upper half of the group is characterized by thick strata of slate and fewer sandstones, and by the occurrence of *Calamites*. The lower half contains more sandstones and a large number of small benches of slate containing *Calamites* and slender stems, but particularly fish-scales, *Estheria*, and also most of the limestones. The latter occur principally in two distinct beds, from 6 inches to nearly 4 feet. The last is the most regular, and is of brownish-gray color; the first is associated with fossiliferous slates, about 984 and 1079 feet above the granite floor.

VII. *Upper sandstone group*, 291 feet, as far as exposed by the geological column of this section. The extreme western point of this section is yet two and a quarter miles from the centre of the basin. Consequently the upper sandstone group, or any subdivisions in it, could gain a thickness of 1500 to 2000 feet, which has not yet been settled by positive facts.

Character of the Strata.—Principally sandstones, 80 per cent. of what has been exposed; buff-colored at top, but mostly fine-grained gray, argillaceous, and light-gray feldspathic (arkose); most of them are non-calcareous and coarser near the top of the section, containing at the bottom of group the remains of *Calamites*.

Slates, about 20 per cent., generally light gray or ash color, non-calcareous, except a few layers which contain calcareous concretions; also a small stratum of gray micaceous limestone, with crystals of calcite and thin strata of marly limestone at 1204 and 1321 feet from the granite. A thick stratum of indurated clay and shale, with traces of obscure vegetable impressions, is found at 1357 feet from granite. At 1490 feet from the granite floor a small coal seam, 5 inches thick, occurs.

The Mesozoic rocks are covered by level strata of more recent origin, consisting of a soft buff-colored conglomerate of red clay, with friable quartz pebbles; at the elevated summit it is from 5 to 46 feet in thickness.

How far the groups characterized above will be verified in other sections of this basin, or even other belts of the same formation in this State, will be, of course, a matter for future determination. But as they are the results of diligent explorations, which are not likely to be soon repeated, they may serve as a useful guide hereafter. To this end a more minute record for public use will therefore be admissible.

Section of the Mesozoic Rocks in the "Richmond Belt," at the Old Midlothian Coal Mine, from the Granite upwards (see Fig. I, Plate VI).

	Total distance from the granite. Feet.	In.
I. *Boulder formation*, 36′.		
36′ *Conglomerate*, yellowish-brown, marly, friable rock, highly calcareous, containing boulders of granite with orthoclase feldspar,	36	
II. *Lower sandstone group*, 251′.		
54′ *Sandstone*, feldspathic brown ferruginous, with small seams of carbonate of lime, particles of specular iron ore, red feldspar, and quartz pebbles,	90	
5′ Brownish-gray argillaceous sandstone and drab-colored slate containing vegetable impressions,	95	
19′ 8″ *Sandstone*, arkose, white, containing blotches of clay, slightly ferruginous, and red feldspar in part,	114	8
6′ *Slate*, drab-colored, containing vegetable impressions,	120	8
3′ *Sandstone*, arkose, gray, containing fragments of teeth (saurian) and red feldspar,	123	8
8′ 6″ *Slate*, gray and black, some highly bituminous, arenaceous, containing *concretions of limestone*, vegetable impressions, teeth, and coprolites,	132	2
9′ 6″ *Sandstone*, brownish-gray, oleiferous, containing red feldspar,	141	8
7′ 4″ *Sandstone*, schistose, containing mineral charcoal at top of strata, and *Slate*, black, bituminous, containing vegetable impressions and coprolites,	149	
30′ *Sandstone*, arkose, white, slightly calcareous, partially coarse in smaller strata, with slaty bands at bottom of strata,	179	
11′ *Sandstone*, brownish gray and arkose; white, hard, *oleiferous* at bottom,	190	
13′ 6″ *Slate*, black, highly bituminous, calcareous, containing *Calamites*, *Cythere*, *Estheria*, and carbonaceous sandstone containing slender vegetable stems,	203	6

	Total distance from the granite. Feet.	In.
23′ 5″ *Sandstone*, arkose, white, coarse, slightly calcareous, and pyritiferous argillaceous sandstone containing carbonaceous vegetable fossils, *red feldspar*,	226	11
20′ *Slate*, black, bituminous, calcareous, containing fish-scales (*Dictyopyge*), *Cythere*, mineral charcoal, and vegetable stems; also carbonaceous sandstone, *red feldspar*,	246	11
17′ 4″ *Sandstone*, arkose, light gray, coarse, slightly calcareous, containing black mica; also arenaceous, dark drab-colored slate containing carbonaceous particles. *Red feldspar* makes its first appearance in this stratum,	264	8
23′ *Sandstone*, arkose, white, coarse, slightly calcareous, containing black mica; also drab-colored calcareous slate and carbonaceous sandstone, containing streaks of carbonate of lime,	287	8
III. *Lower calciferous group*, 245 feet.		
2′ *Slate*, black bituminous, containing streaks of *carbonate of lime*, *fish-scales*, *Estheria*, iron pyrites, and carbonaceous inclosures,	289	8
21′ *Sandstone*, arkose, light gray, coarse, with blotches of clay, oleiferous at top of strata; also argillaceous sandstone containing carbonaceous fossil stems,	310	8
9′ Dark-gray carbonaceous *sandstone*, *slate and limestone*, *fish-scales* (*Dictyopyge*), in black bituminous slate at bottom of strata,	319	8
22′ *Sandstone*, arkose, white, coarse at top of strata, calcareous,	341	8
10′ 10″ *Sandstone*, dark brownish gray, carbonaceous, and slaty, containing carbonized fossil stems,	352	1
11′ *Sandstone*, arkose, white and reddish gray, coarse and argillaceous; sandstone containing mineral charcoal,	363	1
8′ *Sandstone*, drab-colored, micaceous and arenaceous *limestone*,	366	1
20′ *Sandstone*, arkose, light gray, partially coarse and calcareous, containing mineral charcoal and *Calamites*,	386	1
4′ 9″ *Sandstone*, gray, carbonaceous, *slate* and limestone,	390	10
15′ 3″ *Sandstone*, arkose, light gray, calcareous,	406	1
3′ *Sandstone*, dark gray, carbonaceous, *slate* and *limestone*,	409	1
23′ 8″ *Sandstone*, arkose, light gray, mostly very coarse and hard, calcareous, containing blotches of clay and small strata of black slate,	432	9
13′ *Sandstone*, light gray, carbonaceous and slaty, strata containing mineral charcoal,	445	9
14′ 6″ *Sandstone* and *slate*, drab-colored, containing long vegetable stems, carbonaceous particles, pyritiferous slates and small strata of *limestone*,	460	3
18′ *Sandstone*, arkose, grayish white, coarse, *conglomerate*, slightly calcareous,	478	8
17′ 6″ *Sandstone* and *slate*, strata of gray and drab-colored argillaceous micaceous sandstone and slate, calcareous, containing coprolites; also some arkose,	495	9
6′ *Sandstone*, dark, brownish gray, carbonaceous, argillaceous, containing carbonaceous inclosures, also arenaceous *slates*,	501	9
2′ *Oil rock*, strong, brownish-gray sandstone,	503	9

	Total distance from the granite. Feet.	In.
11′ 7″ *Sandstone*, argillaceous, light gray, calcareous and arenaceous *limestone;* fire-clay at bottom of strata, ...	515	4
16′ 3″ *Slate*, black, highly bituminous, containing *fish-scales*, *Estheria*, bony coal, and concretions of *limestone*, ...	531	7
IV. *Carbonaceous group*, 150 feet.		
34′ 9″ *Sandstone*, arkose, light gray, hard, partially coarse, containing an oil-bearing stratum near the bottom, . . .	566	4
5′ First *coal seam*, 3½′ coal, 1½′ slate, ...	571	4
6′ 2″ *Slate* and schistose sandstone, dark gray, pyritiferous, . .	577	6
4′ 3″ *Sandstone*, arkose, light gray, partially schistose, containing mineral charcoal, ...	581	9
8′ *Slate*, dark gray, vegetable impressions, ...	589	9
9′ 10″ *Sandstone*, arkose, gray, with argillaceous blotches, . .	599	7
1′ Second *coal seam*, ...	600	7
9′ *Slate*, gray, containing carbonized vegetable stems, . . .	609	7
9′ *Sandstone*, arkose, gray, hard, containing carbonaceous blotches,	618	7
12′ Third *coal seam* divided by slaty bands, from 2″ to 24″, . .		
10′ 3″ *Sandstone*, gray, silicious and gray *slate*, containing *Calamites*,	655	4
14′ 6″ *Coal seam* divided by various slaty bands, ...		
4′ *Slate*, black and argillaceous sandstone, micaceous, containing crystals of calcite and thin sheets of the same; *Equiseta*, particles of coal, ...	659	4
11′ *Sandstone*, arkose, grayish white and drab-colored, argillaceous, slightly calcareous blotches of clay, ...	670	4
12′ *Slate*, black, bituminous, containing remains of fish (*Tetragonolepis*), *Cythere* and *Estheria*, and a stratum of limestone (sometimes 2 feet thick); carbonaceous sandstone in part, containing *Tæniopteris* and *Equisetum*, ...	682	4
V. *Oleiferous group*, 191 feet.		
10′ 6″ *Sandstone*, arkose, gray, hard, and coarse, slightly calcareous and schistose sandstone, ...	692	10
7′ *Slate*, highly bituminous and carbonaceous sandstone, containing fish-scales and long vegetable stems, ...	699	10
4′ 6″ *Oil rock*, sandstone, light gray, with greenish blotches, slightly calcareous, ...	704	4
17′ *Sandstone*, arkose, light gray, coarse; also schistose, . . .	721	4
9′ *Slate*, black, containing fish-scales, *Estheria*, *Calamites*, and other vegetable impressions; also gray *limestone*, ...	730	4
24′ *Sandstone*, arkose, coarse, and carbonaceous sandstone, oleiferous near top of strata, ...	754	4
6′ 8″ *Sandstone*, coarse and very hard, arkose, white, . . .	761	
6′ 6″ *Slate*, black, bituminous and greenish, calcareous and arenaceous, micaceous, containing marly limestone, fish-scales (*Tetragonolepis*), *Cythere*, *Estheria*, vegetable impressions and coaly particles, ...	767	6
13′ 2″ *Sandstones*, gray, argillaceous and schistose; also feldspathic, containing mineral charcoal, ...	780	8

	Total distance from the granite. Feet.	In.
7′ 8″ *Slate*, black bituminous, pyritiferous, containing fish-scales (*Tetragonolepis*), *Estheria*, *Cythere*, and long vegetable stems; also a stratum and concretions of a fibrous nearly black carbonate of lime and carbonate of iron; also a strong *oil rock*, .	788	4
32′ 8″ *Sandstone*, arkose, grayish white, porous in two heavy strata, containing an *oil rock* near top of the last bench, . . .	821	
3′ 6″ *Slate*, greenish, dark drab-colored, and black, highly bituminous slate, containing *Cythere*, fish-scales, and carbonate of lime in thin sheets, sometimes *oleiferous* sandstone at bottom,	834	6
20′ 6″ *Sandstone*, arkose, grayish white and gray argillaceous, partially large quartz pebbles (probably containing teeth of saurians), ...	851	
14′ 9″ *Sandstone* and *slates*, drab-colored, arenaceous, and arenaceous *limestone*, ...	865	9
7′ 8″ *Slate*, gray and black, containing fish-scales, *Cythere*, *Estheria*, *Calamites*, and other imperfect vegetable impressions, concretions of limestone, and iron pyrites upon the joints of the rock. (Teeth of saurians), ...	873	5
VI. *Upper calciferous group*, 334 feet.		
28′ 7″ *Sandstone*, arkose, light gray and schistose sandstone, with slaty strata, ...	902	
23′ *Slate*, gray, arenaceous and black fissile, containing fish-scales, *Calamites*, *and long vegetable stems and limestone*, arenaceous, drab-colored, in small strata; also some benches of arkose dividing it from the next, ...	925	
7′ 9″ *Slate*, pyritiferous, containing in addition, *Estheria*, thin sheets of calcite and gypsum, ...	932	9
5′ 9″ *Sandstone*, arkose, light gray, conglomerated and carbonaceous, ...	938	6
3′ 6″ *Slate*, dark gray, pyritiferous, containing gypsum, . .	942	
16′ 9″ *Sandstone*, arkose, light gray, coarse, slightly calcareous, .	958	9
13′ 10″ *Slate*, dark gray and drab-colored, containing *calcareous* concretions, pyritiferous, obscure vegetable impressions, .	972	7
12′ 4″ *Sandstone*, arkose, white, slightly calcareous, . . .	984	11
5′ 1″ *Slate*, gray, calcareous, and 3′ 6″ *limestone*, . . .	990	
45′ 1″ *Sandstone*, arkose, grayish white, calcareous, in heavy benches divided by slaty strata, ...	1035	1
18′ 2″ *Slate*, black, pyritiferous, calcareous, containing fish-scales, *Estheria*, and limestone strata from 1″ to 4″, . . .	1053	3
27′ 10″ *Sandstone*, arkose, light gray, coarse and calcareous, and argillaceous carbonaceous *sandstones*, ...	1081	1
30′ 9″ *Slate*, gray and drab-colored, and arkose; small strata of limestone at the top, larger at the bottom, the latter in slate, containing fish-scales, ...	1111	10
36′ 9″ *Sandstone*, greenish gray, fine-grained and arkose in middle of strata, ...	1148	7
29′ 9″ *Slate*, black, micaceous, calcareous and argillaceous micaceous sandstone, obscure vegetable impressions, . . .	1178	4

	Total distance from the granite. Feet.	In.
15′ 1″ *Sandstone*, arkose, grayish white, coarse, calcareous,	1193	5
13′ 7″ *Slate*, black or bluish-black, compact, finely laminated and benches of ash-colored sandstone, near top of strata; obscure vegetable impressions, *Calamites* in lower part of strata,	1207	
VII. *Upper sandstone group*, 291′ represented.		
30′ 6″ *Sandstone*, gray schistose, containing micaceous limestone, with crystals of calcite upon bed plains,	1243	6
28′ 5″ *Sandstone*, arkose, principally, and benches of schistose micaceous sandstone, containing vegetable impressions,	1271	11
2′ 6″ *Slate*, dark gray, arenaceous; *Calamites*,	1274	5
12′ 11″ *Sandstone*, arkose principally, and dark brownish-gray fine-grained slate, calcareous sandstone, coarser at bottom,	1287	4
8′ *Slate*, dark gray,	1295	4
26′ *Sandstone*, ash-colored, fine-grained, *calcareous*,	1321	4
14′ 11″ *Slates*, dark drab-colored and greenish gray, calcareous concretions at top, 6″ marly limestone at middle of stratum; also greenish-gray argillaceous sandstone in upper part,	1336	3
21′ *Sandstone*, arkose, light ash-colored, medium-grained, containing inclosures of clay, decomposed feldspar, calcareous,	1357	3
26′ 4″ *Shale*, gray and drab-colored, obscure traces of vegetable remains,	1383	7
37′ 5″ *Sandstone*, gray, argillaceous, fine-grained,	1421	
24′ 5″ *Sandstone*, arkose, gray, coarse,	1445	5
43′ 5″ *Sandstone*, ash and buff-colored, calcareous in last four feet,	1489	10
5″ *Coal seam*,	1490	3
8′ 5″ *Shale*, buff-colored, approaching fuller's earth. *Recent deposits*, from 5 to 46 feet,	1498	8
20′ Surface soil followed by soft buff and pink-colored conglomerate of red clay and quartz pebbles; also frequently a pure gravel bed,*	1518	8

---

* Upon the north side of James River the results of this investigation are verified by a section at the Carbon Hill mines given previously by Mr. Werth, Sr., formerly agent of the mines, as the following comparison shows:

Recent formation: Soil,	20 feet.	20 feet.	
Group No. VI. Upper calciferous. Alternating shales and sandstones,	450 "	335 feet of it.	
Group No. V. Oleiferous. Cinders, so-called, fire-clay,		195 feet.	
Nodular pyrites,	15 "		
Shales and sandstones,	60 "		
Group No. IV. Carboniferous. Coke seam, coke 2′ 3″ / coal 3′ 6″	6 "	152 feet.	
Shale and sandstone,	50 "		
Coal seam,	6 "		
Shales, 3d seam,	17 "		
Coal seam,	4½ "		

Comparing the results thus obtained at the Richmond basin with the sections obtained in other parts of this State, but which unfortunately are not yet sufficiently verified for publication, or with those already published from other States, containing the extension of the Mesozoic belts of Virginia, we can trace more or less distinctly the same series of succeeding divisions, although they are sometimes partially obliterated by the changed aspect of material. Commencing at the Mesozoic formation of North Carolina, so ably delineated by Professor E. Emmons in his geological survey of that State, we notice upon the Archæan rocks:

1. *Conglomerate succeeded by the lower sandstones*, generally more red in color, probably 1500 feet or more, but materially thinning out northward. Conifers most common as silicified trunks. Represented by groups I and II, Richmond Section, 287 feet thick.

2. *Coal measures.* Gray and drab-colored sandstones, calcareous shales and slates, lead-colored and black, coal seams, strata containing iron balls (argillaceous iron ore), vegetable and animal remains, consisting of *Equisetum*, *Calamites*, arenaceous and others, *Estheria*, and *Cythere*, remains of saurians and fish, 1200 feet thick. Represented by groups III, IV, and V, about 586 feet, of the Richmond section, containing *Tæniopteris*, *Pecopteris*, *Tetragonolepis*, and large saurian teeth, *Clepsysaurus* or *Belodon*.

3. *Upper sandstones.* Upper conglomerate in the lower part of the formation, green and dark-colored slates, containing cycads, ferns, and lycopodiacea, also red and gray sandstones, and marls, more or less mottled with green and white, containing *Estheria*. Represented by groups VI and VII, of which 625 feet are developed in the section, containing fish-scales, *Estheria*, and mostly obscure vegetable remains.

The same observations seem to hold good in the Dan River basin, in North Carolina, as well as in Virginia, and also in the Potomac basin as far as it can be traced at the surface.

	Shales and sandstones containing 6″ seam of coal, 2d seam, . . .	40 feet.	
	Coal seam, slope seam 8–10′, 1st seam, .	9 "	
Group No. III.	*Lower calciferous.* Sandstones and slates to supposed granite base of coal, ...	160 "	140 feet of it.
		837½ feet.	

The coke seam is not represented in the Midlothian mines, except by slates with bony coal.

Proceeding from the east across the latter basin, we notice sometimes the lower conglomerate, as at Drainsville and other places, but invariably the red and brown sandstones and slates of the lower group, No. II, followed by gray and ash-colored as well as red sandstones, and calcareous shales, their position being partially indicated by the remains of vegetable and animal origin, and their calcareous character. In consequence, probably, of the effect of igneous rocks predominating in that section, we meet sometimes the conglomerate again upon the western margin. It has been known for many years that the Mesozoic sandstones of North Carolina, as well as Virginia, contain workable seams of coal of great economical value. Questions of vital importance are, therefore: *Where is the proper geological horizon of these coal seams? Will they occur at a comparatively permanent position in the series? Are they sometimes disguised by being deteriorated?*

In regard to the State of Virgina, it was generally supposed and so stated, that the seams of coal rested immediately upon, or only divided by a few feet of slate from, the older Archæan rocks forming the floor of the basin. When the subdivisions of the North Carolina series had been laid down conclusively by Professor E. Emmons, it was firmly established in that section of country that a considerable series of sedimentary strata, entirely wanting in Virginia, existed below the seams of coal. Explorers, therefore, naturally looked for the primary rocks as the most permanent landmark for the outcrop of the coal seams. Many a disappointment followed this universal conclusion, and even the continuity of the coal seams in the Richmond basin was doubted. It can now be seen with perfect clearness how that error occurred and was maintained for many years. It so happened that a number of the most valuable discoveries in the early days of mining in that section of country were upon points where the granite floor, previous to the deposition of the coal, had been carved out at a very abrupt angle. Consequently, the seams of coal, sometimes even at a very steep angle with the granite floor, were considered to conform in deposition with the granite. This error was still more persistently followed, because in many instances where even sedimentary strata underlaid the coal, they were frequently of the nature of sandstone, hardly distinguishable from true granite, except by diligent and trained observers. It being considered an established fact that no workable seams of coal existed below the main big seams generally mined there, almost no sinking of shafts below that seam of coal was carried on, or the sinking was

at least invariably stopped as soon as a hard feldspathic sandstone was encountered, which appeared to be granite to the uninitiated eye.

The above explorations, therefore, establish the following very important points:

1. At least five hundred and sixty feet of purely sedimentary rocks exist in the Mesozoic formation (at least in the Richmond basin) below the last coal seam, or nearly from the bottom of the carbonaceous group.

2. All the workable seams of coal are concentrated within the central part of about one hundred feet of the carbonaceous group, characterized, particularly at the top and bottom, by very coarse, hard sandstones, with highly fossiliferous slates below each of them, containing *Equiseta* and other vegetable impressions, fish-scales, *Estheria*, and limestone, in concretions or small strata.

3. A small seam of coal exists in the upper sandstone group.

4. No true coal seam, only highly bituminous shales, have as yet been found in the strata below the carbonaceous group.

5. Oil rocks exist above and below the carbonaceous division, but are more numerous above. In this group may belong the coke seam at Carbon Hill.

In regard to disturbances which occurred subsequently to the deposition of the formation, we may say, that while instances of the kind are by no means wanting, still they are of far less magnitude than might be anticipated.

The unevenness of the floor of the Archæan rocks, no doubt, first effected the deposits above, probably by the subsiding, or even by the giving way of the strata, in consequence of shrinkage. These effects may be noticed in small anticlinal and synclinal rolls of the strata, as well as by limited shifting, principally downwards. Two main directions of disturbances may be noticed: one, about parallel with the trend of the formation; the other, and more important, oblique. The former frequently exhibits dislocations of a few feet or more, but the strata almost invariably recur regularly to the dip. The latter frequently produces disturbances of far more magnitude, pinching strata often entirely out of existence.

The former, therefore, may be due more to the effect of shrinkage, and a consequent slipping or bending of the upper strata. The latter, no doubt, is often due to the influence of eruptive rocks, which more frequently cross the formation obliquely than parallel with the trend. The effects of these eruptive rocks in hardening those adjoining, or crushing them into brecciated rocks, or debituminizing

the carbonaceous strata, at least for a short distance, are frequently noticed. A remarkable instance of the latter was once visible at the Clover Hill mines, in the Richmond basin, where a dike of dolorite had penetrated the stratification obliquely.

In the slates above the coal the dike had (probably) produced a cavity of considerable magnitude, which was found to be completely lined with perfect crystals of calcite. The coal next to the dike was converted into a coke somewhat resembling artificial coke, but more compact. In about fifty feet or more the coal gradually increased in bituminous matter until it assumed its original state.

IV. Fossil Remains of the Formation.

Though not able to do justice to the subject, I cannot pass over it entirely, or refrain from mentioning at least such of the fossil remains as have been so far noticed in the strata. This is the more necessary as some of them appear to define certain geological horizons.

Prof. W. B. Rogers, in his report to the Association of American Geologists and Naturalists, in 1840–42, in which he endeavored to define the geological age of the secondary sandstone formation of Virginia, refers to the following fossil remains:

1. *Remains of Vegetable Origin.—Equisetum columnare, E. arundiniforme; Calamites arenaceus, C. planicostatus; Tæniopteris magnifoliæ; Pecopteris Whitbyensis, P. Munsteri, P. obtusifolia (?); Lycopodites uncifolius; Zamites obtusifolius, Z. Whitbyensis (?).*

2. *Remains of Animal Origin.*—Teeth, probably of saurians. Fish-scales, probably of a new genus of *Catopterus; Posidonia* (now generally recognized as *Estheria*).

The fossil remains collected during the exploration above referred to contain, according to the revised determination of Prof. C. E. Hall, University of Pennsylvania, the following:

1. *Of Vegetable Origin.—Equisetum Mongrotii* (internal cylinder, formerly called *Calamites arenaceus*); *E. gamnigianus* (closely allied to *E. Nuzeri*); *E. Munsteri, E. Rogersii* (in part); *Calamites Suckowii;* tubercles of *Equisetum; Schizoneura meriani;* cones of coniferous trees.

2. *Of Animal Origin.—Estheria ovata* and *minuta; Cythere; Dictyopyge; Tetragonolepis* (whole specimen of fish, various fragments of bones and bony plates, scales, probably also fragments of a tooth); *Clepsysaurus* or *Belodon* (large tooth); coprolites.

In the variegated shales of the Potomac basin remains were found by the author, which seem to be the plates of a species of *Sphaerites* (according to Quenstedt). They are about $\frac{1}{8}$ to $\frac{3}{16}$ inch in diameter, hexagonal, and apparently without central perforation. They may be more minutely described at a future time, as it will be of considerable interest to distinguish their position in the series, because so far, I believe, the absence of radiata in the Mesozoic formations of America has been generally admitted.

Regarding the position which these various remains assume in the geological column, so far as developed by the section at Midlothian, the following statements may be of assistance in verifying them hereafter at other localities:

Commencing from the granite floor in group I, and lower part of II, no fossil remains so far have been detected for the first 90 or 100 feet. We then meet with obscure vegetable impressions, and at 123 feet the first fragment of a tooth, and coprolites for the next 25 feet. At 200 feet we recognize *Estheria, Cythere,* and *Equisetum Mongrotii,* which continue through the strata above in connection with others. During the next 50 feet we also find the first small scales of fish (*Dictyopyge*). At about this point and a little higher up the last red-colored feldspar has been detected. In group III, at about 500 to 528 feet, the occurrence of a highly bituminous dark drab-colored and black shale, containing fish-scales, *Estheria,* bony coal, and concretions of limestone, is remarkable, because below it a strong brownish-gray oil-rock exists.

No animal remains have been detected within the group IV, except in the top strata of the group. Among the various vegetable remains, near the top of this group, or the lower part of V, *Tæniopteris magnifoliæ* has been found, also, *Schizoneura meriani,* the strata containing also *Cythere, Estheria,* and fish-scales of the genus *Tetragonolepis,* which is now found in several strata. The fossiliferous strata containing more or less the same remains now continue through group V in greater profusion, including also the saurian teeth. After about 1100 feet above the granite no animal remains have so far been detected, but vegetable impressions continue. No attempt will be made here to enter into a dispute in regard to the real geological age which may be assigned to the various divisions laid down in the section. In fact, they have been more sought for to answer the purpose of the practical explorer than the speculative geologist. A distinctive feature seems to be the predominance of

the remains of fish and saurians within a certain range of the series. All the fossils so far refer to the Triassic period. Still in Germany at least (Quenstedt, *Petrefactenkunde*), *Tetragonolepis* has never been found in the Solnhofen calcareous slates and limestones, and according to the same authority is hardly found anywhere except in the Lias. It is also frequently noticed in the Richmond coalfield that the strata below the carboniferous area have a more rapid dip, and in some cases unquestionably a different bearing. The latter important fact has been variously noticed between the primary border of the basin and the course of the outcrop of coal where exposed or explored for. It has also been frequently noticed in the mines in cases of disturbed ground by the rising of the floor. Of course more evidence from various localities is yet desirable to verify so important a fact. The occurrence of gypsum as far as noticed is confined to strata above the lower sandstone, and principally to the strata above the carboniferous series.

Taking all facts together it is not unlikely that at least the lower groups below the carboniferous are depositions of a different geological area, in which case it would seem to be settled that the carboniferous and oleiferous groups represent the Lettenkohle of the Triassic. But in the upper series of rocks a subdivision may yet be found to exist when the full series can be determined above the 1500 feet represented in the Midlothian series.

V. Economical Products of the Formation.

The variety of useful minerals and rocks which occur in the Mesozoic formation in this State does not appear great, still there are some of much value, and in the hands of men who knew how to develop them to their full extent, they might have been a great source of wealth long ago.

Amongst the most valuable of all must be mentioned the bituminous coal, which exists not only in workable, but in a number of instances in seams of most magnificent size and excellent character. It has been already stated that various kinds of coal occur; still, that of the most practical value is the true and highly bituminous variety.

This coal is known to exist in the Richmond, Farmville, and Dan River basins, but has been principally worked in the first-named, and is therefore best known from that locality. Its existence was

known in 1700, and the coal was used as early as that date in the neighborhood.*

At least two workable seams of coal are known to exist in that basin: the lowest seam from three to five feet, and the big, or upper seam, from twenty to forty feet and more in thickness, and occasionally developed in two seams, divided by a series of slates and sandstones from five to ten feet thick. The distance between the upper and lowest seam is about fifty feet. There is no doubt whatever that these carboniferous deposits, geologically speaking, are continuous. But, like many other formations of the kind, they have their deteriorated localities and pinched places, which may, and often have, deceived the inexperienced. The coal, although in various instances reaching almost to the surface, has its outcrop hidden by a covering of alluvium, and also probably, to a small extent, by Tertiary strata, ranging from ten to forty feet. The seams pitch variously from 20° upwards. Nearly flat depositions exist in the bottom of the subordinate troughs or synclinal basins, and heavy pitches to 60° and 70° near the anticlinal rolls or saddles; on the average, a pitch of 25° to 35° may be assumed. The course of the coal is about N. 12° to 15° E. The main dip in the Richmond basin upon the eastern side is northwest, upon the western, southeast.

Where the coal is not so thick, its exploitation offers no material difficulty, but it is often the case that the main seam assumes very considerable dimensions. In such instances, as in many others in this country, much coal has been lost or wasted from the bad system adopted for working the coal. The highly bituminous character of the coal gives rise to an abundance of carburetted hydrogen gases, which render a most thorough system of mechanical ventilation indispensable. Not unfrequently the roof is too defective to stand unsupported for a great length of time, and therefore the main avenues of entrance must be kept in a secure condition, for which timber-work is the cheapest, at present at least, although well-established mines in that district may now more profitably resort to other materials. For the sake of economy, these avenues ought to be reduced to the smallest practical dimensions. Considering all these conditions, it is easily to be seen that no plan for a secure pit could here be adopted by which most of the available coal could be obtained while entering the mine. A certain portion of the

* I refer here to the historical sketch given in a former paper to the Institute, 'The Midlothian Colliery, Virginia, in 1876." Transact., vol. iv, p. 308.

ground has to be laid out in such a manner as to avoid all the difficulties mentioned above, and the main bulk of the coal obtained by retreating or working homewards. This can be best accomplished in the thinner seams by a modification of the long-wall system by small-wall faces (*l'exploitation par tailles ascendantes*); in the thicker, by a system of long and strong pillars, which are won on working homeward, the ground behind being gobbed up.* As the seams in this district are generally divided by slates, in connection with other waste, the system will work well in the hands of a careful and experienced manager. Certain precautions must be taken in using the slates for gobbing up. They are liable to spontaneous combustion, the prevention of which must be thoroughly attended to. With such precautions as above mentioned, the yield of these seams is most favorable, and it is astonishing that so little attention has yet been paid to this section of country. According to former statements the Mesozoic rocks cover an area of 189 square miles, in the Richmond coal basin, equal to 120,960 square acres. Not over 500 acres of this area has actually been worked, but what is still more important, these 500 acres are principally divided into about six localities, namely, the mines about Carbon Hill, National, Midlothian and vicinity, and Clover Hill, upon the line of eastern outcrop, at the extreme northern and southern points, and about in the middle of the border line of twenty-eight miles extent; also for about ten to twelve miles upon the extreme northern point of the western outcrop, in the vicinity of Dover, and the mines south of James River; in all, say thirty-eight to forty miles of outcrop, the circumferential line of the basin being about seventy-five miles. The total production from 1822 to 1877 of the Richmond coal field amounted to 5,647,620.61 tons, or without any allowance for years previous to 1822, it would average a yield of 102,684 tons per annum, and 11,295 tons per acre of ground worked. That this is by no means an unreasonable calculation has been practically proved at Midlothian, where, in 1873, from one acre of ground 19,057 tons of coal were raised from a twenty-foot seam, averaging twelve to fifteen feet of coal. (Transactions, vol. ii, p. 113.)

According to the statistics given in "Coal Regions of America," by Macfarlane, from the Cumberland coal region, the aggregate production for thirty years, of 2525 acres, was 12,953,317 tons, or 5130 tons per acre, from the big fourteen-foot seam of a very pure coal.

* See "What is the Best System for Working Thick Coal Seams?" By author. Transact., vol. ii, p. 105.

Analyses of Coal from the Richmond Basin.

SOUTH OF JAMES RIVER.

	NAME OF PIT.	BY WHOM ANALYZED.	Moisture.	Volat. matter.	Fixed carbon.	Ash.	Sulphur.	Coke.
	EASTERN OUTCROP.							
Chestf'ld C.&I.M.C. Midlothian Colliery.	Clover Hill (Coxe's Mines)...	Prof. Johnson.....	1.339	30.984	56.831	10.132	.514	66.963
	" " " "	W. B. Rogers.....	—	29.12	65.52	5.36	—	70.88
	" " " "	G. W. Andrews.....	—	38.50	55.00	6.50	—	61.50
	Stone Henge.....	W. B. Rogers.....	—	36.50	58.70	4.80	—	63.50
	Creek Company Shaft.....	Prof. Johnson.....	1.450	26.788	60.30	8.57	2.89	68.872
	Mills & Reed, Creek Shaft.	W. B. Rodgers.....	—	38.60	57.80	3.60	—	61.40
	Greenhole Shaft.....	" "	—	31.17	67.83	2 00	—	69.83
	Midlothian, average.....	Prof. Johnson.....	2.455	29.738	53.012	14.737	.058	67.749
	" " new shaft.....	" "	0.670	31.208	56.40	9.44	2.286	65.840
	" " screened	" "	1.785	34.295	54.063	9.655	.202	63.718
	" " 900 ft. shaft..	" "	1.172	27.278	61.083	10.467	—	71.550
	" "	B. Silliman and O. P. Hubbard.....	2.000	31.62	58.26	7.67	—	66.310
	" "	J. H. Alexander.....	—	31.60	61.10	7.10	—	68.20
	" " Grove Shaft, 1875, screened.....	A. S. McCreath.....	1.03	38.23	54.27	6.47	1.52	60.74
	Midlothian, average.....	" "	1.05	36.49	46.702	15.758	2.23	62.468
	Maidenhead.....	W. B. Rogers.....	—	32.83	63.97	3.20	—	67.17
	English Co., old shaft.....	" "	—	35.82	53.36	10.82	—	64.18
	" " middle bench.	" "	—	28.40	66.50	5.10	—	71.60
	" " top bench.....	" "	—	28.80	61.68	9.52	—	71.20
	Chesterfield Mining Co.....	Prof. Johnson.....	1.896	28.719	58.794	8.634	1.957	67.428
	Willis' Pit (Ætna Shaft.).....	Clemson.....	—	28.80	66.60	4.60	—	71.20
	WESTERN OUTCROP.							
	Powhatan Pits.....	W. B. Rogers.....	—	32.33	59.87	7.80	—	67.67
	Scott's Pit.....	" "	—	33.70	60.86	5.66	—	66.52

NORTH SIDE OF JAMES RIVER.

EASTERN OUTCROP.							
Carbon Hill, bit. upper seam..	O. J. Heinrich.....	1.40	20.60	60.80	17.20	Not determ'd	78.00
" " second seam.....	" "	0.40	18.60	71.00	10 00	—	81.00
" " carbonite.....	" "	1.57	9.64	79.93	8.86	Considerable.	88.79
" " average.....	Prof. Johnson.....	1.785	23.959	59.976	14.28	—	74.256
" " natural coke.....	" "	1.116	11.977	75.081	11.826	—	86.907
" " carbonite.....	Dr. W. Wallace, of Glasgow.....	1.56	14.26	81.61	02.24	0.33	83.85
WESTERN OUTCROP.							
Anderson's Pits (Dover).....	W. B. Rogers.....	—	28.30	66.78	4.92	—	71.70
" "	Clemson.....	—	26.00	64.20	9.80	—	74.00
T. M. Randolph.....	W. B. Rogers.....	—	30.50	66.15	3.35	—	69.50
Coalbrookdale.....	" "	—	29.00	66.48	4.52	—	71.00
" 1st seam.....	" "	—	24.00	70.80	5.20	—	76.00
" 2d seam.....	" "	—	22.83	54.97	22.20	—	77.17
" 3d seam.....	" "	—	24.70	65.50	9.80	—	75.30
" 4th seam.....	" "	.....	21.33	56.07	22.60	—	78.67
Cranches, upper seam.....	" "	.....	30.00	64.60	5.40	—	70.00
Waterloo.....	" "	.....	26.80	55.20	18.00	—	73.20
Deep Run Basin.....	" "	.....	26.16	69.86	5.00	—	74.86
FOR COMPARISON.							
Westmoreland, Pa., Gas Coal.	Booth & Garrett.....	1.30	31.45	61.45	5.80	1.04	67.25
Campbells Cr'k, W.Va., splint.	Riverside Iron Co....	1.88	35.64	61.07	1.41	—	62.48
" " 2d seam.....	W. B. Rogers.....	—	32.24	64.16	3.60	.....	67.76
" " 3d seam.....	" "	—	33.68	57.76	8.56	.....	66.32
Cannelton, Gas Coal.....	Ford.....	—	35.10	62.90	2.00	.....	64.90
Raymond City.....	Vinton.....	—	33.00	60.10	6.90	.....	67.00
Lingan, Cape Breton.....	Chandler.....	—	35.20	60.80	4.00	.....	64.80
Newcastle, England.....	"	.....	32.70	65.55	1.75	.....	67.30
" "	McCreath.....	0.69	30.29	64.69	2.81	1.52	67.50

In spite, then, of even the inferior mining in Virginia, the results are extremely favorable. A full report of the production of the Richmond coal field, as far as correct statistics could be obtained, will be found below.

In regard to the quality of the coal, a large number of analyses in the accompanying table may speak for themselves. For the purpose of comparison, a number of analyses of coal, with which the Richmond coal should be in a fair competition, has been included in the same table. The "Committee on Light," from the Richmond Gasworks, reported in 1874 (*Richmond Dispatch*, July 17th), upon coal tested from the Richmond basin and West Virginia, as follows:

Kind of Coal Used.	Number of lbs. used.	Yield per lb. cub. ft.	Yield per ton cub. ft.	Candle power.
WEST VIRGINIA.				
Coal Valley	40,810	4.11	9,206	14.50
Gordon & Seal	25,900	4.06	9,094	15.50
W. C. Robinson	25,690	4.05	9,072	13.90
Coalburg	28,000	3.78	8,467	13.80
Cannelton	24,000	3.97	8,892	13.90
Hampton City	20,340	4.10	9,184	14.90
RICHMOND BASIN.				
Clover Hill	25,650	4.00	8,960	13.90
Marks (Midlothian vicinity)	26,750	3.98	8,915	13.80
Old Dominion	27,810	3.80	8,512	13.80

The price paid at the time was $5.50 per ton, which would be highly remunerative for the Richmond mines, because by reasonable rates of transportation they should be able to deliver coal at Richmond from $2.50 to $3.00 per ton, if large quantities were mined.

From a close observation of the chemical analyses of this coal it will be noticed that it ranges generally high in ash, which is in consequence of a greater or less amount of slaty substances contained in some of the benches of coal, while others are perfectly pure. This defect could be remedied by the introduction of the hydraulic jigs, now so extensively used in Europe in the bituminous coal fields of the Continent. Particularly all the fine coal, which in bituminous coal forms always a considerable quantity of the whole production, could be purified at low cost, and then converted into a very superior coke, to which this coal is particularly adapted, and for which a market could be established by the erection of furnaces along the James River Canal.

By a close study of this coal it will be noticed that often on the

Annual Production and Shipments of Coal from the Richmond Coal Basin, in Tons of 2,000 Pounds.

Fiscal year, Oct. 1st to Sept. 30th.	Shipped by Richmond, Fred. and Potomac R.R.	Shipped by James River and Kanawha Canal.	Shipped by Richmond and Danville R.R.	Shipped by Clover Hill and Richmond and Pet. R.R.	Miscellaneous transportation by wagons.	Consumed at the mines; estimated 7 per cent. of production, except where otherwise obtained.	Total amount shipped.	Total amount produced.	General Remarks.
1822–42	.....	.....	.....	.....	.....	....	1,925,000.	1,925,000.00	Total amount according to R. C. Taylor's and other reports.
1843	18,000 est.	....	.....	14,300 est.	57,051	6,254.57	89,351.	95,605.57	Previous to 1841, Deep Run produced about 18,000 tons, taken as average until 1847, when the mines stopped.
1844	18,000 "	18,418	.....	14,300. "	57,051	7,543.83	107,769.	115,312.83	Ch. C. & I. M. Co., raised 213,508 tons, from 1841 to 1851, or 21,351 tons, on an average.
1845	18,000 "	36.446	.....	14,300. "	57,051	8,805.79	125,797.	134,602.79	Midlothian Co., est. 35,700 tons, on an average, from 1843 to 1852; books burned at the evacuation of Richmond.
1846	18,000 "	23,462	.....	18,000. "	57,051	8,155.91	116,513.	124,668.91	Transportation on old Richmond horse railroad, up to 1851, from Midlothian district.
1847	18,000 "	27,446	.....	25,000. "	57,051	8,924.79	127,497.	136,421.79	Clover Hill R.R. books burned at the evacuation of Richmond; amount est., from 1843 to 1852, by the treasurer of the company.
1848	.....	30,797	....	25,000. "	57,051	7,899.36	112,848.	120,747.36	
1849	.....	37,997	.....	30,000. "	57,051	8,753.36	125,048.	133,801.36	
1850	.....	35,937	.....	36,000. "	57,051	9,029.16	128,988.	138,017.16	
1851	.....	27,531	17,432.40	43,000. "	39,619	8,940.74	127,582.40	136,523.14	
1852	.....	21,752	34,955.25	43,000. "	.....	6,979.49	99,707.25	106,686.74	
1853	.....	21,098	15,620.69	58,352.	.....	6,654.97	95,070.69	101,725.66	
1854	.....	20,533	43,454 00	59,895.36	.....	8,671.74	123,882.36	132,554.10	
1855	.....	21,152	35,621.95	60,961.60	.....	8,241.45	117,735.55	125,977.00	
1856	.....	19,084	38,842.	41,279.84	.....	6,944.42	99,205.84	106,150.26	
1857	4,000 est.	28,824	24,274.	50,216.32	.....	7,511.98	107,314.32	114,826.30	
1858	4,000 "	17,477	29.918.	54,904.64	.....	7,434.70	106,299.64	113,734.34	
1859	4,000 "	14,156	30,834.	50,391.04	.....	6,956.67	99,381.04	106,337.71	
1860	3,495	21,305	32,315.	47,999.84	.....	7,358.04	105,114.84	112,472.88	
1861	500	20,146	18,353.	49,502.88	.....	6,195.13	88,501.88	94,697.01	
1862	.....	20,612	29,146.	56,680.96	1,500 est.	7,555.73	107,938.96	115,494.69	Miscellaneous transportation, estimated by hauling in wagons, during the war.
1863	.....	19,608	42,000 est.	41,628.16	1,500 "	7,331.52	104,736.16	112,067.68	R. & D. R. R., no reports kept in consequence of depreciation of currency during the war.
1864	.....	20,000 est.	42,190.	40,751.20	1,500 "	7,300.87	104,441.20	111,742.07	J. R. & K. Canal, estimated; books being burned with the office at the evacuation of Richmond.
1865	....	20,000 "	42,000 "	5,312.72	1,500 "	4,916.89	68,812.72	73,729.61	R. & D. R.R., the same reason as in 1863.
1866	.....	19,842	25,918.	20,512.80	....	4,639.09	66,272.80	70,911.89	R. F. & P. R.R., no coal shipped during the war, the Deep Run mines belonging to a Northern company.
1867	6,289.2	41,150	19,700.1	18,384.24	.....	5,286.65	85,523.54	90,810.19	
1868	2,605.5	45,280	14,782.	27,223.84	.....	6,292.39	89,891.34	96,183.73	
1869	9,179.07	38,682	20,433.	39,709.21	.....	7,560.23	108,003.28	115,563.51	
1870	2,904.03	31,100	26,734.	23,560.16	.....	5,900.87	84,298.19	90,199.06	
1871	2,078.	11,860	34,288.	47,037.20	.....	6,668.42	95,263.20	101,931.62	
1872	57.	13,167	29,175.	47,295.36	.....	6,278.60	89,694.36	95,972.96	
1873	3,027.	13,792	38,025.	40,019.84	.....	6,640.47	94,863.84	101,504.31	
1874	824.	20,440	18,690.21	36,542.24	.....	5,354.75	76,496.45	81,851.20	
1875	5,404.	19,301	14,453.08	43,744.96	.....	5,803.21	82,903.04	88,706.25	
1876	.....	8,682	16,321.64	28,366.00	.....	3,812.00	53,369.64	57,181.64	
1877	....	6,841	14,741.49	84,197.00	....	12,127.80	55,779.49	67,907.29	
Total,	138,362.80	793,918	750,217.81	1,287,369.41	502,027	250,725.59	5,396,895.02	5,647,620 61	

Averaged from 8 yrs.

same specimen, as well as in large benches, three varieties exist, which are also noticed in other coal fields.

1. *Glance coal,* of a deep black color, vitreous lustre, and great brittleness; appears like pitch, in thick strata.

2. *Lamellar coal.* Grayish-black, or brownish-black, of a dull resinous lustre, much tougher, generally in thin strata.

3. *Fibrous coal.* A natural mineral charcoal; occurs in very thin film-like layers between the former, also in the form of small pieces; it is much like compressed dust. According to the investigations of Dr. A. Schondorff, in the coal fields of Saarbrucken, the average composition of these varieties is as follows:

	Glance coal.	Lamellar coal.	Fibrous coal.
Water	4.26	3.00	0 86
Volatile matter	29.00	38.00	7.98
Coke	64.74	55.80	83.89
Ash	2.00	3.20	7.37

It will be readily perceived that even if much of the fibrous coal should occur, washing will reduce the amount of ash, the fibrous coal being the highest in ash.

This field yielding an excellent gas coal, as well as coking coal, steam coal, and blacksmith coal, its revival in the markets of the United States, which it commanded before the late civil war, will only be a matter of time, because its accessibility to sea-going vessels of 500 to 1000 tons' capacity will fairly counterbalance the moderate cost encountered by deep mining. The average distance from the principal mines now to James River navigation at Richmond, or Osborn's, or Port Walthall below it, is only 13 and 24 miles respectively.

The same coal, but of an inferior character, being very much contaminated with iron pyrites, has been mined near Farmville. Several seams from one and a half to six and a half feet have been partially explored. It has also been found in that part of the western belt extending into North Carolina from Danville.

Although no coal has yet been found in the largest belt in this State, namely the Potomac deposits, it is a matter worthy of inquiry, why should coal not exist in this same formation in so extensive a deposit, when it is found in such small patches as the Deep Run, the Farmville, and in the extreme southern end of the belt in the Dan River deposits? The foregoing may serve as a guide in the investigation of this question. The vital importance of a discovery

of coal here can readily be seen by noting the geographical position of the belt, in close proximity to the seat of government, and to excellent deposits of iron ore, which could be reached by railroad improvements already established.

As has been said formerly, no iron ores, at least in sufficient quantity for practical purposes, have so far been discovered in the Richmond deposits. But since the coal would furnish a good fuel after proper preparation, it is of importance to look for the other important material for the manufacture of iron. This could be at present found upon two lines of public improvement. The first and most important will be along the James River and Kanawha Canal, upon the line of which, or close to it, brown and red hematites, specular and magnetic iron ores of excellent quality, from within 50 to 180 miles above the coal-bearing rocks, can be mined in large quantities, at low prices. Upon that line very good limestone can also be obtained at very low cost. The line of the James River would therefore be the most available for the manufacture of iron, at a reasonable cost, along the northern part of the basin. Upon the line of the Richmond and Danville Railroad, in connection with the Mississippi, Atlantic and Ohio Railroad, or the projected branch into the counties of Henry, Patrick, and Franklin, are found excellent specular and magnetic iron ores, which would supply the middle and southern part of the basin, although probably at a little higher cost, according to freight charges.

Another material of economical value may be found in the fire-clay and shale, which would form an important item in ceramic manufactures. As various qualities, from a light yellowish-gray, or nearly white, to those of red color are found, the manufacture of pottery, firebrick, or common brick and terra cotta, in connection with a low-priced fuel, would be remunerative, and at the same time furnish a new source for the use of coal.

The sandstones of this formation have been used for building purposes, and if selected with proper care, furnish a sufficiently firm material. It is necessary to avoid those in which the feldspar has a great tendency to decomposition, as they will weather and decay more rapidly. Where some of the thicker strata of limestone approach the outcrop use could be made of the same, although, so far, no attention has been paid to it.

A great source of lighting and lubricating material is stored away for future generations in the highly bituminous slates, which frequently occur in very heavy strata, and near the surface. As long

as the petroleum wells furnish this material at so low a price, of course no attempt to compete with them could be successful. But, nevertheless, a test of their real value in carburetted compounds would be a matter of great interest.

The pyritiferous slates, such as occur in this formation, would be used in other countries probably for the manufacture of copperas, alum, etc., as, for example, at Pardubitz, in Bohemia, while here they will for a long time to come only be a source of nuisance.

In concluding this paper I can only heartily echo the expressions of Mr. Macfarlane in "The Coal Regions of America," namely: "We have often turned with a sort of wonder to regard the Richmond coal basin. Its history is very strange. It was one of the earliest opened by the miner. It is the solitary one at tide-water, and near a State capital. It contains several beds of coal, and one of these is sometimes of great thickness; it is mined by shafts, on the English plan, and affords a variety of fuels, ranging from gas coal to native coke. One would have expected its complete development long ere this," etc.

The following statistics from the same volume show how slow its development has been:

	Square miles.	By Railroad from tide-water.	Prod. in	Tons.	Prod. in	Tons.
1. Schuylkill basin, Pa., . .	146	93	1822	1,480	1872	6,469,942
2. Lehigh basin, " . .	128	113	1820	365	1872	3,743,278
3 Wyoming basin, " . .	198	125	1829	7,000	1872	8,812,905
4. Cumberland basin, Md., .	27	186½	1842	100,000	1872	2,355,471
5. Richmond basin, Va., . .	189	13 to 24	from 1822 to 1842	1,925,000		
			1843	95,606	1872	95,978

While the Northern States have kept pace with the times, the Southern States have remained stationary, being satisfied to rest upon the laurels of their forefathers. Therefore this oldest of our coal fields is yet to see its best days.

Imperfect as this present description of the Mesozoic formation must be, it would be gratifying to the author if such practical researches as have been embodied in this paper would be followed up to a thorough and complete knowledge of this formation, which may yet be of great value to the eastern part of the State of Virginia.

PHILADELPHIA, February 21st, 1878.

COPPER MINING ON LAKE SUPERIOR.

BY PROFESSOR T. EGLESTON, PH.D., SCHOOL OF MINES, COLUMBIA COLLEGE, NEW YORK CITY.

(Read at the Amenia Meeting, October, 1877.)

THE copper-bearing rocks of Lake Superior are composed of a series of metamorphic rocks, comprised under the names of amygdaloid and conglomerate, in which the copper and silver found with them are pseudomorphs. These rocks, generally, have well-defined walls which cause them to separate easily. Generally, the country rock is sterile, but it occasionally rises into the copper-bearing rock, and then carries copper. Usually, the amygdaloids carry copper, and the greenstones or melaphyres which encase them do not.

There is a very generally received opinion that the copper in these beds occurs in shoots. This does not appear to be proved, though the opinion seems to have some foundation from the experience of the Calumet & Hecla Mine, where a body of poor rock has been left, which, on the mine map, shows a general direction. The theory may be true of that individual mine, but too little work has been done in the other mines to draw any decided conclusion. The copper is very unequally disseminated in the rock, if any given piece be taken as an example, but, if the whole copper-bearing series be considered, its distribution is uniform. It may prove that there are certain directions in which the copper has been deposited more abundantly than in others, and these may be found to correspond with certain geological causes, but up to the present time the knowledge gained is not sufficient to warrant any general conclusion.

These rocks are supplemented by a series of true fissure veins, of which there are several systems, making the amount of native copper very large. Unfortunately, except in the fissure veins, known as "mass-mines," the copper is so scattered through the rock, and is in such a fine state of division, that, although it is not always difficult to mine, it is always difficult to dress it sufficiently to make it pay.

The metal is so uniformly distributed through these copper-bearing rocks that detached pieces, called "float," are found in digging on almost any land in the country. These pieces vary from very small fragments, weighing not more than a few ounces, up to many pounds. In one instance, in making an excavation for a cellar of a

house, a piece weighing 1500 pounds was found. This copper is from 90 to 95 per cent., and, in detached pieces, even purer, and has evidently been deposited by electro-chemical action, having replaced parts of the rock, atom by atom. This phenomenon has taken place in all the different characters of deposits. I have had sections made of "barrel-work," from both the amygdaloid and conglomerate mines, which show the rock in all stages of impregnation. One from the Franklyn mine shows the copper in a leafy state, replacing the chlorite, so that when the chlorite not transformed is picked out the rock is nothing but a succession of hollow shells of copper. Not more than 40 per cent. of this mass was copper, and the rest was the more or less altered iron chlorite, known as delesseite. Another, from the Calumet & Hecla Mine showed the paste of the rock completely transformed into copper, leaving the crystals of quartz and feldspar intact. This piece was almost pure copper.

This condition of things characterizes the amygdaloid and conglomerate beds, and is in them in every possible stage of development, and gives rise, in both classes of rock, to very thin leaves which float on the water and are carried off in the process of dressing. The change of the rock into pure copper has not taken place to any great extent in these two kinds of veins.

The amount of copper in the rock varies from less than 1 per cent., as in the Atlantic, to 4 and 5 per cent., as in the Calumet & Hecla, which is the richest of all the mines; the yield of this mine for the year 1876 was 4⅞ per cent. mineral.

The strike and dip of the strata is very nearly uniform. At Portage Lake they have a strike of 35°, and a dip which is about 55°, which in the rest of the district rarely falls below 30°.

The amygdaloids vary but little in their constitution. They have been carefully studied by Professor Pumpelly,* and all the changes given in minute detail.

The conglomerates are found in every possible condition, from a type porphyry of large grain, with pebbles of from two to three inches in diameter, to a very fine-grained one, which is frequently transformed entirely into metallic copper. This rock, called the "sandslip," is from three inches to twelve inches thick in the Calumet & Hecla and the Alouez mines. At other times the whole rock is entirely decomposed into a hard clay, sufficiently plastic to be with difficulty compressed by the hand, but easily cut with a knife, retain-

* Proceedings of the American Academy of Arts and Sciences, vol. xiii.

ing exactly the colors of the rock, and the shape and colors of the crystals of quartz and feldspar. In the vicinity of Portage Lake the conglomerates are entirely feldspathic, but from the Calumet & Hecla on they are highly quartziferous.

There is a theory that the conglomerates, when they are of fine grain, will be rich, which is not entirely to be depended upon. It is true that the finer the grain of the rock the more copper there will be likely to be in it, since the deposit seems to be more readily made in the paste of the rock, and for that reason a given cubic foot will contain more copper, since the larger pebbles are usually barren. Occasionally, the "sandslip," which is the conglomerate in the condition of very fine grains, is completely transformed into metallic copper, but this is an exception, as is also the transformation of the pebbles into copper. The fineness of the grain may be said to be a favorable indication, but the pillars of poor rock left in the mine are not usually of any coarser grain than those extracted.

There are fifteen different conglomerate beds, which are recognized by their position in the general geological section of the country, all but four of which have been found by explorations to continue through the whole of the copper region of the promontory of Lake Superior. All but five of these have had workings upon them, but the only paying mine on them is the Calumet & Hecla. They were formerly considered as barren of copper, and for a long time received no attention from mining men. At the Nonsuch Mine the copper is found in very thin flakes, scattered through a bed which is 14½ feet thick. This is divided into three sections: the upper one is 6½ feet, and is said to contain 1½ to 3 per cent. of copper; the middle one is slate, 5 feet thick, but poorer in copper; the lower one, 3 feet thick, contains 2 per cent. of copper, and carries pockets rich in silver. The mine has only just been opened, and although extensive preparations had been made to work it, they were brought to a standstill by the death of the president of the company.

The amount of copper contained in these rocks is very variable, but as the amygdaloid is easily crushed the selection is not very carefully made. An exceedingly poor rock, as at the Atlantic Mine, which yields only ¼ per cent., can be worked. This is not true of the conglomerates which, on the contrary, are very hard. The rock must be richer, and the pieces have therefore to be carefully picked. The exceedingly favorable showing of the Atlantic, which is an amygdaloid mine, is owing partly to the fact that the ore is much

more easily mined than in the conglomerate beds, but is also in part due to its excellent management.

All of these mines produce more or less copper in lumps, which, when of sufficient size to be handled, is called "barrel-work," to distinguish it from that produced by the stamps, which is called "stamp-work." These masses of copper vary from the size of a pea up. Masses weighing as high as one ton have been found in the conglomerate mines, but this is unusual. When slips have taken place in the hanging wall of these mines, the copper is deposited between the layers of the slips in thin sheets, which look as if they were rolled out. Many of them have been taken out from the Calumet & Hecla two feet square. They could probably have been taken out much larger but for the difficulty of handling them, for as it is not possible to separate all the rock, the sheet breaks or tears with its weight. It requires great judgment in the mine to determine what rock shall be brought to the surface and what left in the mine. The eye frequently fails to detect anything in the poor rocks, but by running the fingers gently over their surface, the miner soon learns to detect the slightly projecting pointed pieces of copper from the inequalities of the rock, and even to form an approximate judgment of how much it contains.

The methods of mining which will be described are, those of the ancients, which will be passed over with only a notice; those used in the fissure veins, or "mass mines," and those used on the amygdaloid and conglomerate beds.

The disposition of the copper in the mines causes several kinds of material to be sent to the smelting works: "mass copper" is the large pieces, from fifty pounds and upwards; "barrel-work" comprises the pieces less than about fifty pounds, which can be easily packed in barrels; "stamp-work," or "mineral," is that which comes from the dressing works. All the mines produce mineral and barrel-work. Mass copper comes, except occasionally, from the mass mines. The conglomerates produce but a small amount of barrel-work, while the mass mines produce a great deal. As all the mines produce mineral, it is by far the largest part of the copper treated in the smelting works.

The organization of the mines is generally the same throughout the district. It is usually arranged so as to separate the surface work from the mining proper, and differs only in non-essentials from one district to the other, in different mines. The chief man is the agent, who is responsible directly to the board of directors. Under him

are three officers, the head mining captain, the surface superintendent, or "surface boss," as he is generally called, and a physician. In a few exceptional cases, the head captain is, to some extent, independent of the agent, but this is not generally so. The agent makes all the contracts for supplies, and purchases all the materials for the mine. He conducts all the business of the office, having under him a force of clerks, more or less large, according to the business of the mine. Sometimes the surface contracts are made by the superintendent, but always with the approval of the agent. In the office the mining and surface work are always kept separate. The mine clerk has charge of all the books relating to the mine proper, keeps all the accounts of the mine contracts and a personal ledger account with each miner. These accounts, less the store charges, are settled once a month in drafts, which the men negotiate. Generally, very little money is kept at the mine, both on account of want of security, and because it is quite as easy for the men to negotiate their drafts as for the company to get the ready money. A miner desirous of leaving before the end of the month sells his verified account easily. In mines with full credit such an account will bring very nearly its face. They are, however, sometimes sold at a great reduction, when the credit is not good or a panic takes possession of the men.

The surface superintendent has under him a master mechanic or machinist, a head blacksmith, and a head carpenter, who have charge of the machinery, tools, buildings, and all the work of the mine, not immediately connected with mining. They take charge of all the ordinary repairs to the machinery and tools, cut and saw the timber, build and repair the houses, take care of the surface railroad, etc.

In some mines, in addition to these men, there is a farmer, who raises produce on the company's lands; but generally it costs more to raise crops than to purchase them in the open market. The store at which the men purchase their supplies is either kept by the company or let out by contract, with the agreement that the store accounts shall always be secured by the company to the store, and have preference over all other debts owed by the men.

The prices charged are reasonable, and are generally as low or lower than the men could obtain elsewhere. The men are not obliged to go to the store, though most of them do.

The companies generally own houses, which they let to the men with families at a low rent; some of these families take boarders, but most of the single men prefer to live in boarding-houses, which at some of the mines are kept by persons licensed by the company.

The houses let to families generally have a garden plot attached to them, which helps to keep the men quiet, as no one will give up a garden until he has reaped the full benefit of it.

Every large mine has at least one physician, who receives a salary. A certain sum is deducted from the pay of the men, each month, toward this object. This is generally double for men of family what it is for single men. Sometimes two or more mines employ the same physician, if they are within convenient riding distance the one from the other.

The head mining captain has entire charge of the underground workings. He is generally responsible to the agent, but sometimes to the company. He usually has under him at least two other captains, one for the day and one for the night shift, who work alternate weeks on the day and night shift.

The miners generally work by contract, usually on short times, but the arrangement is a nominal one, for the contracts are made so that only a certain minimum per month shall be earned. If it is found that more is being made, the price of the next set of contracts is lowered. The head mining captain lets the contracts on his judgment of the rock, generally made by sounding it with the head of a pick; judging by the sound how firm the rock is, he lets the contract according to its solidity and the ease with which, according to its position, it can be detached. This letting of contracts requires not only experience but great judgment on the part of the officer, but the company always has control of the matter, for if by the books at the end of the month it is seen that the mining captain has made a wrong estimate, the price is lowered at the next letting. The contractor selects his own men and works in partnership with them. They receive their mine supplies from the mine, and are charged with them. The steel is weighed at the commencement and the end of the contract, but the mine blacksmith does the sharpening at the expense of the mine. When the contract is finished it is measured by the head captain, or one of the captains, and reported to the clerk, who accepts the captain's report as correct and credits the amount due each man on the company's books, subject to reclamations, which in dull times are not often made. The hours vary according to circumstances. The shift is generally twelve hours, but for work of a special nature eight-hour shifts are made. In most of the fissure veins very careful mine surveys are made and kept up, so that the map is a record of all the accidents to the vein which have been shown in the mining. In many of the other mines

the mine map is simply a plan of the foot-wall, which serves no other purpose than to give a general idea of the progress of the mine.

ANCIENT MINING.

Mining in the copper region of Lake Superior has been carried on from a very remote period, dating at the least five hundred years before the discovery of this country. This date is assigned from the age of trees which have grown over the explorations. The methods used by the miners of that time were very rude; they simply followed the vein matter with copper tools and stone hammers, using wooden shovels to move the broken rock, and wooden bowls and bark launders to free the mine from water. They did not want, and were unable to handle, pieces larger than a few pounds, which they took as they found them and beat out cold into shape, leaving the silver attached to the copper. They seem to have had no knowledge of dressing, which would have been of no use to them, as they were ignorant of the fact that copper could be smelted. Their excavations were usually open to the air, and never more than twenty to thirty feet deep; in a few instances only was any rock left overhead. They generally followed the outcrop of the vein, but made no attempt to follow it in depth. Most of their excavations were so filled by decayed trees and dirt, that in a thickly-wooded country they for a very long time escaped observation. When attention was once called to them they were explored, and many of the best mines in the early history of the present development were located upon them. This is true of the Central, in the Keewenaw district, where three large masses were found uncovered, two of them overlapping each other, amounting to 53 tons in weight. The thin edges of these overlapping masses had been hammered so that they were very much bent before it was decided to abandon them. At the Minnesota mine, in the Ontonagon district, they found a mass of six tons, which had been raised on a cobwork of wood several feet before it was abandoned. The wood was still sound, but when brought to the air it cracked and rapidly went to pieces.

The veins worked by these miners were not chosen at random, but were selected with a judgment and skill to which the prosperity of some of our mines of to-day are to a great extent due. Nothing is known of the people who did the work, except the scanty traces which they have left behind them in the mines, all of which seem to have been abandoned in the full tide of prosperity, and are left as though it was evi-

dently the intention of the people to return to them. From the methods adopted and the severity of the climate, it is evident that they were mined only in the summer season, for in a country where the average depth of snow is from four to five feet, such workings would have been impossible in the winter. Who these ancient miners were, or where they lived during the rest of the year, we can only conjecture. All that is known of them was published in the early volumes of the *Smithsonian Contributions to Knowledge*. Personal inspection of many of their works show them to have been a people of a certain amount of civilization. They had an art of hardening copper, probably by hammering it cold, and a skill in using their tools, which makes us wish that we knew more of this race of miners.

MASS MINING.

The masses of native copper which are found in the mass mines vary very greatly in size. They are sometimes single masses and sometimes a succession of masses, held together by thin sheets or threads, and sometimes masses properly speaking. Most of the mines which have produced the largest masses are in the Ontonagon district. One was found in the Minnesota mine which weighed five hundred tons; one in the National, which, if it had all been got out together, would have weighed over one thousand tons, but the nature of the ground was such that it was cut up to extract it, and mined at different times. In the Keweenaw district the Central has produced several masses weighing over three hundred tons each; the Phœnix one of six hundred tons, and many over one hundred tons; the Cliff several of one hundred and fifty tons each. These are very large masses, and are only found occasionally. The average of those extracted will not weigh more than one to fifteen tons.

To mine such large quantities of metallic copper is very difficult, and to get them into a shape to use commercially is still more so. They are sometimes from ten to twenty or even fifty feet in length, from ten to twenty-five feet in width, and from an inch or less in thickness on their edges to five or six feet.

The masses are often discovered by what are called "horns." These horns are projections of native copper, which are generally, to commence with, not much larger than the thumb, which protrudes from one of the walls of the vein. When such a projection as this is found it is usual to explore it to find out its extent. But many very large masses of copper carry no horns, and are consequently smooth on their surface and give no indication of their presence, so

that systematic methods must be used. The usual method of mining in mass veins is to run a drift on the hanging wall of the vein from ten to twenty feet or more in length, and then take out the whole of the vein matter, the rock of which is sorted; but the larger part goes to the stamps to be crushed and concentrated.

This work is much more difficult than it would at first sight appear, on account of the fact that the surface of a mass is often not only very uneven, but is frequently attached to the rock by strings which vary in size, and are often larger than the arm. The masses vary greatly in thickness also, and sometimes appear to be a large number of masses joined together by sheets or strings, which are often so thin as to be easily cut through by a blow of the pick. The vein must be systematically explored by endeavoring to drill across it, at very short intervals above and below, for ten or twenty feet or more, stopping when copper is reached, until the drill, going deep into the vein matter, shows that an edge of the mass, or a thin spot in it, has been reached. This hole is blasted. If the mass is not very large or thick, although the copper is not thrown down, a crack is made. This crack is then tamped tight, filled with powder and fired. This is repeated until an opening large enough to introduce five to ten kegs of powder is made.

This method is, however, applicable only to small masses much mixed with rock. When the copper is thick it will not answer, and it is necessary, then, to drill behind and blast so as to crush the rock and make a place for the powder. In drilling these holes for blasting out the vein matter, if the drill strikes copper before the hole is deep enough to blast, another hole is drilled a few feet further on. If this strikes copper, holes $1\frac{1}{2}''$ in diameter are drilled on all sides to the number of twenty or more, the whole length of the vein as it stands. This locates the mass. The miners then go back to the place where the vein was last blasted out, and with drills, $2\frac{1}{2}''$ to $2\frac{3}{4}''$ in diameter, and from $4'$ to $7'$ long, try to get behind the mass. These holes are filled $\frac{3}{4}$ full of powder, tamped with fine stuff, rammed as tight as possible, and then fired. If this does not throw the rock, it is certain that there is a mass more or less large to be dealt with. Very often the holes which have been fired, although they do not throw down the copper, crush the rock behind it, so that with sharp-pointed bars an opening sufficient to introduce one or two kegs of powder can be made. If this does not throw the copper down, it is left in place until stoping uncovers more of it, and the drift is pushed forward. When ready,

a stope four feet six inches high is carried on the hanging wall and the rock levelled. The vein stuff so removed is sent to the "mills" to be carried to the stamps.

When the masses are very large these methods are not applicable. The face of the mass is then disengaged as before, and a small drift is run on the foot-wall so as to disengage a certain portion of the back. This tunnel is not carried to the full extent of the length of the mass. This exploration having been finished, the depth of the copper in the middle will be known, and its weight can be approximately told and the charge of powder determined. In making this tunnel the copper is followed where the mass is thick enough, but where it thins out some rock is left as a security against blowing out at that point. Exactly how this work is to be done must be determined in each individual case. If the mass is of moderate size, and the hanging rock is strong and requires no timbering, the whole mass may be uncovered and blown down at one time. If, however, the mass is a very large one, and the hanging wall requires support, it may not be expedient to remove more than a small fraction at once. In such conditions it requires a great deal of judgment to determine what is to be done. When the drift is ready, it is charged with powder and its mouth closed with sand or sand-bags, tamped tight with sand and clay, and fired. The amount of powder used will depend not so much on the size and apparent strength of the mass as on the conditions under which it is found, and on the nature of the rock. It will generally be from five to twenty-five kegs. As the firing of such a quantity of powder will render the air thick for some time, no matter how good the ventilation may be, this work is done usually on Saturday evening when the last shift comes up. By Monday morning the air will be good again. A seventy ton mass in the Phœnix Mine was thrown down with twelve kegs in August, 1876; but there can be no general rule laid down. It is a serious matter to determine the amount, for if the powder is not in sufficient quantity to throw the rock, it may do serious damage. Captain Parnell cited to me an instance in the National Mine where five kegs of powder were used on the fourth level, two hundred feet from the shaft, which, when exploded, proved insufficient to detach the mass, but threw over the men in a drift one hundred and fifty feet distant, bruising them badly, and threw off the boards of the shaft-house at the surface. Powder is always used; other explosives, though more powerful, are not in favor, and therefore do not succeed so well.

The powder will either disengage the mass entirely, or loosen it so

that the rock at the edges may be disengaged by picks or bars. When free the mass falls into the position which has been assigned to it. Sometimes an excavation has to be made into which the mass may fall, so that there may be perfect ease and freedom of movement in cutting it up. This is, however, not generally done until it has been blown down and every means has been resorted to to reduce the mass to small pieces without it. Often the sand-blast has shaken the mass and the rock attached to it so much, that by block-holing and cutting off small pieces here and there, the size is reduced at very small expense, so that the cutters can work without having any room prepared. Sometimes a second sand-blast is put in before going to the expense of blasting for room, but when the mass is solid, the rock around it must be blasted out until the men can swing their hammers easily. When this place has been prepared the mass is raised by jack-screws and propped up with billets of wood, so as to be in a convenient position to be cleaned from rock with picks, as far as practicable, in order to be cut up. When sufficiently clean, it is delivered to the cutters, a party of three men, two striking and one holding the chisel, which is sharpened both ways in the direction of its width, which is generally half an inch; its thickness is generally one and a half inches.

The bit is fifteen-sixeenths of an inch wide, and is bevelled both ways. As the chisel has to be turned when a chip is taken out, it is necessary to use great care in getting the corners of the bit of equal distance from the centre of the chisel, so that it will always cut the same distance from the centre of the cut, and keep it perfectly straight. If the chisel was made like an ordinary chisel the difficulty of getting the two corners of exactly the same temper would be very greatly increased, as would also the difficulty of cutting. These chisels vary from one to six feet in length, depending on the thickness of the mass. Six feet is an unusual length, but was used on a six hundred ton mass found in the Phœnix mine in 1869. The usual length is not over five feet; the general rule is to make the chisels 18″ longer than the thickness through which they are to cut. The sledges which are used weigh seven pounds and the handles one and a half pounds; the total weight is thus eight and a half pounds. The handle is 2 feet 6 inches long; the head is generally $5\frac{1}{2}$ inches long and $2\frac{1}{8}$ thick, it rounds from the centre of the head to the face, which is one inch square; the helve opening is 2 by $\frac{1}{8}$ inches. The hammers were formerly very much heavier, the head weighing as much as ten and twelve pounds, but it was found that not

as much work could be done with the heavy as with the lighter one. A hammer of the same weight is used for drilling the rock as for cutting the copper. The mass is first lined off so as to be cut up into pieces of a convenient size for handling in the mine. The size of these masses is regulated by the smelters, who require that they shall be of such dimensions as to be easily charged in their furnaces. Pieces as heavy as fourteen tons, cut from the six hundred ton mass, have been sent from the Phœnix Mine, but that is unusually large. If, however, by cutting off a few pieces a mass of eight or ten tons is left, it is sent to the smelting works. This saves a large amount of cutting. Generally, however, the pieces sent from the mines will weigh between two and eight tons. As the pieces are cut off they are moved with winches and tackles to the "mills," and let down to the levels to be removed to the surface. Very large pieces are hoisted through the shaft with a heavy rope kept for this purpose. At the Phœnix Mine it is of hemp, 5″ in diameter.

When the parts to be cut off are determined, the workmen commence with a short chisel, its length depending upon the thickness of the mass at that particular point, and cut out a band of copper the width of the chisel, and about one-eighth of an inch thick through the whole thickness of the mass. The cut is to go through and across the mass in a perfectly straight line. After the cut is about six inches in length it will generally be so deep that it will be impossible to see below it, and for this reason the mass is always raised and a candle placed just at the bottom of the slit, so that the workmen may see what they are doing. The time that will be taken in cutting up such a mass will depend upon its thickness. The work is exceedingly difficult, and is a severe strain upon the endurance of the men. To avoid the shock and to protect his hands the holder usually wears a heavy mitten. It does not require so much strength as skill to keep the chisel constantly at the angle which will cut the copper. This angle is learned by experience, and although it is always the same, a green hand will often fail to cause his chisel to cut, or make it cut out. The men work their full shift, but it is generally conceded that the holder, although he must be very skilful, has the easiest work. The holder takes good care to see that when they are near the end of a chip a block of wood is placed under the cut, so that the head of the chisel, when it cuts through, shall not fall upon his hand, or the point of the chisel be dulled by striking a hard substance. Not infrequently two or more parties work on the same mass; they usually work eight hour shifts. In cutting up the five hundred ton mass at the Minnesota mine, there were as many as

nine parties cutting each shift, or eighty-one men in twenty-four hours. Such a number could only work at first, for as the outer cuts were finished the parties had to be removed, but a large force can always be kept employed on a very large mass until it is entirely cut up. The quantity that three men can cut in a day will generally be about three-quarters of a foot, which, supposing the mass to be one foot thick, would bring the cut back nine inches. The contracts are let by the foot. When the miners' wages are about $50, the contracts are let at $12 per foot, the miners furnishing their own lights. Skilled men will make about $2.50 per day at that price. The responsible man in the work is the holder; the amount of work done in a day depends almost entirely upon him. A good chisel-holder is an expert, and consequently a difficult man to get; under him the strikers work hard, but accomplish a great deal. A poor holder will make the strikers work quite as hard, but they will make very little progress in the cutting. A good holder, while he keeps the strikers in constant activity, will carry no more on his chisel than they can keep constantly driving. He will keep his cut perfectly straight from the top to the bottom, so that there will be no shouldering on the side, or digs into the mass. A poor holder will have too light a chip, in which case the chisel will be out before it is halfway through the cut, or too heavy a one, in which case the work of the strikers is greatly increased without its efficiency being as great as with the proper depth of chip. It was formerly the practice to make the chip of equal thickness; they are now made feather-edged or wedge-shaped. This is much easier on the strikers, requiring much lighter blows, and is much more effective. A good holder will take a chip out of both sides of the cut, and then run his chisel through the centre and take out the ridge in the middle. The cut is in this way made a little larger than the chisel, and if, by accident, he should cut out, he can take it up where he left off, whereas, by the old method, he would have to go back to the beginning.

The time which is required to disengage and cut up a large mass is so great that it usually costs as much, or more, to get it out of the mine as it would to stamp the same weight of copper from a low-grade rock. The five hundred ton mass of the old Minnesota Mine required eighteen months' constant work before it was all removed from the mine. An ordinary mass of fifty to sixty tons will require the labor of three men, working at it continuously, for from three to four months, before it is ready to come to the surface. Once extracted, the mass is still not in condition to go to the smelting works,

as it is associated with a large quantity of rock, which is chiefly calcite. In order to get rid of as much of this as possible, the pieces are placed together in kilns, and fired with wood so as to heat the copper to quite a high heat, and are then extinguished with water. In this way the rock becomes very friable, and is picked off with picks and tools made for the purpose. It is for the interest of the proprietors to clean the copper as much as possible, since all that is sent to the smelting works is weighed as copper, and is paid for as such.

The pick which is used is the ordinary miner's pick, which is made with a pall or head on one side, to be used in driving gads or wedges. From the point to the eye it is 11 inches. The eye is $2\frac{1}{8}$ by $\frac{7}{8}$ inches; the head is 3 inches long and $1\frac{1}{4}$ square on its face. The pick weighs $4\frac{1}{2}$ pounds. The handle is 2 feet 6 inches long and $1\frac{1}{2}$ inches at the end, and weighs $1\frac{1}{2}$ pounds.

CONGLOMERATE AND AMYGDALOID MINING.

The system of mining differs from the foregoing but little except in the first layout of the mine. In the conglomerate and amygdaloid mines shafts are sunk in the copper-bearing rock, the number depending on the size of the mine. The Calumet has eight, the Allouez and the Osceola three each. The distances between them vary from three hundred to eight hundred or nine hundred feet. Heavy walls should always be left on the sides of this shaft, but it has not always been done, and the want of them will always be a source of increasing expense to the companies who have made the mistake. Levels are then laid off from the shaft, generally ninety, but sometimes one hundred feet apart, which connect the shafts. Generally, the levels are twelve feet by twelve feet, but their height depends on their finding an easy and secure separation to form the roof. Sometimes the thickness and richness of the bed are sufficient to allow of the whole of it being worked at once, as in the Calumet & Hecla. At others, only part of the bed is worked, as at the Allouez, where the bed is twenty-six feet thick, but only twelve feet of it is worked. To facilitate the driving of levels winzes are sunk between the shafts. In the fissure veins the shafts, sometimes vertical, sometimes inclined, are not generally sunk on the vein, and the levels and stopes are made usually in the hanging wall. The shafts are usually twelve feet wide by six feet high, and are divided into two parts by a 2″ plank partition. One of these serves for the extraction of the ore, and the other for the

passage of the pump and the men. The levels are always run so as to convey the water to a single sump at the foot of one of the shafts. The mines are not, however, very wet. For those of ordinary size, a small pump, working only part of a day, will keep the mine dry when the ground has not been affected by caves which let in the surface water.

The method of mining is overhead-stoping, which is done by hand or compressed-air drills, according to the situation of the place to be worked. As soon as the mine is opened the rock is extracted at once, commencing from the shafts and winzes, working both sides of them. If the rock next the shaft does not contain copper it is left, but otherwise it is taken out. The roof must be then supported by timbers. No attempt is usually made to fill up the space left by what is taken out of the mine, unless the material to do it with is close at hand. In the bed called the "Ashbed," at the Copper Falls Mine, immense chambers, seventy-five feet square, have been left without any support of any kind. The roof is very firm and has stood for many years, but there is no excuse for such methods, for eventually the roof must yield. The result in the Minnesota Mine is, that if the mine were pumped out there is little probability that it could be worked. If pillars had been left, the mine would probably have still been capable of being put in working order. The result of the system is that that mine now can only be worked on a very small scale. There must come a time when the wooden props will crush, and then the future of the mine will be compromised, even supposing that the shaft or level is kept in order. If a timber be replaced, it must be every time shorter, as the roof descends the surface-water is let in, and constant expense of repairs necessary, as witness some of the first levels of the Calumet & Hecla. After a certain time the opening will be either too low to work in, or the roof must be taken out, a hazardous and expensive operation in yielding ground. If the proper pillars had been left, the workings would have remained good for years.

Each company is obliged to own woodland and to select the best of their wood for supports, or, as is the case of the Calumet, go long distances, and raft their wood. The method is otherwise bad, as when the ground begins to crack, the superficial waters must come in. The present inconvenience is not great, as the roofs are generally very solid, but on account of the use of this method, any attempt made to work on a large scale the Minnesota Mine, which has lain idle a number of years, would to-day probably prove a failure.

In looking at the vast chambers in many of the mines without any support of any kind, one has an involuntary feeling of dread lest the roof should cave. The solidity of the ground is remarkable, but it must one day give way. The immense amount of rock which has been thrown on the burrows, suggests the advisability of filling the old workings of the mine with it, and this has sometimes been done in a very limited way. If it had been adopted as a policy at the commencement of mining operations, much would have been saved by it. Generally, the roof is so solid in the conglomerate, that no support of any kind is needed in the ordinary stopes, but occasionally the hanging-wall is insecure from slips, which have made the rock friable, with large cleavage planes; the roof must then be supported. This is done with heavy timbers, which in the Calumet & Hecla mines are sometimes two to three feet in diameter and are placed almost in contact.

The stopes always have communication with the levels below. To make this, heavy timbers are footed into the foot-wall, and dropped against the hanging-wall, at an angle of about 45° from the plane of the level. In the Phœnix Mine they are placed six feet from centre to centre. Every ninth timber is placed a little further apart, and the space between laid out as a "mill," which is carried up with the stope, so that every stope has one or more mills. These mills are 7 feet by 5 feet.

The drills which are used for soft rock are made of one-inch octagon steel, the bit of which is forged to $1\frac{1}{2}$ inches. In the conglomerate the bit is forged to only $1\frac{1}{8}$ inches. One man holds while two strike. A one-man drill is rarely used, except in block-holing, or in preparing the places for the heavy timbers to support the walls.

Cartridges are not used, though they would save much time, and allow of much more work being done. The use of fuses is universal. Three men will easily make three holes of 2 feet to 2 feet 6 inches in a shift of eight hours in moderately hard rock. In conglomerate they cannot do anything like as much. Wherever it is possible, compressed-air drills, generally of the Burleigh or Winchester patterns, are made use of, but a large amount of hand-work has always to be done. Powder is used exclusively in blasting. The miners do not like dynamite, nor any of the modern explosives, as they say the air after a shot gives them a headache. The shots are fired, as much as possible, at the end of a shift, so as to give the air time to clear before the other shift comes on.

The pick which is used is the same as the one described as being

used in the mass mines. It has on one side the pick, and on the other the head or pall, which is tempered to drive a "gad," or steel wedge. It is also also used to sound the rock and ascertain its solidity.

The number of men and their wages, employed at the Central, a mass mine, is given below:

	1875.	1877.		1875.	1877.
Miners, . .	158	195	Wages per month,	$52.65	$49.80
Surface men, .	89	85	" "	43.14	40.43
Stamp men, .	15	12	" "	44.57	47.02

There were in the Allouez Mine, in July, 1876, 282 men in 24 hours. They worked 10 hours to a shift; from 7 A.M. to 6 P.M., a day-shift, and from 7 P.M. to 6 A.M., a night shift. There were 122 men stoping, 42 drifting, 18 sinking.

There were three rock-drilling machines, with six men on each, making for the machines eighteen men; thirty trammers, who wheel the rock; twelve block-holers, who split or fire the rock; eight landers and bell-ringers; four timbermen and helpers; sixteen laborers, and three mining captains.

The average number of men in the mine throughout the year was 318 per month. The average wages of the men, including mining captains, was $47.10. These costs include the cost of hoisting and pumping. The total cost of these men and the number of days' work done, in the Allouez Mine, for July and August, 1876, by each class of men, is given in the table below:

NUMBER OF MEN EMPLOYED BY THE ALLOUEZ MINING CO. IN THE MONTHS OF JULY, 1876, AND AUGUST, 1876.

Miners on Contract,	175	183
Mining Captains,	3	3
Miners,	20 1/2	16
Machinists and Helpers,	6 5/8	7 3/8
Carpenters,	6 7/8	9
Timbermen,	2	2
Laborers and Teamsters,	70 1/8	86 1/2
Firemen,	9 1/2	9 1/8
Blacksmiths and Helpers,	7 1/8	8 1/2
Framers of Skips,	36	35 1/2
Landers and Bellringers,	8	8
Engineers,	7 1/4	7 5/8
Foremen,	3	3
Surface Captains,	1	1
Watchmen,	2 3/8	2 3/8
Masons,	2	1
Brakemen,	1	1
Trackmen,	5 3/8	1
Agents and Clerks,	3	3
Head Runners,	2 1/8	2 1/2
Stamp Feeders,	6 7/8	7 1/4
Dressers,	17	18 3/4
Total,	396	417

The following table gives the cost of wages per ton of rock hoisted, and per ton of rock milled, at this mine, for July and August, 1876.

MINERS' WAGES AT THE ALLOUEZ MINES.

JULY, 1876.

	Number of Days' Work per ton of Rock.		Cost per ton of Rock.	
	Hoisted.	Milled.	Hoisted.	Milled.
Mining Captains,	0.0115	0.0159	$0.0500	$0.0691
Miners,	0.0780	0.1080	0.1153	0.1596
Machinists and Helpers,	0.0115	0.0159	0.0246	0.0343
Carpenters,	0.0078	0.0108	0.0175	0.0243
Timbermen,	0.0078	0.0108	0.0171	0.0237
Laborers,	0.0491	0.0680	0.0650	0.0900
Firemen,	0.0038	0.0053	0.0057	0.0078
Blacksmith and Helpers,	0.0154	0.0213	0.0367	0.0507
Framing Skips,	0.1387	0.1920	0.1909	0.2643
Supplies Used,			0.1378	0.1907
Total,	0.3241	0.4484	$0.6608	$0.9145

AUGUST, 1876.

	Number of Days' Work per ton of Rock.		Cost per ton of Rock.	
	Hoisted.	Milled.	Hoisted.	Milled.
Mining Captains,	0.0111	0.0151	$0.0481	$0.0656
Miners,	0.0594	0.0811	0.0888	0.1212
Machinists and Helpers,	0.0139	0.0190	0.0276	0.0376
Carpenters,	0.0037	0.0050	0.0058	0.0079
Timbermen,	0.0074	0.0101	0.0165	0.0225
Laborers,	0.0788	0.1075	0.1038	0.1416
Firemen,	0.0046	0.0063	0.0069	0.0094
Blacksmith and Helpers,	0.0157	0.0214	0.0386	0.0527
Framing Skips,	0.1318	0.1798	0.1835	0.2504
Supplies Used,			0.1482	0.2022
Total,	0.3267	0.4453	$0.6679	$0.9114

The cost of work in the Allouez Mine in August, 1876, per foot, was:

Drifting in 1875 and 1876, averaged,	$19.00
Drifting in conglomerate, with no foot,	35.00
Drifting in conglomerate, with a foot,	$18.00 to 20.00
Drifting on hanging-wall would cost about,	6.00
Drifting in winzes,*	17.00 to 23.00
Drifting in No. 2 shaft,	37.00
Stoping from No. 2 shaft, per fathom,	20.00 to 28.00
Sinking No. 3 shaft,	50.00
Sinking in 7th level,	25.00
Sinking in 6th level,	20.00
Sinking No. 1 shaft, in broken ground,	32.00
Sinking No. 2 shaft, for top,	30.00
Sinking No. 2 shaft, for middle,	34.00
Sinking No. 2 shaft for bottom,	36.00
Average, for sinking shafts,	33.30

* If the winze had no foot it would not be sunk.

The cost of mining at the Central is given below:

	1875.	1877.
Sinking in shafts and winzes,	$32.88	$33.60
Drifting on the vein,	12.07	11.53
Drifting on the conglomerate,	18.81	18.47
Stoping on the vein, per cubic fathom,	19.40	20.78
Stoping on the conglomerate,	32.45	21.70

The following table gives the cost of mining at several different mines:

COST OF MINING.

	Atlantic. 1876.	Atlantic. 1877.	Nonsuch. 1876.	Quincy. 1877.
Stoping, per cubic fathom,	$17 23	$16.24		$17.29
Drifting, per foot,	12.58	11.83	$7 00	11.22
Sinking, per foot,	30.00	36.00	12.00	13.44

The average number of contracts at the Allouez was 218, and the average wages of the contractors was $47.85. The following table gives the cost of mining, per ton of rock hoisted, and per ton of rock milled, at this mine, for July and August, 1876.

COST OF MINING AT THE ALLOUEZ MINE.
JULY, 1876.

DISTANCE.	Price per foot or fathom.	Number of Men.	Cost per ton, Hoisted.	Cost per ton, Milled.
Sinking Shaft,				
" Winzes, 48.5 feet,	$13.75	12	$0.1082	$0.1495
Drifting, 62.3 feet,	19.35	24	0.1776	0.2458
Stoping, 371.96 fathoms,	18.54	121	0.9845	1.3626
Cutting Plats, Casing and Dividing Shaft, and Blasting outside of level,		18	0.1084	0.1501
Cutting Fork,				
Miners' Wages and Supplies,			0.6608	0.9145
Total Mining Cost,			$2.0395	$2.8227
Powder, Fuse, Candles, Steel, etc., included in items above,			$0.3044	$0.4213

AUGUST, 1876.

DISTANCE.	Price per foot or fathom.	Number of Men.	Cost per ton, Hoisted.	Cost per ton, Milled.
Sinking Shaft, 5 feet,	$30.00	3	$0.0206	$0.0281
" Winzes, 21 feet,	17.00	6	0.0532	0.0726
Drifting, 131.2 feet,	19.74	42	0.3136	0.4279
Stoping, 369.63 fathoms,	18.96	129	0.9715	1.3257
Cutting Plats, Casing and Dividing Shaft, and Blasting outside of level,				
Cutting Fork, 11 feet,	20.00	3	0.0302	0.0412
Miners' Wages and Supplies,			0.6679	0.9114
Total Mining Cost,			$2.0571	$2.8070
Powder, Fuse, Candles, Steel, etc., included in items above,			$0.3343	$0.4562

The lighting of the mines is done exclusively by candles, which are surrounded by a lump of clay, and attached to the hat while walking, or to the wall when at work; they weigh about 1.5 ounces each. Four or five are burned during a shift. They are never burned out entirely. The ends are carefully saved, and in some mines are used to fire the fuses. The use of candles is universal. It would seem as though there would be an advantage in using oil, so far as the cost of lighting is concerned, but the habit of using them, and the convenience of attaching the candle anywhere with the lumps of clay, overcomes any advantage of economy which the oil might have.

The entry to the mines is usually by ladders, which are placed on the foot-wall. These ladders are made with wooden sides and wooden or iron rounds. Those with wooden rounds are made by contract at $0.06 per running foot. They are much easier to use than those with iron rounds, which, however, last much longer. As the incline of these ladders is about that of an ordinary stairs, they are not infrequently provided with a handrail, and used as stairs or ladder by the men as each one fancies. This has led in some of the mines, as in the Phœnix and Nonsuch, to the use of stairs, which are made of pieces of plank, fastened securely to the foot-wall with pieces of wood nailed on in such a way as to make a step eight inches wide, with a rise of ten inches. The wood for making the riser is only four inches wide, so that the beam shows under it. Such steps cost $0.10 per running foot, and are very easy to walk on. They last more than three times as long as the ladders, without repairs, which, when necessary are less expensive, and more quickly made, than those to the ladders, and, as the main beam does not have to be removed, can be very rapidly made. At the Phœnix, and formerly at the Central mines, the men are let into and taken out of the mine on a large step-car, thus saving the men, when the shifts are long, a great deal of time and fatigue. The Calumet & Hecla and the Central have man-engines; the one in the Calumet does not reach to the bottom of the mine, but goes only part of the way.

The rock is picked as much as possible in the mines, for which reason the very large pieces in the conglomerate mines are always block-holed and blasted in the mine until they are sufficiently small to be transported in the skip. The poor rock is left in the mine and is thrown against the stulls. The difficulty of selection in the mine, however, is such, that most of the rock is carried to the surface.

The first selection in the amygdaloid is made in the shaft-house. The rock is piled on a wagon and carried to the shaft; the skip is let down, so that the sides reach below the bottom of the rail; the rock is dumped into it and the signal given for hoisting by the signal-man who stands at the foot of the shaft. Another signal-man is stationed at the top of the shaft to give notice of the approach of the skip. This position requires a man of activity and intelligence, as any failure on his part to give the signal would cause the skip to go to the top, where it would be caught by the turn of the rails and the cable pulled in two. This accident happened twice in the course of ten days in one of the mines, breaking the iron rope and letting the skip down a distance of seven hundred feet, from which it came up with but few bruises, the greatest being the breaking of the cast-iron boss by which the axles are attached to the sides. The wood-work of the shaft was very much damaged, but fortunately no lives were lost.

The skips are made of half-inch rolled iron, riveted at the corners to angle-irons four inches wide by half an inch thick. Fig. 1 gives the details of the skip at the Atlantic Mine. The bottom is seventy-two inches long. It is thirty-six inches high and forty-two inches wide. The top is bevelled to the angle of the inclination of the shaft, so that it is only forty-eight inches long. The back is reinforced by three strips, one inch thick, the whole height of the skip, which are three inches apart. The middle one is six inches wide, and the side ones are five inches.

The wheels are thirty-six inches apart, the hind ones being placed as near the back as possible. The wheels are twelve inches in diameter, the hind ones having a tread of five inches, while the front ones have one of only three inches, so that when it rises to the top it will fall through the tramway and let out the ore, while the hind ones are caught in curves of the rails. The axles are made of steel, two inches in diameter and five inches long, and are fastened in cast-iron bosses (Fig. 2), two inches thick and ten inches in diameter, which are riveted to the sides.

The skip is hoisted by a movable bail strap, c, four inches wide, and seven-eighths of an inch thick, which rotates on a pin, d (Fig. 3), which passes through the side of the skip, a, and through the fixed bail-strap, b. The movable bail thus rotates between a and b. The bail-strap is fifty-seven inches long from its point of rotation to where it is attached to the bail. The bail, e (Fig. 1), is forty-five inches long, four inches wide, and two inches thick, and is slightly wider in the middle, where the hole for the attachment of the rope

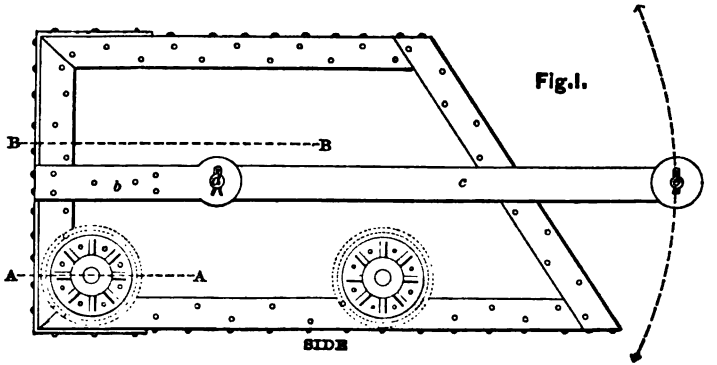

Fig.1.

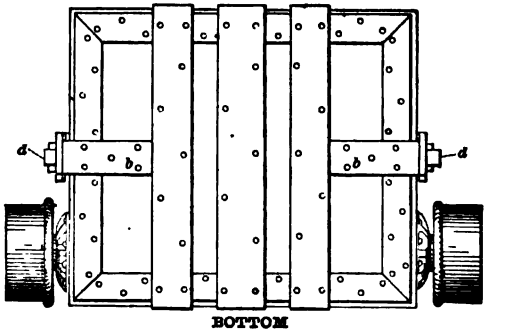

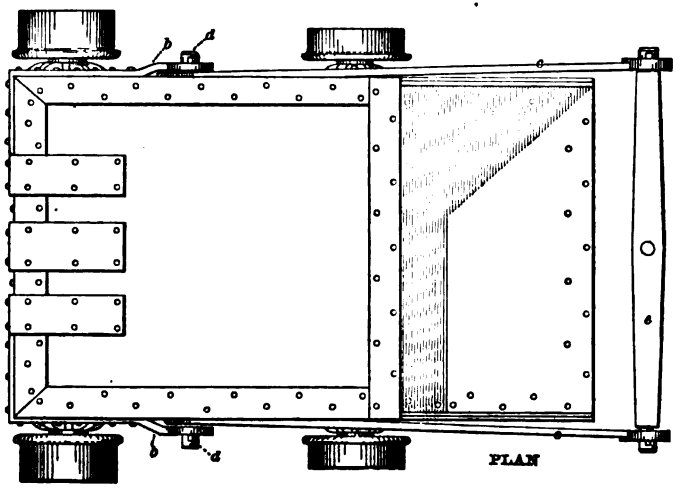

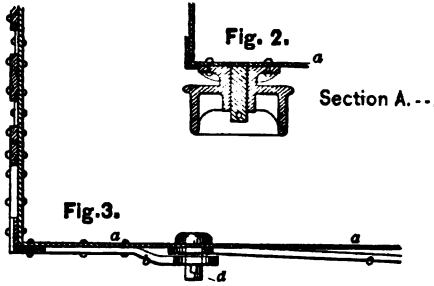

Fig. 2.

Section A.--A.

Fig.3.

Section B.--B.

a — Side of the skip
b — Fixed bail strap
c — Movable bail strap
d — Pin holding the bail
e — Bail

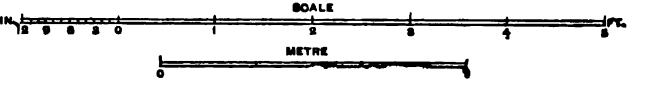

MINE SKIP AT THE ATLANTIC MINE

is made. It is attached to the bail by projections two and one-half inches in diameter, which pass through holes in the ends of the bail-strap.

When the skip is to stop at any level, a rest is prepared for it, which is removed when it is to pass below. A place is always cut out of the hanging rock for the miners to pass around the shaft. The shaft at this point is a frequent source of accident, from men walking into it, especially at those levels which are little used, and where a signal-man is seldom stationed. They are frequently so stunned by the fall that they become bewildered, and the skip passing up or down strikes and kills them.

The cables which are used for extraction are of iron or steel wire, and are wound around a drum of considerable size. Each level is marked on the rope, or on a tell-tale, where the engineer can see it. The velocity of the skip is regulated by a strap-brake, passing around the revolving drum. It is attached to a long lever of wood on which a man sits, bearing more or less of his weight, according as the velocity is to be greater or less. The skill with which they can regulate it is remarkable. In some mines, especially those with vertical shafts, the skip is allowed to fall with its natural velocity, but is stopped without much jar in a few seconds at the bottom. The cables are greased with coal-tar. As this substance is always acid from the process of refining the petroleum, this greasing often does more harm than good, as it corrodes the strands and weakens the rope. It would be very easy to saturate the acid, by adding lime and boiling before using, as is done in Pennsylvania, but it is not generally done.

The expenses of hoisting, per ton of rock hoisted and milled at the Allouez Mine, for two months of 1876, are given in the tables below:

HOISTING EXPENSES AT THE ALLOUEZ MINE.
JULY, 1876.

	Number of Days' Work per ton Rock.		Cost per ton of Rock.	
	Hoisted.	Milled.	Hoisted.	Milled.
Landers and Bellringers,	0.0308	0.0426	$0.0450	$0.0623
Engineers,	0.0154	0.0213	0.0308	0.0426
Laborers,				
Machinist,	0.0029	0.0040	0.0067	0.0094
Fireman,	0.0078	0.0108	0.0123	0.0170
Blacksmith and Helper,	0.0057	0.0079	0.0102	0.0141
Repairing Boilers,				
Supplies Used,			0.1048	0.1450
Total,	0.0626	0.0866	$0.2098	$0.2904

AUGUST, 1876.

	NUMBER OF DAYS' WORK PER TON ROCK.		COST PER TON OF ROCK.	
	Hoisted.	Milled.	Hoisted.	Milled.
Landers and Bellringers,	0.0297	0.0405	$0.0440	$0.0600
Engineers,	0.0157	0.0214	0.0311	0.0424
Laborers,	0.0019	0.0026	0.0029	0.0040
Machinist,	0.0028	0.0038	0.0065	0.0089
Fireman,	0.0074	0.0101	0.0125	0.0171
Blacksmith and Helper,	0.0055	0.0075	0.0104	0.0142
Repairing Boilers,			0.0201	0.0274
Supplies Used,			0.1096	0.1496
Total,	0.0630	0.0859	$0.2371	$0.3235

The number of tons of rock hoisted was:

	July.	August.
Total rock hoisted,	7006 tons.	7273 tons.
Rock sent to stamps,	5062 "	5330 "
Poor rock sent to burrows,	1944 "	1943 "
Per cent. stamped,	72.25	73.28

The total number of tons hoisted from July 1st, 1875, to July 1st, 1876, was 82,410. The number of tons of rock milled was 51,135, or 62.5 per cent. of the rock hoisted.

The front wheels of the skip as it arrives at the top of the tramway of the shaft, fall between the rails, and the contents are dumped on to a grating made of rails. The fine ore, of which there is very little in the conglomerate mines, falls through, while the large pieces slide into the rock-house. Here all the large pieces are broken with sledges, and the poor carried to the burrows, while those sufficiently rich to be treated are carried to the rock-house. The breaking up of the large pieces of conglomerate is a laborious operation when done by hand. To avoid this the rock is sometimes broken by a steam-hammer, as at the Calumet & Hecla. Some mines have a shaft-house for each shaft, which is a bad plan. Others have one for all the shafts; others, still, do no sorting in the shaft-house, but carry all the ore to the rock-house. The rock-house is usually several hundred feet away from the shaft-house, and is connected with it by a trestle-way, and is often at a lower level than the shaft-house. The car carrying the ore is moved automatically by a wire cable; when it arrives at the rock-house it dumps itself, in the same way as the mine-skip, over a grating, and returns to the shaft-house. The ore fine enough to be stamped is discharged at once into pockets. The large pieces are brought to a large-size Blake's crusher, which, at the Atlantic Mill,

is sixteen inches by twenty-four inches; the medium ore goes to one fifteen inches by nine inches. The large crusher discharges immediately into the one of smaller size. At the Atlantic Mill, one large and two small crushers break from three hundred and twenty to three hundred and fifty tons of ore per day. On conglomerate rock they would break about half as much. No attempt is made to screen the ore as it comes from the crushers. It is all discharged into bins to go to the stamps. It should be screened, and the material fine enough to pass the stamp-screens separated, so as to allow the stamp to work only on ore needing crushing, for it has been found by experiment in California, and also on Lake Superior, with the Ball stamps, that it takes just as long to discharge the mortar filled with crushed rock as it does to crush the rock and discharge it.

THE NUMBER OF MEN AND TOTAL COST OF ASSORTING AND SELECTING AT THE ALLOUEZ MINE WAS, IN

	JULY, 1876.		AUGUST, 1876.	
	No. of Men.	Cost.	No. of Men.	Cost.
Machinist,	⅜	$24 99	⅜	$26 25
Blacksmith,	⅞	36 38	1⅛	50 19
Fireman,	1	41 34	1	42 57
Foreman,	3	195 00	3	195 00
Laborers,	39¼	1365 69	42½	1457 48
Total,	44½	$1663 40	48	$1771 49

The average monthly force during 1875 was 48 men.

The expenses of sorting and selecting the ore for July and August, 1876, are given in the tables below:

ASSORTING AND SELECTING EXPENSES AT THE ALLOUEZ MINE, JULY, 1876.

	NUMBER OF DAYS' WORK PER TON ROCK.		COST PER TON OF ROCK.	
	Hoisted.	Milled.	Hoisted.	Milled.
Machinist,	0.0014	0.0019	$0.0036	$0.0051
Blacksmith,	0.0034	0.0047	0.0052	0.0072
Laborers Selecting Rock,	0.1512	0.2093	0.1949	0.2698
Fireman,	0.0039	0.0054	0.0059	0.0080
Foreman,	0.0116	0.0160	0.0278	0.0385
Supplies Used,			0.0537	0.0743
Total,	0.1715	0.2373	$0.2911	$0.4029

AUGUST, 1876.

	NUMBER OF DAYS' WORK PER TON ROCK.		COST PER TON OF ROCK.	
	Hoisted.	Milled.	Hoisted.	Milled.
Machinist,	0.0014	0.0019	$0.0036	$0.0049
Blacksmith,	0.0042	0.0057	0.0069	0.0094
Laborers Selecting Rock,	0.1576	0.2151	0.2004	0.2735
Fireman,	0.0037	0.0050	0.0059	0.0081
Foreman,	0.0111	0.0151	0.0268	0.0366
Supplies Used,			0.0515	0.0703
Total,	0.1780	0.2428	$0.2951	$0.4027

The percentage of ore sent to the mills is very variable, depending on the richness of the mine. In 1876, the Quincy stamped 75 per cent. of the rock hoisted, and the Allouez 62.5 per cent.*

By dressing, the mineral is divided into five classes which vary somewhat from mine to mine. No. 1 is barrel-stuff, the other grades come from the washers. The value of these grades is expressed in assay and ingot.

The Atlantic has very little barrel-stuff, and No. 1 from that mine is from the washers.

	Allouez, assay.	Allouez, ingot.	Atlantic, assay.
No. 1,	96 per cent.	90 per cent.	98 per cent.
No. 2,	94 "	80 "	88 "
No. 3,	79 "	60 "	70 "
No. 4,	87 "	80 "	85 "
No. 5,	40 "	25 "	30 "

The impurity in Nos. 4 and 5 is mostly iron.

Very little of Nos. 4 and 5 is produced. No. 4 is slimes collected from the washing, and No. 5 slimes from the tail-house; they are very impure, containing mostly iron. All of these grades are smelted together. The mineral is not dried, but packed wet in barrels, and goes to the smelting works with the water in it, which is weighed and charged for as copper. The percentage of copper in the rock at the Atlantic in 1876 was 1.3; at the Allouez, 1.4. The average yield of the rock in ingot at the Atlantic was .99 per cent., and at the Allouez .87 per cent. The average yield of the mineral in 1877 was, at the Atlantic, 71.32 per cent.; at the Phœnix, 73.34, per cent., and at the Ridge, 77 per cent. The cost of stamping per ton, in 1877, was $0.578 at the Atlantic, and $0.83 at the Central. In 1875, at the Central, it was $0.87.

The yield of the ore is determined by assay and the returns of

* See p. 298.

ingot copper from the smelting works, and is expressed by so much "mineral," or dressed ore sent to the smelting works, and so much "ingot," or copper, returned from the smelting works. With the exception of the Calumet & Hecla no attempt is made to determine the value of the ore by assay at the mine, but complete confidence is placed in the assays made at the smelting works. For a short time assayers were employed at both the Osceola and the Allouez mines, but the laboratories were abandoned after a very incomplete trial. Every mine, or at least two mines together, should have an assayer, not so much to control the smelting works, whose returns are rarely ever disputed, as to control their own dressing works, and to ascertain in what direction to look for economies and improvements. The only assay now made is the Cornish shovel-assay, which, at the best, gives but the most rudely approximate results, and can only be said to be better than nothing. The method of taking the assay-sample on the shovel allows the greater part of the fine ore to escape. It may be said that it is not possible to save this fine ore, which, by the present method, is very true; but if the exact quantity lost was known, there would be great stimulus to efforts to save it, and it would, at least, lead to improved methods or attempts to improve them. Experiments in this direction can be made at a very small expense.

The mills must be placed where water can be had in abundance. This has led to two methods: one is to place the mill on the lake and pump the water, as is done in the Calumet & Hecla, Osceola, Quincy, Franklin, and Pewabic mines; the other is to place the mill in a favorable position and bring the water to it in launders, which, in the Atlantic and Allouez mines, are two and one-half miles long. Sometimes, as in the case of the Quincy, the Franklin, and the Pewabic mines, the mines and mills are together; at others, they are at considerable distances apart, and are connected by a mine railroad, which, in the case of the Calumet & Hecla, is eight and one-half miles; the Osceola, eight; the Atlantic, three, and the Allouez, two and one-half miles long.

The cost of transportation over these roads, and of keeping them in repair, is a considerable item. The details of the Allouez Mine for July, 1876, are given below:

Railroad Expenses.

18 Engineers,	$60.00
11 Firemen,	45.00
18 Brakemen,	45.00

The following table gives the cost of the mine railroad per ton of rock hoisted and stamped at the Allouez Mine, for July and August, 1876:

MINE RAILROAD EXPENSES AT THE ALLOUEZ MINE, JULY, 1876.

	NUMBER OF DAYS' WORK PER TON ROCK,		COST PER TON OF ROCK.	
	Hoisted.	Milled.	Hoisted.	Milled.
Engineer,	0.0039	0.0054	$0.0089	$0.0123
Brakeman,	0.0039	0.0054	0.0059	0.0082
Fireman,	0.0039	0.0054	0.0070	0.0097
Trackman,	0.0207	0.0287	0.0262	0.0363
Supplies Used,			0.0213	0.0295
Total,	0.0324	0.0449	$0.0693	$0.0960

AUGUST, 1876.

	NUMBER OF DAYS' WORK PER TON ROCK.		COST PER TON OF ROCK.	
	Hoisted.	Milled.	Hoisted.	Milled.
Engineer,	0.0042	0.0057	$0.0092	$0.0126
Brakeman,	0.0037	0.0050	0.0061	0.0083
Fireman,	0.0042	0.0057	0.0069	0.0094
Trackman,	0.0037	0.0050	0.0051	0.0070
Supplies Used,			0.0219	0.0299
Total,	0.0158	0.0214	$0.0492	$0.0671

The cost of breaking and tramming at the Central, where the mine and mill are close together, was, in 1875, $0.15 per ton, and in 1877, was $0.14. The following tables give the expenses of the stamp-mill of the Allouez Mine for July and August, 1876.*

* See also the Metallurgical Review, vol. ii, p. 298.

ALLOUEZ STAMP MILL EXPENSES FOR SUPPLIES.

		July, 1876. Quantities Used per Ton.		July, 1876. Cost per Ton Rock.		August, 1876. Quantities Used per Ton.		August, 1876. Cost per Ton Rock.	
		Hoisted.	Milled.	Hoisted.	Milled.	Hoisted.	Milled.	Hoisted.	Milled.
Wood	at $2.50 per cord,	0.1113	0.1540	$0.2783	$0.3852	0.0979	0.1336	$0.2447	$0.3339
Lard Oil	" 1.25 " gall.					0.0029	0.0040	0.0036	0.0049
Lubricating Oil	" .35 " "					0.0033	0.0045	0.0012	0.0016
Cylinder Oil	" 1.00 " "	0.0137	0.0190	0.0187	0.0190	0.0066	0.0090	0.0066	0.0090
Kerosene Oil	" .25 " "	0.0070	0.0097	0.0017	0.0024	0.0066	0 0090	0.0016	0.0022
Old Dominion Oil	" .65 " "					0 0133	0.0181	0.0086	0.0117
White Lead	" .12 " lb.	0.0014	0.0019	0.0002	0.0003				
Rubber Packing	" .40 " "	0.0028	0.0039	0.0011	0.0015	0.0005	0.0007	0.0002	0.0003
Iron	" .08 " "	0.0286	0.0396	0.0009	0.0012	0.0275	0.0375	0.0008	0.0011
Steel	" .20 " "	0.0014	0.0019	0.0003	0.0004	0.0014	0.0019	0 0003	0.0004
Nails	" 3¾ and 5c "	0 0071	0.0098	0.0003	0.0005	0.0137	0 0187	0.0005	0.0007
Cotton Waste	" .15 per "	0.0042	0.0057	0.0006	0.0008	0.0066	0.0090	0.0010	0.0014
Copper Rivets	" .75 " "	0.0001	0.0001	0.0001	0.0001				
Babbitt Metal	" .40 " "	0.0042	0.0057	0.0017	0.0023	0.0027	0.0037	0.0011	0.0015
Copper Tacks	" .75 " "	0.0001	0.0001	0.0001	0.0001				
Spring Wire	" .50 " "	0.0014	0.0019	0.0007	0 0009	0.0007	0.0010	0.0003	0.0004
Lumber	" 12.00 " M feet	0.0713	0.0987	0.0009	0.0012	0.0687	0.0957	0.0008	0.0011
Wire Cloth				0.0014	0 0019			0.0014	0 0019
Belting				0.0021	0.0029			0.0021	0.0029
Grate Bars (Steel)								0.0007	0.0009
Shovels	" 1.25 each.	0.0008	0.0011	0.0011	0.0015	0.0016	0.0022	0.0021	0.0029
Lace Leather	" 2.50	0.0001	0.0001	0.0004	0.0006	0.0001	0.0001	0.0003	0.0004
Files and Sandpaper				0.0005	0.0008				
Oil Cans	" .30					0.0003	0.0004	0.0001	0.0001
Lamps, Chimneys, and Wicks				0.0003	0.0004			0.0003	0.0004
Water and Sand Pails	" .25	0.0003	0.0004	0.0001	0.0001			0.0001	0.0001
Foundry Bills				0.0534	0.0739			0 0358	0.0488
Lime and Brick								0.0008	0.0011
Brooms	" .25	0.0010	0.0014	0.0002	0.0003	0.0008	0.0011	0.0002	0.0003
Sundries (Blacksmiths' and Carpenters' Supplies)				0.0021	0.0029			0.0039	0.0054
Total				$0.3624	$0.5016			$0.3191	$0.4354

ALLOUEZ MINE.

OPERATION OF MILL PER TON ORE MILLED. | RESULTS.

1875.	Cords Wood Used.	Cost Wood.	Cost Supplies.	Cost Foundry Bills	Wages.	Total Running Expense.	Tons Rock Crushed.	Tons Stamped per Cord Wood.	Pounds Copper Produced.	Per ct. Copper.	No. of Men Empl'd.
July.....	0.2267	$0.5669	$0.1313	$0.2869	$0.7582	$1.7435	2,205	4.40	804.30	1.8	40
August.....	0.2088	0.5219	0.2018	0.0522	0.4635	1.2393	4,096	4.79	1,709.70	2.09	44
September.....	0.1684	0.4210	0.0740	0.1226	0.4342	1.0518	4,656	5.90	1,800.50	1.9	49
October.....	0.1775	0.4438	0.0678	0.1881	0.5306	1.1804	4,450	5.63	1,700.55	1.9	48
November.....	0.1736	0.4340	0.0864	0.1614	0.4838	1.1656	3,600	5.76	1,296.80	1.7	38
December.....	0.1467	0.3637	0.0954	0.0852	0.4533	0.9976	4,976	6.91	2,003.50	2.	45
1876.											
January.....	0.1967	0.4917	0.0863	0.0915	0.5215	1.1910	4,200	5.08	1,600.54	1.9	48
February.....	0.2480	0.6200	0.0955	0.2649	0.9258	1.9062	2,500	4.03	904.40	1.8	47
March.....	0.1725	0.4312	0.0283	0.0661	0.4332	0.9588	4,812	5.80	1,604.60	1.6	46
April.....	0.1422	0.3555	0.0293	0.0540	0.3161	0.7549	5,295	7.	1,723.23	1.6	40
May.....	0.1655	0.4138	0.0501	0.0750	0.3539	0.8928	5,015	6.	1,801.30	1.8	44
June.....	0.1426	0.3565	0.0529	0.0818	0.3265	0.8177	5,330	7.	1,804.55	1.7	43
Total.....	0.1742	$0.4350	$0.0777	$0.1075	$0.4641	$1.0843	51,135	5.74	18,753.97	1.83	532

ALLOUEZ STAMP MILL EXPENSE—LABOR AND SUPPLIES.

JULY, 1876.

	NUMBER OF DAYS' WORK PER TON ROCK.		COST PER TON OF ROCK.	
	Hoisted.	Milled.	Hoisted.	Milled.
Machinist,	0.0096	0.0133	$0.0242	$0.0335
Engineers,	0.0087	0.0120	0.0156	0.0217
Firemen,	0.0164	0.0227	0.0273	0.0379
Head Runners,	0.0082	0.0113	0.0101	0.0140
Stamp Feeders,	0.0265	0.0367	0.0383	0.0530
Dressers,	0.0655	0.0906	0.0783	0.1082
Cooper and Blacksmith,	0.0038	0.0053	0.0091	0.0125
Watchman,	0.0043	0.0060	0.0073	0.0101
Carpenters,	0.0053	0.0073	0.0088	0.0122
Supplies Used,			0.3624	0.5016
Total,	0.1483	0.2052	$0.5814	$0.8047

AUGUST, 1876.

	NUMBER OF DAYS' WORK PER TON ROCK.		COST PER TON OF ROCK.	
	Hoisted.	Milled.	Hoisted.	Milled.
Machinist,	0.0093	0.0127	$0.0237	$0.0323
Engineers,	0.0084	0.0114	0.0161	0.0220
Firemen,	0.0165	0.0225	0.0278	0.0379
Head Runners,	0.0084	0.0114	0.0107	0.0146
Stamp Feeders,	0.0269	0.0367	0.0386	0.0527
Dressers,	0.0697	0.0951	0.0804	0.1097
Cooper and Blacksmith,	0.0042	0.0057	0.0089	0.0121
Watchman,	0.0042	0.0057	0.0068	0.0093
Carpenters,				
Supplies Used,			0.3192	0.4354
Total,	0.1476	0.2012	$0.5322	$0.7262

ALLOUEZ MINE.

	July, 1876.	August, 1876.
Tons of rock stamped per cord of wood,	6.47	7.47
Cost of stamping ton of rock,	$0.8047	$0.726
Average yield of rock stamped in ingot,	1.819 per cent.	1.685 per cent.
Average yield of rock hoisted in ingot,	1.31 "	1.24 "
Number of tons of rock hoisted,	7006	7237
Number of tons of rock stamped,	5062	5330

Average cost of milling one ton of rock, from July 1st, 1875, to July 1st, 1876, $1.0843.

Average cost of mining one ton of rock, delivered in rock-house, during same period, $2.744.

Average cost of one ton of rock, including smelting, $6.613.

The stamps at the Central Mine are of the Cornish patterns. The table below gives some details regarding them:

	1875.	1877.
Number of days run,	91	108
Number of stamp-heads run,	32	29
Number of tons of rock stamped per head in twenty-four hours,	5 87	5.45
Yield of the rock in mineral,	3.78 per cent.	4.21 per cent.
Yield of the mineral in copper,	70.08 "	71.39 "
Number of tons stamped per cord of wood,	10.27	10.45
Cost per ton of rock stamped,	$0.87	$0.83

The three following tables relate to the expenses of the Atlantic Mine:

ATLANTIC MINE.

	1875.	1876.	1877.
Number of tons of mineral per month,	105	111	120
Percentage yield of the mineral,		68.85	71.32
Yield of the mineral per ton of rock,	27 lbs.	27.56 lbs.	27.3 lbs.
Number of lbs. of ingot copper,	1,565,000	1,835,041	2,054,304
Number of cu. fathoms worked per man,	17.8*	19.67	20.14
Cost per fathom,	$55.48†	$52.47	$45.62
Number of men and officers,	316	333	352

EXPENSE PER CUBIC FATHOM OF GROUND MINED AT THE ATLANTIC MINE.

	1874.	1875.	1876.	1877.
Total running expenses and marketing,	$62.62	$61.61	$53.10	$47.46
Construction expenses,		6.13	.83	1.84
Net expenses of mining and marketing,	$62.62	$55.48	$52.27	$45.62

Ratio of running expenses and cost of smelting and marketing, per ton of rock stamped, at the Atlantic Mine:

	1874.	1875.	1876.	1877.
Smelting and marketing,	$0.59	$0.56	$0.56	$0.49
Stamping,	1.00	.88	.67	.58
Mine railroad,	.16	.15	.12	.117
Mining, breaking, hauling, and officers,	2.34	2.31	2.19	1.883
Total,	$4.09	$3.90	$3.54	$3.07

* In 1874, 15.7.

† In 1874, $62.62.

It is interesting to notice the continual decrease in the cost at this mine. The value of a ton of the rock for 1874 and 1875 was $4.39. The mine is working two shafts, each of which has its own rock-house. The copper from a ton of rock, barrelled and ready for delivery, costs 88 cents. This includes the cost of mining and all outside expenses of every kind. The following tables give the surface expenses, the construction account, the miscellaneous expenses, the cost of mining, milling, and the cost of transporting to the smelting works, and smelting at the Allouez Mine, for July and August, 1876:

SURFACE EXPENSES AT THE ALLOUEZ MINE.

JULY, 1876.

	NUMBER OF DAYS' WORK PER TON ROCK.		COST PER TON OF ROCK.	
	Hoisted.	Milled.	Hoisted.	Milled.
Surface Captain,	0.0038	0.0053	$0.0143	$0.0198
Teamsters and Laborers,	0.0698	0.0966	0.1091	0.1510
Blacksmith,	0.0019	0.0026	0.0043	0.0059
Watchman,	0.0048	0.0066	0.0068	0.0094
Carpenter,	0.0058	0.0080	0.0090	0.0125
Mason,				
Supplies Used,			0.0368	0.0509
Total,	0.0861	0.1191	$0.1803	$0.2495

AUGUST, 1876.

	NUMBER OF DAYS' WORK PER TON ROCK.		COST PER TON OF ROCK.	
	Hoisted.	Milled.	Hoisted.	Milled.
Surface Captain,	0.0037	0.0050	$0.0137	$0.0187
Teamsters and Laborers,	0.0678	0.0925	0.1011	0.1380
Blacksmith,	0.0019	0.0026	0.0049	0.0067
Watchman,	0.0046	0.0063	0.0066	0.0090
Carpenter,	0.0037	0.0050	0.0050	0.0068
Mason,	0.0037	0.0050	0.0090	0.0123
Supplies Used,			0.0592	0.0808
Total,	0.0824	0.1164	$0.1996	$0.2723

CONSTRUCTION ACCOUNT AT THE ALLOUEZ MINE.

JULY, 1876.

	NUMBER OF DAYS' WORK PER TON ROCK.		COST PER TON OF ROCK.	
	Hoisted.	Milled.	Hoisted.	Milled.
Carpenters and Masons on new house,	0.0154	0.0213	$0.2459	$0.3403
Laborers at addition to stamp mill,				
Carpenters,				
Lumber and Supplies for construction of clerks' house,				
Total,	0.0154	0.0213	$0.2459	$0.3403

AUGUST, 1876.

	Number of Days' Work per ton Rock.		Cost per ton of Rock.	
	Hoisted.	Milled.	Hoisted.	Milled.
Carpenters and Masons on new house,				
Laborers at addition to stamp mill,	0.0148	0.0202	$0.0195	$0.0266
Carpenters,	0.0260	0.0355	0.0510	0.0696
Lumber and Supplies for construction of clerks' house,			0.0768	0.1048
Total,	0.0408	0.0557	$0.1473	$0.2010

MISCELLANEOUS EXPENSES AT THE ALLOUEZ MINE.

JULY, 1876.

	Number of Days' Work per ton Rock.		Cost per ton of Rock.	
	Hoisted.	Milled.	Hoisted.	Milled.
Agents and Clerks,	0.0116	0.0161	$0.0761	$0.1054
Insurance (monthly),			0.0214	0.0296
Discount,			0.0040	0.0055
Taxes (monthly),			0.0571	0.0790
Assay,			0.0027	0.0038
Expense in suit,			0.0102	0.0141
Travelling expenses,				
Supplies used,			0.0092	0.0127
			$0.1807	$0.2501
Commission subtracted,			0.0121	0.0167
Total,	0.0116	0.0161	$0.1686	$0.2333

AUGUST, 1876.

	Number of Days' Work per ton Rock.		Cost per ton of Rock.	
	Hoisted.	Milled.	Hoisted.	Milled.
Agents and Clerks,	0.0111	0.0151	$0.0733	$0.1000
Insurance (monthly),			0.0206	0.0281
Discount,			0.0039	0.0053
Taxes (monthly),			0.0550	0.0750
Assay,				
Expense in suit,			0.0245	0.0334
Travelling expenses,			0.0034	0.0046
Supplies used,				
			$0.1807	$0.2466
Commission subtracted,			0.0116	0.0158
Total,	0.0111	0.0151	$0.1691	$0.2307

TOTAL COST OF MINING AND MILLING AT THE ALLOUEZ MINE.

	JULY, 1876.		AUGUST, 1876.	
	COST PER TON OF ROCK.		COST PER TON OF ROCK.	
	Hoisted.	Milled.	Hoisted.	Milled.
Total Mining Cost,	$2.0395	$2.8227	$2.0571	$2.8070
Hoisting Expense,	0.2098	0.2904	0.2371	0.3235
Assorting and Selecting,	0.2911	0.4029	0.2951	0.4027
Surface Expenses,	0.1803	0.2495	0.1996	0.2723
Railroad Expense,	0.0693	0.0960	0.0492	0.0671
Mineral and Copper Expense,	0.0268	0.0371	0.0285	0.0389
Miscellaneous Expenses,	0.1686	0.2333	0.1691	0.2307
Stamp Mill Expenses,	0.5814	0.8047	0.5322	0.7262
Construction Account,	0.2459	0.3403	0.1473	0.2010
Total Expenditures,	$3.8128	$5.2770	$3.7152	$5.0696
Received for Teaming Wood, Rents and Sundries,	0.1013	0.1402	0.1141	0.1557
Total,	$3.7115	$5.1368	$3.6011	$4.9139

MINERAL AND COPPER EXPENSE AT THE ALLOUEZ MINE.

	JULY, 1876.		AUGUST, 1876.	
	COST PER TON OF ROCK.		COST PER TON OF ROCK.	
	Hoisted.	Milled.	Hoisted.	Milled.
Mineral Range R. R. Co., for Transportation of Mineral,	$0.0230	$0.0318	$0.0240	$0.0327
Detroit and Lake Superior Copper Co.—"Coopering,"	0.0038	0.0053	0.0045	0.0061
Total,	$0.0268	$0.0371	$0.0285	$0.0389

The whole number of men in the employ of the Allouez company was in July, 1876, 396, and in August, 417. The following table, giving the details of the Quincy Mine for eight years, is taken from the *Hancock Journal*, of March, 1878.

QUINCY MINING COMPANY'S OPERATIONS FOR EIGHT YEARS.

	1870.	1871.	1872.	1873.	1874.	1875.	1876.	1877.
Product of Stamp Copper	1437 tons.	1370 tons.	1302 tons.	1644½ tons.	1752¾ tons.	1717⅝ tons.	1765½ tons.	1586½ tons.
Product of Mass Copper	86 "	96 "	100 "	67½ "	58 "	46 "	65¼ "	65¾ "
Total Product of Mineral	1523 "	1466 "	1402 "	1712 "	1810¾ "	1763⅝ "	1830¾ "	1652¼ "
Product of Ingot Copper	1287 "	1169 "	1137 "	1402 "	1523⅓ "	1446¼ "	1474¾ "	1360⅛ "
Percentage of Mineral	84.48	79.76	81.12	81.90	84.12½	82.	80.53	82.23
Gross Earnings	$538,170	$549,730	$725,097	$722,409	$656,083	$653,168.08	$581,226.66	$515,584
Total Expenses	$382,710	$355,513	$522,107 *b*	$519,903 *b*	$461,089	$456,816.66	$461,032.48	$421,874
Per cent. of Expenses to Earnings	71.11	66.49	71.99 *b*	71.97 *b*	70.39	69.93	79.32	81.05
Net Profit	$157,630 *a*	$194,377 *a*	$213,544 *a*	$208,469 *a*	$174,472 *a*, *c*.	$216,964 *d*	$120,194.18	$93,710.01
Dividends Paid	$80,000	$260,000	$250,000	$160,000	$160,000	$160,000	$140,000	$80,000
Surplus Undivided	$263,533	$297,742	$265,103	$313,572	$328,044	$385,009	$581,299.11	$364,685.85
Total Mining Cost of Ingot Copper, per lb	12.43 cts.	13.22 cts.	20.26 cts. *b*	16.28 cts. *b*	12.84 cts.	13.37 cts.	13.33 cts.	12.31 cts.
Smelting, Marketing, and other Expenses, per lb.,	2.47 "	2.38 "	2.67 "	2.29 "	2.29 "	2.42 "	2.39 "	2.80 "
Average Cost per lb., Marketed	14.90 "	16.60 "	22.93 " *b*	18.57 "	15 13 "	15.79 "	15.72 "	15.11 "
Average Sales of Ingot Copper, per lb	.21 "	23.50 "	32⅓ "	26.50 "	21.88 "	22.67 "	20. "	18.56 "
Tons of Rock Stamped	55.027	59.757	60.828	63.272	67.112	70.501	74.717	75.307
Average per cent. of Mineral in Stamp Rock	2.61	2.59	2.14	2.60	2.61	2.44	2.38	2.11
Stamp Mill in Operation	283 days.	292½ days.	283 days.	293 days.	292½ days.	278 days.	280 days.	266 days.
Cost per Ton, Stamping and Washing	$2.15	$1.01	$1.06½	$1.21	$1.08½	96½ cts.	91 cts.	94.90 cts.
Number of Fathoms Stoped on Contract	4,275	4,692	5,165	4,946	4,353	4,968	4,796	4,729 *e*
Yield of Mineral per fathom	624 lbs.	551 lbs.	482 lbs.	600 lbs.	685 lbs.	591 lbs.	629 lbs.	568 lbs.
Yield of Ingot Copper, per fathom	528 "	441 "	391 "	491 "	577 "	485 "	507 "	467 "
Average Force Employed	422 men.	440 men.	437 men.	489 men.	468 men.	504 men.	510 men.	474 men.
Average Number of Miners	181 "	194 "	233 "	223 "	234 "	271 "	271 "	249 "
Average Wages of Mines on Contract, per month,	$46.09	$47.08	$60.62	$62.92	$48.38	$46.74	$47.13	$43.79

(*a*) Including interest on loans, $2,169.26 in 1870, $10,160.56 in 1871; $10,422.67 in 1872; $2,725.32 in 1873; $4,432.20 in 1874.

(*b*) $67,227.65, "extraordinary expenses" in 1872, and $35,492.46 in 1873.

(*c*) $28,820 for copper sold to a firm which became bankrupt, is deducted.

(*d*) This includes $4323, being 15 per cent. received from a bankrupt firm in settlement for $28,820 of copper sold in 1874, and charged off in the accounts of that year.

(*e*) 29.50 cents of this was for repairs on mill.

The dressing of these ores has been fully treated in the second volume of the *Metallurgical Review.*

The great bane of mining in Lake Superior is surface improvements. Many of the mines owe their want of prosperity or even their failure to this cause alone. Money which should have been put into the mine has been spent on the surface. The stockholders consequently often find themselves in serious difficulty, and sometimes with no workable mine and no capital. In most cases, if the surface improvements had been temporarily dispensed with, and the money spent in the mine, it would in time have paid for what was done at the surface. Lake Superior is not the only mining country where this has happened, but much of the failure charged to other causes is due to this alone. When, however, it is taken into consideration, that this country was settled as the result of wild speculation, that mines were opened without sufficient exploration, and then abandoned without any real development, and, in some instances, before it could be known whether there was value in the property or not, it is scarcely to be wondered at that capital did, for a time, shun Lake Superior altogether. Some of the best examples, however, both of mining and milling, as well as of management, can be found in the copper regions of Lake Superior. Very striking examples of the extremes, both of success and of failure, make marked contrasts with each other in different parts of the Lake. The half-ruined town of Rockland and the very quiet city of Ontonagon would hardly lead one to suspect their former activity and wealth, while the villages of Calumet and Red Jacket are notable examples of prosperity and of the enlightened and liberal policy of the directors of the Calumet & Hecla mines. There is nothing which foresight and an enlightened philanthropy could suggest but has been here carried into effect for the benefit of the mining population.

On the whole, Lake Superior cannot be said to be a prosperous mining country. Capital, which was tending towards it, was paralyzed by the panic of 1873, and some rude examples of want of capacity, or want of honesty, together with the fall in the price of copper from $0.26 in October, 1873, to $0.17¾, October, 1877,* have not tended to attract it there. The difficulty of the region does not lie in the want of copper, for there is an abundance of it, nor in mining, for, in general, it is skilfully done, but in the dressing. The following assays of tailings from the washers, yielding the different grades

* The price, while this article is passing through the press, is $0.15½ to $0.15¾.

of copper, I made in the winter of 1875–6. The samples were taken from a mill whose ore yielded less than two per cent.

	Yield in copper.
Tails from Nos. 2 and 3, copper, ...	1.325 per cent.
" Nos. 2, 3, and 4, copper, . . .	1.210 "
" Nos. 3 and 4, "	1.030 "
" No. 5, copper, ...	1.360 "

Much of this copper is attached to small pieces of rock and is carried off with it. This has led to restamping the tails, as is done in the Calumet & Hecla; this produces other rich tails, and a large loss in float copper. If the price of copper should ever rise, or even if at the present time any one could or would take the time and make the experiments to solve this problem, he would be a benefactor to the country. Every one now is working in the same way; the type of one mill is the type of them all; they differ only in the intelligence of their management. A new element will have to be introduced before the losses decrease, and should the price of copper fall lower, or even remain as it is, the outlook for the country is gloomy.

In conclusion, I beg to express my thanks to the officers of the Allouez Mine, who have allowed me to publish a large amount of information gained in an official examination of that mine; to Captain Parnell, of the Phœnix, for great courtesy in giving information, both at the mine, and since by letter; and to Captain Robert, of the Atlantic Mine, for a rough sketch of the mine skip.

THE MECHANICAL WORK PERFORMED IN HEATING THE BLAST.

BY PROF. B. W. FRAZIER, LEHIGH UNIVERSITY, BETHLEHEM, PA.

(Read at the Wilkes-Barre Meeting, May, 1877.)

THIS interesting application of the laws of thermodynamics to metallurgical practice has not been discussed by any writer, within my reading, except the late Prof. Callon of Paris. In his Cours de Machines,* Prof. Callon has given a short but lucid discussion of this subject in the admirably clear style for which he was remarkable. Although the interest attached to the subject is rather theoretical than practical, I have thought that an attempt to explain the mechanical action exerted in the hot-blast oven might not be entirely devoid of utility, especially in the suggestions which it involves.

The statement, that the mechanical work performed in heating the blast is, when high temperatures are produced, considerably greater than the work performed by the blowing-engine, may seem incredible to many who are practically acquainted with the subject, appearing, as it does, to conflict with the results of their experience.

It is, nevertheless, literally true, and I shall attempt in this paper to prove it, and to explain why it has not rendered itself palpably manifest in practice.

Before proceeding to the mathematical demonstration, it will be well to recall to mind the definitions of some terms employed by writers in mechanics and thermodynamics.

The *actual energy* of a moving body, as defined by Rankine, is the work which it is capable of performing against a retarding resistance before being brought to rest, and is equal to the energy which must be exerted on the body to bring it from a state of rest to its actual velocity. The value of that quantity is the product of the weight of the body into the height from which it must fall to acquire its actual velocity.

---

* Vol. I, chap. x, § 4, p. 312.

It is expressed algebraically by the following equation:

$$E = Q \frac{u^2}{2g},$$

in which

E = the actual energy of the body,
Q = its weight,
u = its velocity,
g = the acceleration of gravity.

The *intrinsic energy* of a fluid, according to the same author, is the energy which it is capable of exerting against a piston, in changing from a given state as to temperature and volume to a state of total privation of heat and indefinite expansion. In the case of atmospheric air, which may be considered a perfect gas, the algebraic expression for this quantity is

$$I = \frac{p_o v_o}{\gamma - 1} \frac{T}{T_o}.$$

In this expression,

I = the intrinsic energy of the air.
p_o = the normal pressure of the atmosphere.
v_o = the volume of a given weight of air, when its pressure and temperature are p_o and T_o respectively.
T_o = the absolute temperature of melting ice.
In the Centigrade scale $T_o = 273°$.
In the Fahrenheit scale $T_o = 493.2°$.
T = the absolute temperature of the air. The value of this may be obtained from t, the temperature as recorded by the thermometer, by adding to it the absolute temperature of the zero of the scale.
In the Centigrade scale the absolute temperature of the zero of the scale is the same as that of melting ice, *i. e.*, 273°.

$$T = 273° + t.$$

In the Fahrenheit scale, the temperature of the zero of the scale is 32° less than that of melting ice.

$$T = 461° + t.$$

γ = the ratio between the specific heat of air at constant pressure and that at constant volume. The numerical value of γ is 1.408.

The relations between the volume, pressure, and absolute temperature of air are expressed by the following equations:

$$\frac{p_o v_o}{T_o} = \frac{p_1 v_1}{T_1} = \frac{p_2 v_2}{T_2} \text{ etc.}$$

In case the change in the conditions of the air be made without accession or loss of heat, the following equations permit the determination of the variation in any one of these quantities, when we know the corresponding variation in either of the others:

$$\frac{p_1}{p_o} = \left(\frac{v_o}{v_1}\right)^{\gamma} = \left(\frac{T_1}{T_o}\right)^{\frac{\gamma}{\gamma-1}},$$

$$\frac{v_1}{v_o} = \left(\frac{p_o}{p_1}\right)^{\frac{1}{\gamma}} = \left(\frac{T_o}{T_1}\right)^{\frac{1}{\gamma-1}},$$

$$\frac{T_1}{T_o} = \left(\frac{v_o}{v_1}\right)^{\gamma-1} = \left(\frac{p_1}{p_o}\right)^{\frac{\gamma-1}{\gamma}}$$

If, during the change in the conditions of the air one of these quantities remains constant, the following equations express the relations existing between the others:

$$\text{If } p_1 = p_o, \quad \frac{T_1}{T_o} = \frac{v_1}{v_o},$$

$$\text{If } v_1 = v_o, \quad \frac{T_1}{T_o} = \frac{p_1}{p_o},$$

$$\text{If } T_1 = T_o, \quad \frac{p_1}{p_o} = \frac{v_o}{v_1}.$$

In order to simplify the discussion, I shall make the following assumptions:

1st. The absolute temperature of the air drawn into the blowing cylinder is T_o, and its pressure is p_o.

2d. The blast loses no heat during its compression and its passage from the blowing cylinder to the hot-blast oven.

3d. The back pressure before the tuyeres is equal to the atmospheric pressure, p_o; that is, we will neglect the excess of pressure over that of the external atmosphere which always exists in the hearth of a blast furnace while the blast is on.

4th. We will neglect all losses of pressure due to the friction of the air in the pipes, also to bends, sudden changes of section and leaks in the pipes, as well as the loss of pressure corresponding to the amount which is absorbed in producing the velocity of flow of the air through the pipes.

5th. In issuing from the nozzles of the blast pipes, the air is supposed to be first cooled to the full extent by its expansion before its temperature is again raised by the heat developed and stored in the hearth of the furnace.

The assumptions thus made would involve serious inaccuracies, if the object of the calculations were the exact determination of the quantity of blast entering a given furnace, but they do not appreciably affect the general results which it is the object of this discussion to obtain.

The whole system of blowing, heating, and conducting apparatus for the blast, from the piston of the blowing cylinder to the nozzles of the blast pipes, may be considered as a long conduit or pipe of varying section, at one end of which the air is compressed and propelled forwards, while it issues at the other, overcoming the resistance of the back pressure in the furnace, and carrying with it a certain amount of actual energy. Let us examine the successive changes to which it is subjected in its passage. We take air, possessing no actual energy, but with an intrinsic energy, (I_o), corresponding to its temperature (T_o). A certain amount of work, of compression (W_c), is performed upon it. This work is entirely converted into heat, and is absorbed by the air in the form of intrinsic energy, which is thus increased to I_1, its temperature being correspondingly raised to T_1. The air is then propelled forwards, a certain amount of work of propulsion, (W_p), being performed upon it. It then passes to the hot-blast oven, where its temperature is increased to T_2, its intrinsic energy being correspondingly increased to I_2, and its volume to v_2; its pressure, however, remaining unaltered, *i. e.* p_1. By its dilatation from v_1 to v_2 at constant pressure, a certain amount of work, of dilatation, (W_d), is performed upon it. It is then conducted to the nozzles of the blast-pipes, where, in passing from the pressure p_1 to p_o, it performs a work, of expansion, (W_e). This work is performed at the expense of the intrinsic energy of the air, which becomes diminished to I_3, its temperature being correspondingly reduced to T_3. This work of expansion is, however, performed upon no external object, but is entirely absorbed in increasing the actual energy of the air itself. In passing out at the nozzles the air must overcome the resistance offered to its exit by the back pressure (p_o); it thereby performs a certain amount of work, (W_b). It finally leaves the blast-pipe possessed of a certain amount of actual energy (E), and of intrinsic energy (I_3).

In accordance with the fundamental physical law that energy can

neither be created nor destroyed, if to the original intrinsic energy of the air we add all accessions of intrinsic energy which it receives from external sources, and all work performed upon it (besides that which is absorbed in changing its intrinsic energy), the sum thus obtained must be equal to the sum of all work performed upon, and energy imparted to, external objects by the air, and of the energy, both actual and intrinsic, which it retains when it issues from the blast-pipes. This is expressed algebraically by the following equation:

$$I_0 + (I_1 - I_0) + W_p + (I_2 - I_1) + W_d = W_b + I_3 + E. \qquad (1.)$$

The work of compression, (W_0), does not appear in this equation, because it is entirely absorbed in the increase of the intrinsic energy of the air from I_0 to I_1. The amount of energy corresponding to this work is represented in the equation by the term, (I_1–I_0).

For a similar reason the loss in intrinsic energy which the air suffers in expanding (I_2–I_3), and the work which measures it (W), do not appear in the equation as distinct and separate terms, because the intrinsic energy thus lost is entirely converted into the work (W_e), and this work is entirely absorbed in increasing the actual energy of the air, as before explained. These two terms represent, therefore, the same amount of energy which is really included in the term E, of the value of which it constitutes a part.

By cancelling and transposing, equation (1) may be converted into the following simpler form:

$$E = (I_2 - I_3) + (W_p + W_d - W_b). \qquad (2.)$$

The actual energy of the jets of blast, issuing from the nozzles of the blast-pipes, is thus seen to be equal to the loss of intrinsic energy of the air in passing from the pressure (p_1) and the temperature (T_2) to the pressure (p_0) and the temperature (T_3), increased by the excess of the sum of the work of propulsion and of dilatation performed upon the air, over the work performed by it in overcoming the back pressure in the furnace. This actual energy is evidently derived from two sources and from only two, viz.: from the blowing-engine and from the hot-blast oven. In order to compare the amount of energy received from these two sources, we may arrange the second member of equation (2) in two groups of terms which shall represent these amounts respectively.

To do this, let us find the expression for the energy of the jets of blast under conditions exactly similar to the above, except that the blast is not heated. It is evident that the expression thus obtained

will be an exact measure of the energy received from the blowing-engine, and consequently of the work performed by it. We can obtain this expression readily from equation (1), by suppressing or modifying all terms which are affected by the heating of the blast. It thus becomes

$$I_o + (I_1 - I_o) + W_p = W'_b + E' + I_o. \tag{3.}$$

From this we obtain

$$E' = (I_1 - I_o) + W_p - W'_b. \tag{4.}$$

This represents the work performed by the blowing-engine. To obtain an expression for the actual energy received from the hot-blast oven, or, what is the same thing, of the mechanical work performed in the oven, we must subtract equation (4) from equation (2).

$$E - E' = (I_2 - I_1) - (I_3 - I_o) + W_d - (W_b - W'_b). \tag{5.}$$

This expression for the actual energy received from the hot-blast oven we find to be composed of four terms, two of which are positive and two negative. Of the positive terms, $(I_2 - I_1)$ represents the increase of the intrinsic energy of the air in consequence of its heating, W_d represents the work of dilatation. Of the two negative terms, $(I_3 - I_0)$ represents the increase of the final intrinsic energy of the air as it leaves the blast-pipes, and $(W_b - W'_b)$ represents the increase in the work of overcoming the back pressure which the air has to perform, owing to the increased velocity of the air due to its heating.

We can now arrange the second member of equation (2) as we proposed, so that the first group of terms shall represent the work of the blowing-engine and the second that of the hot-blast oven.

$$E = \{(I_1 - I_o) + W_p - W'_b)\} + \left\{ \begin{matrix} (I_2 - I_1) + W_d - (I_3 - I_o) \\ -(W_b - W'_b) \end{matrix} \right\}. \tag{6.}$$

We can readily obtain expressions for the values of the different terms of this equation.

$$I_o = \frac{p_o v_o}{\gamma - 1}.$$

$$(I_1 - I_o) = \frac{p_o v_o}{\gamma - 1}\left(\frac{T_1 - T_o}{T_o}\right).$$

$$(I_2 - I_1) = \frac{p_o v_o}{\gamma - 1}\left(\frac{T_2 - T_1}{T_o}\right).$$

$$I_3 = \frac{p_o v_o}{\gamma - 1}\frac{T_3}{T_o} = \frac{p_o v_o}{\gamma - 1}\frac{T_2}{T_1}.$$

$$(I_2 - I_o) = \frac{p_o v_o}{\gamma - 1}\left(\frac{T_2 - T_o}{T_o}\right) = \frac{p_o v_o}{\gamma - 1}\left(\frac{T_2 - T_1}{T_1}\right).$$

$$W_d = p_1 (v_2 - v_1) = p_o v_o \frac{T_2 - T_1}{T_o}.$$

$$W'_b = p_o v_o.$$

$$W_b = p_o v_2 = p_o v_o \frac{T_2}{T_o} = p_o v_o \frac{T_2}{T_1}.$$

$$(W'_b - W_b) = p_o v_o \left(\frac{T_2 - T_1}{T_1}\right).$$

$$W_p = p_1 v_1 = p_o v_o \frac{T_1}{T_o}.$$

$$E = Q \frac{u^2}{2g}.$$

Substituting these values in equation (6) we obtain

$$Q\frac{u^2}{2g} = \left\{\frac{p_o v_o}{\gamma - 1}\left(\frac{T_1 - T_o}{T_o}\right) + p_o v_o \frac{T_1}{T_o} - p_o v_o\right\}$$

$$+\left\{\frac{p_o v_o}{\gamma - 1}\left(\frac{T_2 - T_1}{T_o}\right) + p_o v_o\left(\frac{T_2 - T_1}{T_o}\right) - \frac{p_o v_o}{\gamma - 1}\left(\frac{T_2 - T_1}{T_1}\right) - p_o v_o\left(\frac{T_2 - T_1}{T_1}\right)\right\}. \quad (7.)$$

By successive simplifications we obtain,

$$Q\frac{u^2}{2g} = \left\{\frac{\gamma}{\gamma - 1} p_o v_o \frac{T_1 - T_o}{T_o}\right\} + \left\{\frac{\gamma}{\gamma - 1} p_o v_o \left(\frac{T_2 - T_1}{T_o} - \frac{T_2 - T_1}{T_1}\right)\right\}, \quad (8.)$$

$$Q\frac{u_2}{2g} = \left\{\frac{\gamma}{\gamma - 1} p_o v_o \frac{T_1 - T_o}{T_o}\right\} + \left\{\frac{\gamma}{\gamma - 1} p_o v_o \left(\frac{T_1 - T_o}{T_o} \cdot \frac{T_2 - T_1}{T_1}\right)\right\}, \quad (9.)$$

$$Q\frac{u^2}{2g} = \frac{\gamma}{\gamma - 1} p_o v_o \frac{T_1 - T_o}{T_o}\left(1 + \frac{T_2 - T_1}{T_1}\right). \quad (10.)$$

We can now compare the amounts of actual energy received from, or of mechanical work performed by, the blowing-engine and the hot-blast oven respectively, by comparing the two terms within the brackets of equation (10), viz.: 1 and $\frac{T_2 - T_1}{T_1}$. It is evident that for high values of T_2, or, in other words, when the blast is highly heated, the fraction $\frac{T_2 - T_1}{T_1}$ is greater than unity. In this case the effective mechanical work of the hot-blast oven is greater than that of the blowing-engine.

This fact may be made more striking by a few numerical examples. To utilize equation (10) for this purpose, it will be necessary to know the values of T_1 (the absolute temperature which the air acquires in its compression) for different values of p_1. The relation between these quantities may be readily obtained from the

equation representing the variation of temperature with pressure which we have already given, viz.:

$$\frac{T_1}{T_0} = \left(\frac{p_1}{p_0}\right)^{\frac{\gamma-1}{\gamma}}.$$

By means of this equation the following table has been calculated:

$\frac{p_1}{p_0}$	$\frac{p_1-p_0}{p_0}$	$\frac{T_1}{T_0}$	T_1	T_1-T_0
1.1	0.1	1.028	280.6° C.	7.6° C.
1.2	0.2	1.054	287.7°	14.7°
1.5	0.5	1.125	307.1°	34.1°
2.	1.	1.223	333.9°	60.9°

Let us assume that the blast has a pressure of about 7½ lbs. per square inch.

$\frac{p_1 - p_0}{p_0}$ is then equal to 0.5 and $\frac{p_1}{p_0}$ to 1.5.

The corresponding value of T_1 is 307.1° C., the temperature of the blast being raised 34.1° C. by the compression.

If under these circumstances the blast be heated to 341° C., (646° F.),

$$T_2 = 341° + 273° = 614°,$$

$$\frac{T_2}{T_1} = 2, \qquad \frac{T_2 - T_1}{T_1} = 1,$$

or the work of the hot-blast oven will be equal to that of the blowing-engine.

If the blast be heated to 495° C. (923° F.),

$$T_2 = 495° + 273° = 768°,$$

$$\frac{T_2}{T_1} = 2.5, \qquad \frac{T_2 - T_1}{T_1} = 1.5,$$

or the work of the hot-blast oven will be one and a half times that of the blowing-engine.

If the blast be heated to 648° C. (1198° F.),

$$T_2 = 648° + 273° = 921°,$$

$$\frac{T_2}{T_1} = 3, \qquad \frac{T_2 - T_1}{T_1} = 2,$$

or the work of the hot-blast oven will be twice that of the blowing-engine.

If the blast be heated to 802° C. (1476° F.),

$$\frac{T_2}{T_1} = 3\tfrac{1}{2}, \quad \frac{T_2 - T_1}{T_1} = 2\tfrac{1}{2},$$

or the work of the hot-blast oven will be two and a half times that of the blowing-engine.

If a blowing-engine be required to furnish 5000 cubic feet of air per minute, at a pressure of about $7\frac{1}{3}$ lbs. per square inch, and if the blast be heated in fire-brick ovens to 800° C., the rate of the effective work of the engine will be about 135 H. P., while that of the oven will be about 337 H. P.

The relative magnitudes of the different amounts of energy, represented by the terms of equation (6), can be best shown by a diagram, constructed in the ordinary manner, by laying off the volumes as abscissas and the pressures as ordinates. I have constructed such a diagram for the case just chosen, viz.: 5000 cubic feet of air per minute subjected to a pressure of $7\frac{1}{3}$ lbs. per square inch and heated to 800° C.

Referring to equation (6), we find the terms of its second member divided into two groups, representing respectively the amounts of actual energy which the blast derives from the blowing-engine and from the hot-blast oven. Commencing with the first group, or that representing the amount of energy derived from the blowing-engine, we find it to be composed of the three terms, $(I_1 - I_0)$, W_p, and $-W'_b$. The first of these $(I_1 - I_0)$, represents the increase of intrinsic energy which the air receives during its compression, or the amount of work which is converted into heat during the compression, and which again appears as work during the expansion of the air as it leaves the blast-pipes. This quantity of energy is represented by the area $v_1 a b v_0 v_1$. (See diagram on p. 323.)

The second term, W_p, represents the work of propulsion performed in the blowing-engine. This is represented on the diagram by the area $o p_1 a v_1 o$.

The third term, $-W'_b$, represents the work performed by the air in overcoming the back pressure in the furnace. This is represented on the diagram by the area $o p_0 b v_0 o$.

The algebraic sum of these three terms, or the actual energy which the blast receives from the blowing-engine, must be represented on the diagram by $v_1 a b v_0 v_1 + o p_1 a v_1 o - o p_0 b v_0 o$, or by

the area $p_0 p_1 a.b p_0$. This area is precisely that of an indicator diagram taken from the blowing-cylinder, neglecting the disturbances introduced by the lifting of the valves, the dead space, etc.

In considering the second group of terms, or that representing the amount of actual energy which the blast receives from the hot-blast oven, it will be more convenient to rearrange the terms to avoid the introduction of indefinitely prolonged areas. The second group of terms of the second member of equation (6) is

$$(I_2 - I_1) + W_d - (I_3 - I_0) - (W_b - W'_b) \quad .$$

This is evidently equal to

$$(I_2 - I_3) - (I_1 - I_0) + W_d - (W_b - W'_b) \quad .$$

The first of these new terms $(I_2 - I_3)$, represents the amount of heat which is converted into work during the expansion of the blast as it leaves the blast-pipes. This is represented on the diagram by the area $v_2 c d v_3 v_2$.

The second term, $-(I_1 - I_0)$, represents the amount of heat converted into work during the expansion of the blast when it is not heated. It is represented on the diagram by the area $v_1 a b v_0 v_1$, as before stated.

The difference between these areas, viz.:

$$v_2 c d v_3 v_2 - v_1 a b v_0 v_1,$$

represents the gain of actual energy at the expense of intrinsic energy, which the blast acquires in consequence of its being heated, or the difference between the amount of heat which is converted into work when the blast is heated, and that which is similarly converted, when it is not heated.

The third term, W_d, represents the work of dilatation of the blast which its heating occasions. This is represented by the area $v_1 a c v_2 v_1$.

The fourth term, $-(W_b - W'_b)$, represents the increase in the work of overcoming the back pressure in the furnace, occasioned by the heating of the blast. This is represented on the diagram by the difference between the areas $op_0 d v_3 o$, and $op_0 b v_0 o$, or by the area $v_0 b d v_3 v_0$.

If we take the algebraic sum of these areas, we find that the actual energy which the blast receives from the hot-blast oven is represented on the diagram by

$$(v_1 a c v_2 v_1 + v_2 c d v_3 v_2) - (v_1 a b v_0 v_1 + v_0 b d v_3 v_0),$$

or by the area $b a c d b$.

The total actual energy of the blast is represented by the sum of the two areas representing respectively the two groups of terms, *i. e.*, by

$$p_0 p_1 a b p_0 + b a c d b,$$

or by the area $p_0 p_1 c d p_0$.

It is easy to see from the foregoing what becomes of the mechani-

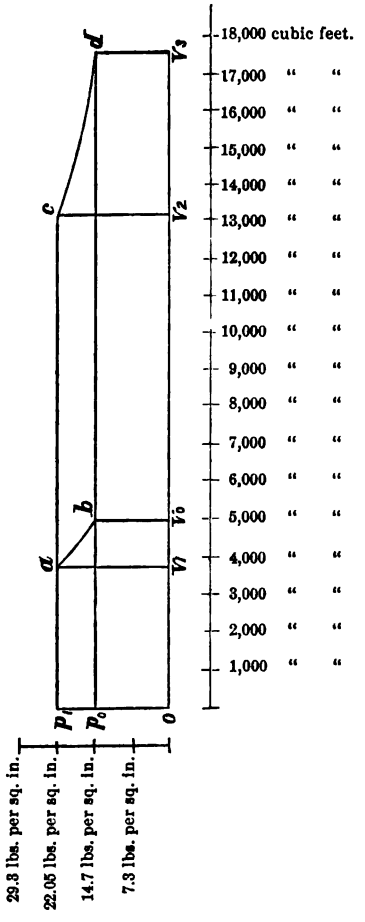

cal work performed in the hot-blast oven. It is entirely absorbed in increasing the actual energy of the blast.

The question may be asked, "How is it possible that so large an amount of work can be performed in the hot-blast oven and yet pass unperceived, so as apparently to produce no useful effect?" The best manner of replying to this objection is to examine into the conditions which affect the weight, the pressure and the actual

energy of the blast, and the work of the blowing-engine with both cold and hot-blast.

To do this, let us assume that we have a blast furnace at our disposal which we can work with cold or with hot-blast at our pleasure, and let us compare the working of the blowing-engine and the conditions of the blast under these different circumstances.

The mechanical conditions of the blast which it is important to determine are the weight of the blast, its pressure and the actual energy of the jets of blast as they enter the furnace. The means at our disposal to regulate these quantities are the speed of the engine, the number of tuyeres, the dimensions of the nozzles, and the temperature of the blast. We cannot, however, cause to vary at our will the speed of the engine and the number and size of the nozzles of the blast-pipes. A limit to the variations in the ratio between the first and the product of the two last of these quantities is imposed by the amount of power which we have at our disposal for driving the engine. The work of the engine is therefore another important element of the question to be considered. Our task will be, then, to find expressions for the weight, pressure and actual energy of the blast and for the work of the blowing-engine, in terms of those quantities which it is in our power to cause to vary within certain limits, viz.: the speed of the engine, the total area offered for the passage of the blast into the furnace, and the temperature of the blast.

First, in case the blast be not heated, let

Q' = the weight of blast driven into the furnace in one second.

p_1' = the pressure to which it is compressed.

δ_1' = the weight of a cubic foot of air at p_1' and T_1'.*

T_1' = the absolute temperature of the blast at p_1', supposing no heat to have been transmitted during the compression, and that the original temperature and pressure of the blast were T_o and p_o respectively.

T_o = the absolute temperature of melting ice = 273° C.

p_o = the normal pressure of the atmosphere.

δ_o = the weight of a cubic foot of air at p_o and T_o.

a = the area of the cross section of the blast-cylinder.

* Q', p_1', δ_1', and all other symbols of quantities which vary with the pressure of the blast, represent mean values of their respective quantities. There is no need in this discussion to take into account the fluctuations in these quantities, which result from the imperfect manner in which the receiver fulfils its functions as regulator of the pressure of the blast.

l = the length of stroke of the piston of the blast-cylinder.
n' = the number of revolutions of the fly-wheel shaft per minute.
k' = the number of tuyeres in operation.
d' = the diameter of the nozzle of each blast-pipe (we suppose all the nozzles in use at one time to be of the same size).
m = coefficient of contraction of each jet of blast, as it leaves the blast-pipe.
u' = the velocity of the blast issuing from the blast-pipe.
f' = a coefficient, expressing the ratio between the volume of air actually driven into the furnace reduced to p_o and T_o, and the volume engendered by the piston.
W' = the work of the blowing-engine.
E' = the actual energy of the jets of blast.

Secondly, in case the blast be heated, let

$Q'', p_1'', \delta_1'', T_1'', n'', k'', d'', u'', f'', W'', E''$ represent quantities corresponding to $Q', p', \delta_1', T_1', n', k', d', u', f', W'$, and E' respectively.

Further, let

T_2 = the absolute temperature to which the blast is heated.
T_3 = the absolute temperature of the blast after its expansion.
δ_2 = the weight of a cubic foot of air at pressure p_1'' and temperature T_2.
δ_3 = the weight of a cubic foot of air at pressure p_o and temperature T_3.

Let us now endeavor to obtain expressions for the values of Q', Q'', p_1', p_1'', W', W'' and E', E'' in terms of the quantities within our control, viz.: $f'n'$, $f''n''$, $k'd'$, $k''d''$, and $\frac{T_2}{T_1''}$. The coefficients f' and f'' vary with the conditions of the blowing-engine, the blast-pipe, etc. With the same engine, however, working under nearly similar conditions, and with the hot-blast apparatus in perfect order, as we shall assume it to be, the difference between the values of f' and f'' might be neglected without serious inaccuracy. We shall therefore assume that $f' = f''$. We can also assume that the number of tuyeres in use shall be the same with both hot and cold blast, and that the variation in the total area of orifices for the issue of the blast is produced by changing the size of the nozzles.

In this case $k' = k''$.

The problem becomes thus somewhat simpler, as the terms in which the values sought are to be expressed become reduced to n', n'', d', d'', and $\frac{T_2}{T_1''}$.

We will also assume that the blowing-engine has one double-acting blast-cylinder.

The expression for the weight of blast driven into the furnace is readily obtained.

With cold-blast we have

$$Q' = f' a\, l \frac{n'}{30} \delta_0 , \tag{11.}$$

and with hot-blast

$$Q'' = f' a\, l \frac{n''}{30} \delta_0 . \tag{12.}$$

Dividing (12) by (11) we get

$$\frac{Q''}{Q'} = \frac{n''}{n'} .$$

The weight of blast delivered is thus seen to be directly proportional to the number of revolutions of the shaft per minute.

In order to obtain expressions for the pressures to which the blast is subjected, under the varying conditions of the quantities within our control, we must have recourse to the expression for the velocity of efflux of air.

In the case of cold-blast this expression is

$$u' = \sqrt{2g \frac{p'_1}{\delta_1} \frac{\gamma}{\gamma - 1} \left\{ 1 - \left(\frac{p_0}{p'_1} \right)^{\frac{\gamma-1}{\gamma}} \right\}} . \tag{13.}$$

$$\text{But } \frac{p'_1}{\delta_1} = \frac{p_0}{\delta_0} \frac{T'_1}{T^0} \text{ and } \left\{ 1 - \left(\frac{p_0}{p'_1} \right)^{\frac{\gamma-1}{\gamma}} \right\} = \frac{T'_1 - T_0}{T'_1} .$$

Substituting these values in equation (13), we have,

$$u' = \sqrt{2g \frac{p_0}{\delta_0} \frac{\gamma}{\gamma - 1} \frac{T'_1}{T_0} \left(\frac{T'_1 - T_0}{T'_1} \right)} = \sqrt{2g \frac{p_0}{\delta_0} \frac{\gamma}{\gamma - 1} \left(\frac{T'_1 - T_0}{T_0} \right)} . \tag{14.}$$

$$\text{But } \frac{T'_1 - T_0}{T_0} = \left\{ \left(\frac{p'_1}{p_0} \right)^{\frac{\gamma-1}{\gamma}} - 1 \right\} .$$

Substituting this value in equation (14), we get,

$$u' = \sqrt{2g \frac{p_0}{\delta_0} \frac{\gamma}{\gamma - 1} \left\{ \left(\frac{p'_1}{p_0} \right)^{\frac{\gamma-1}{\gamma}} - 1 \right\}} . \tag{15.}$$

If we include the constant factors in one constant coefficient, that is, if we make

$$2g \frac{p_o}{\delta_o} \frac{\gamma}{\gamma-1} = C,$$

we have

$$u' = \sqrt{C \left\{ \left(\frac{p'_1}{p_o} \right)^{\frac{\gamma-1}{\gamma}} - 1 \right\}} . \tag{16.}$$

Solving this equation with reference to $\frac{p_1'}{p_o}$, we get

$$\frac{p'_1}{p_o} = \left\{ \frac{u'^2}{C} + 1 \right\}^{\frac{\gamma}{\gamma-1}} . \tag{17.}$$

In the case of hot-blast we have the expression,

$$u'' = \sqrt{2g \frac{p''_1}{\delta_2} \frac{\gamma}{\gamma-1} \left\{ 1 - \left(\frac{p_o}{p''_1} \right)^{\frac{\gamma-1}{\gamma}} \right\}} . \tag{18.}$$

But $\frac{p''_1}{\delta_2} = \frac{p''_1}{\delta''_1} \frac{T_2}{T''_1} = \frac{p_o}{\delta_o} \frac{T''_1}{T_o} \frac{T_2}{T''_1}$.

By a similar series of substitutions, as in the case of cold-blast, we obtain finally,

$$u'' = \sqrt{C \frac{T_2}{T''_1} \left\{ \left(\frac{p''_1}{p_o} \right)^{\frac{\gamma-1}{\gamma}} - 1 \right\}} , \tag{19.}$$

Solving which with reference to $\frac{p_1''}{p_o}$, we get

$$\frac{p''_1}{p_o} = \left\{ \frac{u''^2}{C} \frac{T''_1}{T_2} + 1 \right\}^{\frac{\gamma}{\gamma-1}} . \tag{20.}$$

To utilize equations (17) and (20) for our purpose, we must find the values of u'^2 and u''^2 in terms of the quantities within our control, and substitute the values, thus found, in these equations. To do this, we can find the expression for the weight of blast entering the furnace per second in terms of the velocity of its efflux from the tuyeres.

This expression is, for cold-blast,

$$Q' = k'm \frac{\pi}{4} d'^2 u' \delta_o , \tag{21.}$$

and for hot-blast,

$$Q'' = k'm \frac{\pi}{4} d''^2 u'' \delta_2 . \tag{22.}$$

But $\delta_2 = \delta_o \frac{T_o}{T_2} = \delta_o \frac{T''_1}{T_2}$.

$$Q'' = k'm \frac{\pi}{4} d''^2 u'' \delta_o \frac{T''_1}{T_2} . \tag{23.}$$

We have, however, already found expressions for the weights of hot and of cold blast entering the furnace per second. We can substitute these values for Q′ and Q″ in equations (21) and (23), and obtain for cold-blast,

$$f' a l \frac{n'}{30} \delta_o = k' m \frac{\pi}{4} d'^2 u' \delta_o \quad . \tag{24.}$$

and for hot-blast,

$$f' a l \frac{n''}{30} \delta_o = k' m \frac{\pi}{4} d''^2 u'' \delta_o \frac{T''_1}{T_2} \quad . \tag{25.}$$

Let $f' a l \frac{\delta_o}{30} = A$, and $k' m \frac{\pi}{4} \delta_o = B$.

$$A n' = B d'^2 u' \quad . \tag{26.}$$

$$A n'' = B d''^2 u'' \frac{T''_1}{T_2} \quad . \tag{27.}$$

Solving these equations with reference to u′ and u″, respectively, we get

$$u' = \frac{A}{B} \frac{n'}{d'^2} \quad , \tag{28.}$$

$$u'' = \frac{A}{B} \frac{n''}{d''^2} \frac{T_2}{T''_1} \quad . \tag{29.}$$

and squaring, we get

$$u'^2 = \frac{A^2}{B^2} \frac{n'^2}{d'^4} \quad , \tag{30.}$$

$$u''^2 = \frac{A^2}{B^2} \frac{n''^2}{d''^4} \left(\frac{T_2}{T''_1}\right)^2 . \tag{31.}$$

Substituting these values of u'^2 and u''^2 in equations (17) and (20), we obtain

$$\frac{p'_1}{p_o} = \left\{ \frac{A^2}{B^2 C} \frac{n'^2}{d'^4} + 1 \right\}^{\frac{\gamma}{\gamma-1}} \quad . \tag{32.}$$

and

$$\frac{p''_1}{p_o} = \left\{ \frac{A^2}{B^2 C} \frac{n''^2}{d''^4} \frac{T_2}{T''_1} + 1 \right\}^{\frac{\gamma}{\gamma-1}} . \tag{33.}$$

The expression for the effective work of the blowing-engine, when the blast is not heated, is

$$W_1 = p_o v_o \frac{\gamma}{\gamma-1} \left\{ \left(\frac{p'_1}{p_o}\right)^{\frac{\gamma-1}{\gamma}} - 1 \right\} \quad . \tag{34.}$$

But $v_o = f' a l \frac{n'}{30}$.

$$W_1 = \frac{p_o}{\delta_o}\frac{\gamma}{\gamma-1} f' a l \frac{\delta_o}{30} n' \left\{ \left(\frac{p'_1}{p_o}\right)^{\frac{\gamma-1}{\gamma}} - 1 \right\} . \quad (35.)$$

But $\frac{p_o}{\delta_o}\frac{\gamma}{\gamma-1} = \frac{C}{2g}$ and $f' a l \frac{\delta_o}{30} = A.$

$$W_1 = \frac{C}{2g} A n' \left\{ \left(\frac{p'_1}{p_o}\right)^{\frac{\gamma-1}{\gamma}} - 1 \right\} . \quad (36.)$$

From equation (16) we get

$$\left\{ \left(\frac{p'_1}{p_o}\right)^{\frac{\gamma-1}{\gamma}} - 1 \right\} = \frac{u'^2}{C} ,$$

and substituting for u'^2 its value, given by equation (30), we obtain

$$\left\{ \left(\frac{p'_1}{p_o}\right)^{\frac{\gamma-1}{\gamma}} - 1 \right\} = \frac{A^2}{B^2 C} \frac{n'^2}{d'^4} .$$

Substituting this value in equation (36), we get

$$W' = \frac{A^3}{2g B^2} \frac{n'^3}{d'^4} . \quad (37.)$$

In a precisely similar way we can obtain for the work of the blowing-engine, when the blast is heated,

$$W'' = \frac{A^3}{2g} \frac{n''^3}{B^2} \frac{T_2}{d''^4 T''_1} . \quad (38.)$$

Dividing (36) by (35), we obtain

$$\frac{W''}{W'} = \frac{n''^3}{n'^3} \frac{d'^4}{d''^4} \frac{T_2}{T''_1} . \quad (39.)$$

The work of the blowing-engine is thus seen to be directly proportional to the cube of the number of revolutions of the shaft per minute, to be inversely proportional to the fourth powers of the diameters of the nozzles, and, in the case of hot blast, to be directly proportional to the ratio between the temperature of the blast as it leaves, and the temperature as it enters the hot-blast oven.

The expression for the actual energy of the blast, when it is cold, is

$$E' = Q' \frac{u'^2}{2g} . \quad (40.)$$

But by equation (11)

$$Q' = f' a l \frac{n'}{30} \delta_o = A n' ,$$

and by equation (30)

$$u'^2 = \frac{A^2}{B^2} \frac{n'^2}{d'^4} .$$

Substituting these values in equation (40) we get

$$E' = \frac{A^2}{2g\ B^2}\ \frac{n'^3}{d'^4}\ . \qquad (41.)$$

This expression is exactly the same as that obtained for the effective work of the blowing-engine, as in this case it should be. In a similar way, we can obtain for the energy of the jets of hot-blast the expression

$$E'' = \frac{A^2}{2g\ B^2}\ \frac{n''^3}{d''^4}\left(\frac{T_2}{T''_1}\right)^2 . \qquad (42.)$$

This expression is not the same as that obtained for the work of the blowing-engine with hot-blast, but is greater in the ratio $\frac{T_2}{T''_1}$, as we have already found.

Dividing equation (42) by (41) we obtain

$$\frac{E''}{E'} = \frac{n''^3}{n'^3}\ \frac{d'^4}{d''^4}\left(\frac{T_2}{T''_1}\right)^2 . \qquad (43.)$$

Having thus accomplished the object which we had proposed, we shall need, in the further discussion of the subject, to employ only those equations which express the variations in the weight of the blast, the work of the blowing-engine and the actual energy of the blast under the different conditions which we can introduce at our pleasure, with reference to the speed of the engine, the diameter of the nozzles and the temperature of the blast.

The equations which we shall thus employ are the three following:

$$\frac{Q''}{Q'} = \frac{n''}{n'}\ ,$$

$$\frac{W''}{W'} = \frac{n''^3}{n'^3}\ \frac{d'^4}{d''^4}\ \frac{T_2}{T''_1}\ , \qquad (39.)$$

$$\frac{E''}{E'} = \frac{n''^3}{n'^3}\ \frac{d'^4}{d''^4}\left(\frac{T_2}{T''_1}\right)^2 . \qquad (43.)$$

From the first of these equations it will be seen that, under the conditions which we have assumed (that is, neglecting the changes which variations in the pressure of the blast produce in the coefficient f', which represents the ratio between the volume of air actually driven into the furnace, reduced to p_o and T_o, and the volume engendered by the piston), the weight of blast which enters the furnace depends only upon the speed of the blowing-engine, no matter how much the other conditions of the blast may vary.

The other two equations contain five variable quantities, viz.:

$$\frac{W''}{W'}, \quad \frac{E''}{E'}, \quad \frac{n''}{n'}, \quad \frac{d'}{d''}, \quad \frac{T_2}{T''_1}.$$

It is evident that we can assign arbitrary values to any three of these quantities, and obtain from the equations the values of the other two; or we can assign arbitrary values to any two of these quantities, and the equations will give us the relations between two of the others and the third. As our object in this discussion is to find the effect of heating the blast upon its mechanical conditions, we shall consider some of the different cases which can arise if we assign arbitrary values to any two of the four quantities, $\frac{W''}{W'}, \frac{E''}{E'}, \frac{n''}{n'}, \frac{d'}{d''}$; and obtain equations expressing the variations of the other two with the temperature of the blast. Of the six cases which can possibly arise under these conditions it will be interesting to consider four.

1st. Suppose that we make no change in the size of the nozzles after substituting hot for cold blast, and that the work of the blowing-engine remains the same as before, that is, let $d' = d''$, $W' = W''$,

$$\text{or } \frac{d'}{d''} = 1, \quad \frac{W''}{W'} = 1.$$

Equation (39) then becomes

$$\frac{n''^3}{n'^3} \frac{T_2}{T''_1} = 1,$$

$$n'' = \sqrt[3]{\frac{T''_1}{T_2}}, \qquad Q'' = Q' \sqrt[3]{\frac{T''_1}{T_2}}.$$

Equation (43) becomes, substituting for $\frac{n''}{n'}$ its value, just found,

$$\frac{E''}{E'} = \frac{T_2}{T''_1}.$$

In this case the mechanical effect of heating the blast will seem to be rather disadvantageous than otherwise. The speed of the engine will be diminished after the heating of the blast, and less blast will be forced into the furnace in the ratio $\sqrt[3]{\frac{T''_1}{T_2}}$. It is none the less true, however, that there is a mechanical work performed in the hot-blast oven, and this is rendered evident by the equation showing the variation of the actual energy of the blast with the temperature.

The actual energy of the blast is seen to be increased after its heating in the ratio $\frac{T_2}{T''_1}$.

2d. Let us assume, as before, that no change is made in the nozzles of the blast-pipes, but that we have an excess of power at our disposal, so that we can drive the same weight of air into the furnace when the blast is hot as we can when it is cold, notwithstanding the higher pressure to which we must subject it.

In this case $d'' = d'$, and $Q'' = Q'$, consequently $n'' = n'$, or

$$\frac{d'}{d''} = 1, \quad \frac{n''}{n'} = 1.$$

Equation (39) then becomes

$$\frac{W''}{W'} = \frac{T_2}{T''_1},$$

and equation (43) becomes

$$\frac{E''}{E'} = \left(\frac{T_2}{T''_1}\right)^2.$$

Here, also, as in the previous case, the mechanical effect of heating the blast seems to be a loss rather than a gain of work. In order to drive the same quantity of blast into the furnace after as before its heating, the work of the blowing-engine must be increased in the ratio $\frac{T_2}{T''_1}$. Here again, however, the equation expressing the variation in the actual energy of the blast proves that the loss is apparent and not real, and that there is, on the contrary, an actual gain of work, for, while the work of the blowing-engine is increased in the ratio $\frac{T_2}{T''_1}$, the actual energy of the blast is simultaneously increased in the ratio $\left(\frac{T_2}{T''_1}\right)^2$.

3d. It may be proposed to keep the quantity of blast constant, without increasing the work of the blowing-engine; this can readily be done by changing the nozzles of the blast-pipes. In this case we assume that $W''=W'$, and $Q''=Q'$, consequently $n''=n'$, or,

$$\frac{W''}{W'} = 1, \quad \frac{n''}{n'} = 1.$$

Equation (39) then becomes

$$\frac{d''^4}{d'''^4}\,\frac{T_2}{T''_1} = 1, \text{ or } \frac{d''}{d'} = \sqrt[4]{\frac{T_2}{T''_1}}.$$

and equation (43) becomes, after substituting for $\frac{d''^4}{d'''^4}$ its value,

$$\frac{E''}{E'} = \frac{T_2}{T''_1}.$$

We see thus that in order to fulfil the conditions which we have imposed, we must increase the diameters of the nozzles in the ratio $\sqrt[4]{\frac{T_2}{T''_1}}$. When we have made this change, there will seem to be absolutely no mechanical effect produced by the heating of the blast, the same work being required to force the same quantity of air into the furnace, under the same pressure, both before and after the heating of the blast. The fact remains, however, that there is a certain amount of mechanical work performed in the hot-blast oven, and this work is rendered evident, as in the two previous cases, in the increased actual energy of the blast. This quantity is increased after the heating of the blast in the ratio $\frac{T_2}{T''_1}$.

The three foregoing cases represent the general experience in blast-furnace practice since the introduction of the custom of heating the blast. It was soon discovered that if the nozzles were not changed, it was impossible to drive as great a weight of hot as of cold blast into a furnace, without increasing the pressure. The expedient of increasing the size of the nozzles was then resorted to, but carried only so far as to permit the introduction of the required weight of blast at the same pressure, as had been found to be required when cold blast was employed. In doing this, the assumption seems to have been made that the pressure was the mechanical condition of the blast which it was important to regulate, and the actual energy of the blast seems to have been left entirely out of the question. Whether this assumption was drawn from the results of actual experience bearing upon this question, or was a deduction by false analogy from the results of experience when cold-blast only was employed, I do not feel able positively to decide. That the actual energy of the blast should have been left out of consideration, and the great increase in it, when hot-blast is employed under ordinary conditions, should have passed unnoticed, is not wonderful when we reflect that the effect of this increase was not likely to be injurious, and any beneficial effect which it might have could only be manifested mechanically by the actual experiment of employing a lower pressure with hot than with cold blast, an experiment which, as far as I know, has never been made. Any physical or chemical manifestations of a beneficial effect in increasing the actual energy of the blast were very likely to remain unassigned to their proper cause, forming, as they did, a portion of the complex and much-disputed question with regard to the causes of the economy in the work-

ing of the furnace which had resulted from the employment of the hot-blast. These remarks, it appears to me, sufficiently explain the apparent anomaly to which attention has been called, that so large an amount of mechanical work could be performed in the hot-blast oven, and yet pass generally unperceived.

4th. Finally, let us impose the condition that the actual energy of the blast shall remain constant, the weight of the blast being also kept constant, as in the two previous cases. In this case, $E'' = E'$, and $Q'' = Q'$, consequently $n'' = n'$,

$$\text{or} \quad \frac{E''}{E'} = 1, \quad \frac{n''}{n'} = 1.$$

Equation (43) would then become

$$\frac{d''^4}{d''^4} \left(\frac{T_2}{T''_1}\right)^2 = 1,$$

$$\text{or} \quad \frac{d''^2}{d'^2} = \frac{T_2}{T''_1}.$$

Substituting this value in equation (39), it becomes

$$\frac{W''}{W'} = \frac{T''_1}{T_2}.$$

Here, at last, we have the work of the hot-blast oven made palpably evident in the diminution which it permits to be made in the work of the blowing-engine. By adopting the simple device of increasing the diameters of the nozzles of the blast-pipes in the ratio $\sqrt{\frac{T_2}{T''_1}}$, we can drive the same weight of air into the furnace with the same amount of actual energy when the blast is heated as when it is cold, but with a diminished expenditure of power on the part of the blowing-engine; the work of the engine being less with hot than it is with cold-blast, in the ratio $\frac{T''_1}{T_2}$. If the temperature of the hot-blast (T_2) be high, the decrease in the work of the engine is considerable.

Let us take for instance the case already given of an engine required to furnish 5000 cubic feet of air per minute at a pressure of about $7\frac{1}{8}$ lbs. per square inch. The rate of work required of the engine, if the blast were not heated, would be 135 H. P., as we have found. If now the blast be heated in fire-brick ovens to about 800° C., and the nozzles of the tuyeres be at the same time enlarged to such a degree as to maintain the actual energy of the blast constant, the pressure of the blast will be reduced to about 1.85 lbs. per

square inch, and the rate of work of the blowing-engine will be less than it was with cold-blast in the ratio,

$$\frac{T''_1}{T_2} = \frac{282° \text{ C.}}{1073° \text{ C.}} = 0.263 ,$$

being reduced to about 35½ H. P., or a little over one-fourth of its former amount.

We must bear in mind, however, that our calculations refer to the net work of the blowing-engine, and that we have left out of consideration all passive resistances of the engine, the friction of the air in the pipes and the excess of the back pressure in the furnace above the atmospheric pressure. When the blast is heated, it is evident that the loss of head due to friction between the receiver and the tuyeres is much increased by the passage of the blast through the oven. The increase of pressure required to force the air through fire-brick ovens of the ordinary types is very slight; in well-arranged ovens with cast-iron pipes, it should not exceed half a pound per square inch, although I have been informed that the loss of pressure from receiver to tuyeres has been found to be as great as 1½ lbs. On these accounts the actual saving in practice would not be so great as appears from the calculation made above, although there is no doubt that, after all corrections had been made, the saving would still be found to be very great. Such a case, however, as has just been supposed would not be likely to occur in practice, as cold-blast is never used with anthracite, the only fuel which requires such a high pressure as that assumed. A case more likely to present itself would be that of an anthracite furnace receiving blast at a pressure of about 7⅓ lbs. per square inch, the temperature of which should be raised from 327° C. to 777° C. by the substitution of fire-brick ovens for insufficient and imperfectly planned ovens with cast-iron pipes. The work required of the blowing-engine to drive the same weight of blast with equal energy into the furnace would be less in consequence of the change in the ratio,

$$\frac{T_2}{T'_2} = \frac{600° \text{ C.}}{1050° \text{ C.}} = 0.571 .$$

In case the rate of work of the engine had been 135 H. P. before the change, it would be but 77 H. P. after it. In this case the fact, that by the substitution of fire-brick ovens for those with cast-iron pipes the loss of head due to friction would be diminished, would go far towards neutralizing the effect of the other causes of inaccuracy mentioned above, so that this result may be considered as a

tolerably close approximation to the actual saving which might be expected in practice.

The question here naturally arises, whether it would not be possible in practice to realize this economy. It is difficult to give a decided answer to this question in the light of our present knowledge. It is, in my opinion, safe to assume that the only object of subjecting the blast to a pressure in excess of that existing in the hearth of a furnace is to impart to the jets of blast a certain amount of actual energy. This actual energy is required to overcome the resistance offered to the passage of the blast across the hearth, and probably also to force the particles of air to a certain depth into the pores of those lumps of fuel upon which the jets impinge, so as to bring the oxygen of the blast into contact with a sufficiently large surface of carbon, and thus cause an active combustion to CO within a restricted space. If this view be correct, an addition to the actual energy of the blast from any source, other than the blowing-engine, will permit a corresponding diminution in the work of the engine, provided that the cause of the additional energy of the blast does not at the same time increase to an equal degree the resistances which the blast must overcome, and consequently the actual energy which it is required to possess. It appears to me probable that the heating and consequent rarefaction of the blast increase the resistances which must be overcome in order that a given weight of air may penetrate to the middle of the hearth, and be brought into close contact with a sufficiently large quantity of carbon before it has risen to any considerable height above the tuyeres. To what extent, however, these resistances are increased, whether or not to such a degree as to neutralize the additional actual energy which results from the heating of the blast, is a question which I shall not attempt in this paper to discuss, especially as it can be decided by actual experiment more surely, if not more readily, than by a theoretical discussion. The results of general experience in blast furnace practice furnish no indication that it is possible to diminish the pressure of the blast when its temperature is raised. This may possibly be due, however, to the fact, already suggested, that the increase in the actual energy of the blast, consequent to its heating, has been ignored, and that in consequence the experiment has never been made of diminishing the pressure as the temperature of the blast was increased. Experiments in such an important and delicate process as that of the blast furnace are not to be lightly made, but it appears to me that the subject is of sufficient import-

ance to warrant the institution of a series of experiments to investigate it, especially as such experiments, if conducted with sufficient caution, would probably not seriously derange the working of the furnaces in which they should be made.

A subject of some interest in connection with this discussion is the determination of the amount of heat which is converted into mechanical energy in the expansion of the blast, and of the amount of heat which is required in order to restore to the blast in the furnace the temperature which it possessed before its expansion. These two quantities of heat are not equal, as might be supposed, but the latter is greater than the former in the ratio γ, *i. e.*, the ratio between the specific heat of air at constant pressure and that at constant volume. The reason of this will be obvious when we reflect, that the work of expansion is performed entirely at the expense of the intrinsic energy of the air, and that the heat thus lost by the air is wholly converted into this work. The heat thus converted into work must therefore be exactly equal in amount to the heat which would be required to raise the temperature of the blast to its original state without performing any mechanical work. This condition is evidently fulfilled when the volume of the air remains constant during its heating. In the hearth of the blast furnace, however, this condition is not fulfilled. There it is not the volume but the pressure of the air which remains constant during the heating. The amount of heat which is required in this case to restore to the blast the temperature which it possessed before its expansion consists not only of the heat required to increase its intrinsic energy, but also of the heat which is converted into work in the dilatation of the air during its reheating.

From the foregoing analytical discussions we can readily obtain expressions in mechanical units for these various quantities of heat. To utilize these expressions in heat calculations, it is only necessary to convert them into thermal units, which can readily be done by dividing them by the mechanical equivalent of the thermal unit which we adopt.

The amount of heat which is absorbed in the expansion of the blast is equal to the loss of intrinsic energy which the blast suffers in expanding.

$$H = I_2 - I_3 .$$

We have already obtained expressions for both of these amounts of intrinsic energy.

$$I_2 = \frac{p_o v_o}{\gamma - 1} \frac{T_2}{T_o} ,$$

$$I_3 = \frac{p_o v_o}{\gamma - 1} \frac{T_3}{T_o} ,$$

therefore

$$H = \frac{p_o v_o}{T_o} \frac{1}{\gamma - 1} (T_2 - T_3) .$$

But we have

$$\frac{T_2}{T_3} = \left(\frac{p_1}{p_o}\right)^{\frac{\gamma-1}{\gamma}} = \frac{T_1}{T_o} ,$$

therefore

$$T_3 = \frac{T_o}{T_1} T_2 ,$$

and

$$T_2 - T_3 = T_2 \frac{T_1 - T_o}{T_1} = T_2 \left(1 - \left(\frac{p_o}{p_1}\right)^{\frac{\gamma-1}{\gamma}}\right).$$

Substituting this value of T_2–T_3 in the expression for H, we get

$$H = \frac{p_o v_o}{T_o} \frac{1}{\gamma - 1} T_2 \left(1 - \left(\frac{p_o}{p_1}\right)^{\frac{\gamma-1}{\gamma}}\right).$$

Let us obtain the numerical value of the constant coefficient $\left(\frac{p_o v_o}{T_o} \frac{1}{\gamma - 1}\right)$ for one pound avoirdupois of air.

p_o = 2116.4 lbs. per square foot.
v_o = 12.387 cubic feet.
T_o = 273° C.
$\gamma - 1 = 0.408$.

$C_m = \frac{p_o v_o}{T_o} \frac{1}{\gamma - 1} = \frac{95.67}{0.408} = 234.5$ foot pounds per degree Centigrade.

To convert the expression for H into thermal units, we must divide this constant coefficient by the mechanical equivalent in foot pounds of our thermal unit. Since we have adopted the pound as our unit of weight, and the degree Centigrade as our unit of temperature, our thermal unit must evidently be the pound Centigrade heat unit, or the amount of heat required to raise the temperature of one pound of water, at the temperature of its maximum density, one degree Centigrade. The mechanical equivalent of this thermal unit is 1389.6 foot pounds.

Our constant coefficient thus becomes,

$$C_t = \frac{234.5}{1389.6} = 0.169$$

This is the value of the specific heat of air at constant volume, (S_v)

$$C_t = S_v$$

For one pound of air then,

$$H = S_v\ T_2 \left(1 - \left(\frac{p_o}{p_1}\right)^{\frac{\gamma-1}{\gamma}}\right).$$

If Q = the weight in pounds of the blast, the expression for the total heat absorbed by the expansion of the blast will be

$$H = Q\ S_v.\ T_2 \left(1 - \left(\frac{p_o}{p_1}\right)^{\frac{\gamma-1}{\gamma}}\right).$$

The determination of the amount of heat required in the hearth of the furnace to restore to the blast its original temperature is of more practical importance than the preceding, as it enters into the calculation of the heat requirements of a furnace. It has never yet, to my knowledge, been introduced as a separate item in such a calculation, but has been, when mentioned at all, included in the item of the indeterminate sources of loss of heat. This amount of heat, which we shall designate by the symbol H′, is composed, as previously pointed out, of the amount required to restore the intrinsic energy of the air increased by the amount converted into work in the dilatation of the air during its reheating.

If we let v_4 = the volume to which the air is dilated when its temperature is increased to T_2 at the constant pressure p_o in the hearth of the furnace, we have

$$H' = I_2 - I_3 + p_o\ (v_4 - v_3).$$

But we have

$$v_3 = v_o\ \frac{T_3}{T_o}\ ,\ \text{and}\ v_4 = v_o\ \frac{T_2}{T_o}\ ,$$

therefore

$$p_o\ (v_4 - v_3) = \frac{p_o\ v_o}{T_o}\ (T_2 - T_3).$$

But we have already found that

$$(T_2 - T_3) = T_2 \left(\frac{T_1 - T_o}{T_1}\right) = T_2 \left(1 - \left(\frac{p_o}{p_1}\right)^{\frac{\gamma-1}{\gamma}}\right).$$

Substituting this value of $(T_2 - T_3)$ in the preceding equation, we obtain

$$p_o\ (v_4 - v_3) = \frac{p_o v_o}{T_o}\ T_2 \left(1 - \left(\frac{p_o}{p_1}\right)^{\frac{\gamma-1}{\gamma}}\right).$$

Substituting this value of $p_o (v_4 - v_3)$ in the expression for H′, together with the value previously obtained for $I_2 - I_3$, we get

$$H' = \frac{p_o v_o}{T_o} \frac{1}{\gamma - 1} T_2 \left(1 - \left(\frac{p_o}{p_1}\right)^{\frac{\gamma-1}{\gamma}}\right) + \frac{p_o v_o}{T_o} T_2 \left(1 - \left(\frac{p_o}{p_1}\right)^{\frac{\gamma-1}{\gamma}}\right) \cdot \cdot$$

$$\text{or } H' = \frac{p_o v_o}{T_o} \frac{\gamma}{\gamma - 1} T_2 \left(1 - \left(\frac{p_o}{p_1}\right)^{\frac{\gamma-1}{\gamma}}\right) .$$

Dividing the expression for H′ by that for H, we obtain for the ratio between them the equation $\frac{H'}{H} = \gamma$, as we had previously determined that it should be.

The numerical value of the constant coefficient in this case for one pound of air, is $C'_m = \frac{p_o v_o}{T_o} \frac{\gamma}{\gamma - 1} = 830.2$ foot pounds per degree Centigrade. From this we can obtain, as before, the expression for this constant coefficient in thermal units.

$$C'_t = \frac{830.2}{1389.6} = 0.238.$$

This is the value of the specific heat of air at constant pressure (S_p).

$$C'_t = S_p .$$

The expression, in thermal units, for the total heat required to restore to the blast in the furnace the temperature which it had before expansion thus becomes

$$H' = Q . S_p . T_2 \left(1 - \left(\frac{p_o}{p_1}\right)^{\frac{\gamma-1}{\gamma}}\right) .$$

It is this expression which should be employed in the calculation of the heat requirements of a furnace. We see from it that the quantity of heat required to restore to the blast the temperature which it had before its expansion is directly proportional to the temperature of the hot-blast (T_2) and to the quantity $\left(1 - \left(\frac{p_o}{p_1}\right)^{\frac{\gamma-1}{\gamma}}\right)$. The higher the temperature of the hot-blast (T_2) and the higher the pressure of the blast (p_1) the greater is this loss of heat. We will illustrate this by a few numerical examples. To avoid high figures we will follow the general custom and adopt the ton as our unit of weight. Our thermal unit will be consequently changed to the ton-Centigrade heat unit.

1st. Let us take the case of a charcoal furnace working with cold-blast at a pressure of $1\frac{1}{2}$ lbs. per square inch and burning one ton of carbon at the tuyeres per ton of pig iron produced.

In this case

$$Q = \tfrac{4}{3} \times 4.33 = 5.77 \text{ tons of blast per ton of pig iron.}$$

$$\left(1 - \left(\frac{p_o}{p_1}\right)^{\frac{\gamma-1}{\gamma}}\right) = \left(1 - \left(\frac{14.7}{16.2}\right)^{0.29}\right) = 0.0278.$$

$$T_2 = T_1.$$

$$T_1 = \left(\frac{16.2}{14.7}\right)^{0.29} \times 273° = 280.8°.$$

$$(T_1 - T_o) = 7.8°.$$

$$H' = 5.77 \text{ tons} \times 0.238 \times 280.3° \times 0.0278$$

$$= 5.77 \text{ tons} \times 0.238 \times 7.8° = 10.7 \text{ ton-Centigrade heat units per ton of pig iron.}$$

2d. In the example (A), given by Mr. Bell in his work on the *Chemical Phenomena of Iron Smelting* (Section XXVIII), of a furnace having a capacity of 11,500 cubic feet, and smelting Cleveland ironstone,

$$Q = 5.187 \text{ tons of blast per ton of pig iron.}$$

$$t_2 = 485° \text{ C.}$$

$$T_2 = 273° + 485° = 758°.$$

The pressure of the blast is not stated, but is assumed to be four pounds per square inch.

Upon this assumption,

$$\left(1 - \left(\frac{p_o}{p_1}\right)^{\frac{\gamma-1}{\gamma}}\right) = \left(1 - \left(\frac{14.7}{18.7}\right)^{0.29}\right) = 0.0674.$$

$$T_1 = \left(\frac{18.7}{14.7}\right)^{0.29} \times 273° = 292.7°.$$

$$(T_1 - T_o) = 19.7°.$$

$$(T_2 - T_1) = \frac{T_2}{T_1}(T_1 - T_o) = 2.59 \times 19.7° = 51°.$$

$$H' = 5.187 \text{ tons} \times 0.238 \times 758° \times 0.0674$$

$$= 5.187 \text{ tons} \times 0.238 \times 51° = 63 \text{ ton-Centigrade heat units per ton of pig iron produced.}$$

This is equivalent to 1260 cwt.-Centigrade heat units, which are the units Mr. Bell employs in his calculations.

3d. In the Cedar Point furnace, working with anthracite and with blast heated in Whitwell stoves, the calculation of the heat requirements of which is given by Mr. Witherbee in the Transactions of this Institute (vol. v, p. 618),

$Q = 5.481$ tons of blast per ton of pig iron.

$t_2 = 704°$ C.

$T_2 = 273° + 704° = 977°$.

The pressure of the blast is not stated but is assumed to be about $7\frac{1}{2}$ lbs. per square inch.

In this case

$$\left(1 - \left(\frac{p_o}{p_1}\right)^{\frac{\gamma-1}{\gamma}}\right) = \left(1 - \left(\frac{14.7}{22.05}\right)^{0.29}\right) = 0.1109,$$

$$T_1 = \left(\frac{22.05}{14.7}\right)^{0.29} \times 273° = 307°.$$

$$(T_1 - T_o) = 34°.$$

$$(T_2 - T_3) = \frac{T_2}{T_1}(T_1 - T_o) = 3.4 \times 34° = 108°.$$

$H' = 5.481$ tons $\times 0.238 \times 977° \times 0.1109$

$= 5.481$ tons $\times 0.238 \times 108° = 140.8$ ton-Centigrade heat units absorbed per ton of pig iron produced.

In this last case the amount of heat absorbed in heating the blast to its original temperature is seen to be considerable, owing to the fact that both the temperature and the pressure of the blast are high. Those who are not familiar with heat calculations may obtain a more definite idea of the extent of this loss of heat by observing the loss in temperature which the blast suffers during its expansion, $(T_2 - T_3)$. This amounts to 108° C. (194° F.) in the case in question, so that, while the temperature of the blast as recorded after leaving the hot-blast oven is 704° C., its temperature after its expansion is less than 600° C.

It must be remembered, that these results are exact only upon the assumptions which we have made, viz.:

1st. That the back pressure in the furnace is equal to that of the external atmosphere.

2d. That the blast is first cooled to the full extent by its expansion, before its temperature is again raised by the heat in the furnace.

3d. That the pressure at the tuyeres is equal to that in the receiver.

Since there is always an excess of pressure above that of the atmosphere in the hearth of a furnace while it is in blast, the amount of heat actually abstracted from the hearth to restore to the blast its original temperature will be less than the amount which would be obtained by calculation from the formula given above. The gases produced in the hearth, however, as they rise through the furnace are subjected to a constantly diminishing pressure which finally, at the throat, differs very slightly from that of the external atmosphere. In consequence of this diminution of pressure the gases expand, and in so doing absorb a certain quantity of heat. This loss of pressure from the hearth to the throat is, however, small, so that, although the nature of the gas and the law of expansion are different from those to which our formula applies, still we would not commit an error of importance if we assumed that the amount of heat required to restore that lost in the expansion of the gases in the furnace is equal to the difference between the result obtained by our formula and the amount of heat actually abstracted from the hearth. The total heat requirement of the furnace due to the expansion both of the blast and of the gases would thus be nearly equal to that obtained by our formula, but it must be remembered that of this total heat requirement a portion only, although much the larger portion, that namely, due to the expansion of the blast, is abstracted directly from the hearth, the remainder, or that due to the expansion of the gases, being absorbed throughout the whole of the furnace above the hearth.

With regard to the second assumption, if the blast be not cooled to the full extent at first, but receive heat from the furnace with sufficient rapidity to prevent the full diminution of its temperature which would otherwise result from its expansion, the amount of heat absorbed by it, to restore or maintain its original temperature, would be greater than that obtained by our formula, since the amount of heat converted into work would be greater. If this assumption is not correct, however, I think it likely to be so nearly accurate that the error involved in its adoption must be slight.

The error introduced by the third assumption may readily be avoided by giving to p' in the formula the value of the pressure at the tuyeres, which may be obtained directly by experiment, or by deducting from the pressure, recorded at the receiver, the mean loss of pressure from receiver to tuyeres, which has been determined by previous experiments. In this way the small loss of heat, due to the expansion of the blast from its pressure at the point where its

temperature is observed to that at the tuyeres, will be neglected, but as the difference of pressure is very slight, the loss thus neglected will be inconsiderable.

It appears from the above, that the results obtained by the formula which we have deduced, while they cannot claim absolute accuracy, are sufficiently close approximations for ordinary purposes, and the errors in them are probably quite within the limits of error admissible in such calculations as that of the heat requirements of a blast furnace.

THE EUREKA LODE, OF EUREKA, EASTERN NEVADA.

BY W. S. KEYES, SAN FRANCISCO, CALIFORNIA.

(Read at the Amenia Meeting, October, 1877.)

EASTERN NEVADA.

THE State of Nevada, known *par excellence* as "the Silver State," occupies the major portion of the wide plateau, or so-called Great Basin, lying between the Sierra Nevada range on the west and the Wahsatch range of the Rocky Mountains on the east. It extends from the 114th degree to the 120th degree of longitude, west of Greenwich. It is limited, on the north, by the 42d degree of latitude, and on the extreme south by the 35th degree of latitude. Its general shape is that of an irregular parallelogram, from which the lower or southwestern portion has been cut off by a diagonal southeasterly line; the missing portion forms a part of the State of California on the west.

The Great Basin is made up of a succession of low hills, or minor mountain ranges, running very nearly north and south, with long valleys between them. All of these mountains are more or less metalliferous. On the western rim, marking the eastern flank or foothills of the Sierra, we find granites, porphyries, and propylites. Here we note the great Comstock lode, with its free-milling gold and silver ores, and still further south the once prominent and the now reviving gold and silver-bearing districts of Esmeralda County, Nevada, and of Morro County, California. Next, at some distance to the east, we find the mining districts at and near Unionville, in Humboldt County. Still further to the east we find the Battle Mountain copper-silver district, north from the railroad, and southerly therefrom the Austin or Reese River, Belmont, and other districts. Still further east and north of the railroad, we find the Tuscarora, a new district of very

great promise, and the Cornucopia district; and south of these the Cortez, Eureka, Morey, and Danville districts. Eastward again lie the Cherry Creek, White Pine, Sacramento, Patterson, Bristol, and Pioche districts, and, most easterly of all, the Deep Creek and other purely lead-bearing districts, which assimilate most nearly to the smelting-ore mines of the Territory of Utah.

Very nearly in the middle of Eastern Nevada, we find a belt of carboniferous strata, commencing in the vicinity of the town of Carlin, on the line of the Central Pacific Railroad, passing southwardly about 25 miles east of the town of Eureka, and reappearing a little west of south at a point from 100 to 150 miles east of the town of Darwin, in the State of California. The coal seams of this belt are, in its northern part, thin, and rendered very impure by a large proportion of intercalated black bituminous shales, so that, up to the present time, they have proved of slight commercial importance. Those farther south, on the other hand, are reported to be large, and may, possibly, in the future, become available for the use of railroads and smelting works.

The western portion of the State carries, predominantly, "free-milling" ores, or such as readily yield the precious metals by simple amalgamation. The eastern portion, however, with the exception of the Tuscarora, Cornucopia, Cherry Creek, Pioche, and some minor districts, carries in the main, the lead or smelting ores.

Eastern Nevada is made up almost entirely of a succession of irregularly connected low mountain ranges, running northerly and southerly, which are due to the elevation of the beds of dolomitic or mountain limestone, with intercalated strata of sandstones, quartzites, and calcareous and argillaceous shales. The valleys between the ranges are filled mainly with the products of erosion, and have an average altitude of between 4000 and 6000 feet above the sea-level. The primal granites are visible at a few places, as, for example, in Steptoe Valley, where they show gold quartz veins, and, father south, on or near the same parallel, while the intrusive rocks, porphyries, and lavas, with the accompanying trachytic tufas, are found almost invariably in the vicinity of the metal-bearing districts. The limestones have been determined as belonging to the paleozoic series of rocks of the Cambrian, Silurian, and Devonian eras, and the explorations on the fortieth parallel, under the direction of Mr. Clarence King, have shown their maximum thickness to exceed 30,000 feet. The uplifting of these strata has given rise to the north and south mountain ranges, and hence we observe the anticlinal folds, dipping,

in the main, easterly and westerly. This portion of the State is measurably well watered. We find bodies of water, nearly large enough to be denominated lakes, in Deep Creek, Spring Valley, Steptoe Valley, and Ruby Valley, and smaller creeks or streams are not uncommon in all the other depressions between the ranges. The climate is highly salubrious. The snowfall, except upon the mountain tops, is comparatively insignificant. Most of the hardier vegetables and cereals are cultivated with ease and profit. Cattle raising and sheep farming are, aside from mining, the chief industries, for which the bunch grass and white sage offer an admirable and plenteous pasturage. The mountain mahogany, as it is called, a species of iron-wood, and the piñon, or nut-pine, are found in sufficient abundance for the purposes of fuel. The rainfall is, as a rule, slight, but, according to the observation of the longest residents, it has annually been increasing. In fact it has been remarked by the Indians that the white man brings his climate with him, that is, that it rains now more than formerly. In proof we have the fact that Walker's Lake, near the Sierra, has, in recent years, so much enlarged its area that the old stage road is now under water four or five miles from the shore, and at Rush Lake, near the town of Stockton, in Utah, where, in 1866, there was merely a muddy slough, we now find a respectable lake several miles in length. The Great Salt Lake, as is well known, is much less strongly impregnated with salt than formerly, and has risen from twelve to fourteen feet.

Population in the Great Basin is quite scanty. The entire State of Nevada has only about 54,000 inhabitants, of whom the far larger portion are to be found near Virginia City, on its western limits. Eastern Nevada is very sparsely settled, the population being principally confined to the neighborhood of the mining villages, which now are, as they always have been, the forerunners of advancing civilization.

EUREKA.

The town of Eureka is situated in the county of Eureka, in the eastern part of the State, ninety-one miles south of Palisade Station, on the Central Pacific Railroad, with which it is connected by a narrow-gauge railroad. This road was built and equipped without aid either from the State or county. It has nowhere a grade of over one hundred feet to the mile, and is reported to have cost something more than $1,000,000.

Eureka, which, in the year 1869, had but one or two log cabins,

has now a population of 5000 to 6000, with two daily newspapers, two lines of telegraph, a railroad, and many fine buildings. It is the second town of importance in Nevada. The territory now known as Eureka County was formerly a portion of Lander, the "Mother of Counties." Lander was, in the year 1869, as a consequence of the White Pine excitement, divided into three portions; the northeast portion was organized as Elko County, and the southeast portion as White Pine County. The legislature of 1874 again cut off from Lander a narrow strip, running north and south, and formed thereof the present county of Eureka.

HISTORY OF THE EUREKA DISTRICT.

The Eureka mining district embraces the major portion of a spur of the Diamond range of mountains. (See Map, Plate VII.) Silver ore was first discovered in this locality by some members of the Leathers' party from Austin, on their way to White Pine, in the latter part of the year 1864, or early in 1865. They had intended to follow the old road, through the pass across the Diamond Range, some three miles north of the present location of the town of Eureka, but some of the laggards of the company, deeming the cañon leading to the south the easier passage, took that direction, and found some rich mineral "float" in what is now called New York Cañon, just south of the present town. They hastily made some locations, and continued their journey to White Pine Mountain.

Little was done in the district, beyond merely adopting the Reese River mining rules and regulations, until the spring of 1869, when Major W. W. McCoy built, under the direction of Mr. C. Stetefeldt, M. E., a small furnace for the reduction of ores. This furnace was only moderately successful. The ores were very "rebellious," *i. e.*, contained a very high percentage of silica, and although some "work-lead," or bullion, was produced, still the experiment was, on the whole, non-remunerative. Meanwhile the Tannahill Company, an Eastern corporation, had done a little work, but was ultimately dissolved, or ceased operations. In the fall of 1869, Mr. G. C. Robbins, as agent for the Buttercup Company, likewise an Eastern corporation, built a small "craft furnace," which was partially successful, and subsequently a larger furnace. Owing to economical complications, this company's property was ultimately sold out by the sheriff, and it, too, disappeared. The Jackson Company also built, subsequently, a small furnace, and produced some lead bullion.

All the locations made in the district up to the summer of 1869, were in New York Cañon and on the easterly flank of the high peak now known as Prospect Mountain. All the prospectors had sought for mineral on the east side, and had unfortunately overlooked the westerly and northwesterly foothills. At this time, however, some Cornish miners discovered a very promising ferruginous outcrop about 2½ miles west of the town of Eureka, on a northwesterly spur of Prospect Mountain, which they named Ruby Hill. From this discovery dates the beginning of the prominence and prosperity of the district.

The party located the Champion, Buckeye, Sentinel, Mammoth, and other claims, which they set to work industriously to open and develop. The owners of the Buckeye, Mammoth, Sentinel, etc., built a brush fence marking and defining their claims. They prudently took in all the law allowed them, and something more; and, subsequently, when the ground had become valuable, patrolled their boundary line with loaded rifles to keep off encroaching locators.

Soon after Messrs. Buel & Bateman, men of affairs and adventurous miners, built two small furnaces after the Cornish fashion to smelt the rich carbonate of lead ores found in the Champion. The results were highly encouraging. Subsequently a party of San Francisco capitalists bought out the owners of the Buckeye, Mammoth, Sentinel, etc., and a consolidation was effected with the Buel & Bateman Company. From the properties thus united resulted the corporation now known as the Eureka Consolidated Mining Company. This company was organized in July, 1870, and in the month of January of the succeeding year the writer took charge as superintendent of the mines and furnaces. During the next few years a large number of corporations were formed to work the mines of this district, among others the Richmond, K. K., Jackson, Phœnix, Hamburg, etc. All of these except the last (and that presumably) are situated upon what we shall call the Eureka lode. Of these the Richmond lies to the west of the Eureka Consolidated, and the K. K., Phœnix, and Jackson, in the order named, follow one another to the east of the Eureka. The Hamburg lies about three miles in a southerly direction, and is probably on a continuation of the same great lode. Quite a number of more or less promising locations have been made on both sides of Prospect Mountain. They have not, however, been developed to any great extent.

A work of very great geological interest is the tunnel recently started on the western side of Prospect Mountain. This is intended

to be driven from the west entirely through the hill. At a point some few hundred feet in it is reported that the limestone has given place to quartzite. If this is true it seems likely, judging from other parts of the district, that ore will be found lying upon either the western or at all events on the eastern side of it.

MINING LAWS.

The rules and regulations of the miners primarily in force in the district were such as usually governed throughout the State. The early locators adopted formally the Reese River code of laws, which granted 200 feet along the course of the lode to each person named in the notice of location, with an extra claim as a bonus to the discoverer of a new ledge. This code allowed also a space of 100 feet on each side of the claim for working purposes, *i. e.*, for hoisting works, dump room, and other appurtenances of the mine. In the year 1869, at the suggestion of Mr. Stetefeldt, an amendment or addition to the laws was made, whereby "square" locations, as they were called, might be taken up. These square locations consisted of a space of ground 100 by 100 feet, with the addition of the usual extra "square" for the discoverer of a new deposit. They were surface locations, pure and simple, and granted all the mineral which lay beneath them to any depth. The reason recited as the motive for this amendment was that the ores of the district did not occur in true veins, but merely in the form of isolated irregular deposits. These new regulations were adopted prior to the discovery of the ore on Ruby Hill, and hence it is proper to assume that they were not predicated upon the mode of its occurrence at this particular locality. Nevertheless all the earliest locations on Ruby Hill were made either as surface "squares" or as both "squares" and ledge locations. As examples of the latter we have the Richmond location, made by the predecessors in interest of the present Richmond Mining Company, and the Marcelina, belonging to the K. K., which was located in a similar manner by the predecessors in interest of that company. In the fall of 1869 and early in 1870, the miners seem to have begun to doubt the validity of the square locations, and without exception relocated their claims as ledges.

Eureka thus appears to have been the first, if not the only district in the State, in which such a method of location has been attempted. It is still a matter of grave doubt whether such a location could or could not be deemed to come within the meaning of any of the United

States enactments governing the location of mines, after the promulgation of the law of 1866. At any rate the innovation very soon fell into disuse, or was only invoked as an additional safeguard to round out, so to speak, a ledge location. By combining both a surface claim and a ledge location the miners were enabled to evade the very troublesome and very improper permission or presumption of the old law that many different ledges might crop out and be held by different owners within the area of a single claim. This objectionable feature has been entirely obviated by the wise provision of the act of 1872, whereby all ledges, if there be more than one within the surface lines of the original location, are deemed to be the property of the first locator, in so far as they are included within the projected end-lines of the claim. The law of 1872 has so far worked admirably in practice. It might be improved, however, by enlarging the surface permitted from 600 to 1000 feet, and by making the parallelism of the end-lines mandatory instead of merely directory.

GENERAL GEOLOGY OF THE DISTRICT.

Immediately east of the long and narrow gulch, in which lies the town of Eureka, we find some high lava hills, which extend, interrupted by valleys, very nearly to White Pine, forty miles distant to the southeast. Bordering on the lava hills, and extending also west of the town a few hundred yards, are trachytic tufas of whitish or pinkish color. These rocks, probably volcanic ash, are used for building material. When freshly quarried they may be easily shaped with an axe; but, on exposure, they lose much water, and become quite hard. The tufas extend southerly along the main gulch about one mile. South of the town we note also other gulches; the most westerly, called Goodwin Cañon, skirts along Prospect Mountain; the next, called New York Cañon, runs more or less parallel with the main gulch, and ends in a species of basin against a portion of Prospect Mountain; the next to the east follows along southerly, and, crossing a low divide, forms the highway to Secret Cañon District. The main gulch receives some minor tributaries from the east, and passes on to Fish Creek Valley. At the point first mentioned, south of the town, where the tufas give out, occurs a prominent ledge of sandstone, from which rock has been taken for lining the smelting furnaces. This sandstone reef is largely developed on the eastern side of the Diamond Range, facing Newark Valley, and appears again some fifteen miles to the east, as a part of the coal

measures at Pancake. It is hence called Pancake Rock. The mechanical aggregation of its quartzy particles varies very much. In some specimens the sandstone is distinctly granular; in others it appears compact, tough, and close-grained. Only the former variety is used for the furnaces; and when so used it must be built in with the edges of the bedding exposed to the fire; otherwise it shales off in large flakes. I have found but one fossil in the Eureka reefs. This appeared like a short section of a small wood-screw, about three inches long, and nearly half an inch thick. The fossil was surrounded by a hollow cylindrical space, leaving the articulations free, the extreme ends of which formed part of the inclosing rock. The specimen has unfortunately been lost. In New York Cañon we find a series of true clay shales, which furnish the tamping for the furnaces. On the western side of the same gulch we find a high ridge of calcareo-silicious rock, called Silver Hill. This last contains some specimens of ore, and has been located for mining purposes. In places it has yielded some very rich ore carrying chloro-bromide of silver. No well-marked deposit has, however, as yet been uncovered. A similar ore in similar rock has also been found on and near Adams Hill, about three miles west from the town.

Adjoining the town, a little south of west, are two hills of trachytic tufas, and again west of these an isolated hill of massive quartz or quartzite, called Caribou Hill. In places this hill shows some very rich specimens of chloro-bromide of silver, but not as yet in any great quantity.

Due south of the town and west of the main gulch, not delineated upon the map, is a high mountain of massive quartz or quartzite, whereon are situated the Hoosac and other mines. The Hoosac has yielded large quantities of antimoniacal lead ores, some of which were very rich in silver, but carried no gold.

In this respect they, in common with the ores found in the silicious lime ridges, differ from the lead-bearing ores of the dolomitic limestone, all of which latter carry more or less gold.

Southwest of Caribou Hill we come to Ajax Hill and Ruby Hill. The former is merely an easterly continuation of the latter. The quartzites and silicified limestones extend in a northerly and southerly direction from Adams Hill on the north to and beyond the Hoosac Mine on the south. A heavy line of calcareous shales is found, more or less continuously, between the same points. They seem to bear some fixed relationship to the quartzites, and are probably the remnants of conformably deposited beds. Back of Ruby Hill, to the

south, the high peak of Prospect Mountain towers about 2000 feet above the valley. It consists superficially of limestone, and has, on both flanks, many outcrops of ore which seem to occupy a succession of gash veins. The ore is quite distinct from that of Ruby Hill. On the western side of the mountain, the quartzite reappears and extends to the south for several miles in the direction of Spring Valley. Still west again we find the limestones, wherein there are some few mining locations. The limestones extend onward to the west, a distance of about sixty miles, until we approach Smoky Valley, which bounds, on the east, the Toyabe range of mountains, in which are the granite formations of the Reese River and other districts. To the east of Eureka, the same broad belt of dolomitic limestone extends quite to the limits of the Great Basin, and is broken only by the valleys, and by occasional outpourings of the volcanic rocks, and rare appearances of the deep-lying granites.

The Eureka limestones carry Silurian and Devonian trilobites in but two places, as far as known at present. The one is at a point near the northwesterly end of Ruby Hill in the direction of the extreme southerly spur of Adams Hill, and the other is in New York Cañon directly east of the Mortimer Mine, at a point about 2½ miles south of the town. These fossils are all small; the largest being about the size of a finger-nail.

GEOLOGY OF RUBY HILL.

The geology of Ruby Hill is quite simple. To the south we have a belt of quartzite. Just south of the claims of the Eureka Consolidated and Richmond we find the quartzite grooved out, and forming a narrow gulch running down to the valley on the west. Across this small gulch it rises and forms a small bare hill. To the east the quartzite continues along the K. K. and Phœnix claims, and then turns to the southeast, behind the claims of the Jackson, Jefferson, Shoo Fly, etc. Superimposed upon the quartzite we find an altered bed of dolomitic limestone, striking easterly and westerly, and dipping to the north and northeast. This forms the mineralogical zone, treated in this paper as a single lode or vein, whereon are located the Tiptop and Richmond claims, the Eureka Consolidated claims, the K. K., Phœnix, Jackson and other claims. Beyond and geologically above this mineralized zone or vein limestone we find a more or less conformable belt of calcareous and argillaceous shales. Still further to the north and east we find the horizontally lying beds

of country limestone, in which are occasional intercalations of an earthy stratum, apparently marl. The strata of the country limestone vary in thickness from an inch to a foot and over.

THE QUARTZITE.

This forms the footwall of the metal-bearing zone. Its general course through Ruby Hill is very nearly east and west, and its dip is variable, being sometimes nearly vertical, and again quite flat; on the average we may call it about 45° northerly. It seems to have exerted a predominating influence on the deposition and distribution of the ore bodies in the vein limestone. As early as 1864 in Mexico, and subsequently in 1867 in Montana Territory, I observed that the more permanent mines in the dolomitic limestones were always found at or near the points of junction with the quartzites, thus indicating that the latter had some bearing on the ore deposition. This observation has received abundant confirmation from the ore formation and distribution on Ruby Hill, as will appear more fully in the following pages.

After leaving Ruby Hill proper, and just before coming to the Jackson Mine, we find the quartzite gradually curving around to the southeast and south. This change of direction of the footwall gives rise to two anticlinal folds in the vein limestone. The main folding occurs south of the Phœnix, and accords with the general north and south lines of upheaval of the district. The other, or minor folding, occurs on and near Ruby Hill, where the vein limestone on the south side of the hill dips to the south, and that on the north side dips to the north. As a consequence of the variation of strike, we find the quartzite footwall bulging or buckling to the north, and forming great capes, or promontories, which jut out into the vein limestone. On the line of claims heretofore mentioned, we find one very large and two smaller promontories, viz., one at the seventh level of the K. K., where, as will be observed on the map, the footwall drift makes out far to the northeast; another at the extreme westerly end of the fifth level of the Eureka Consolidated, where the footwall turns suddenly to the south; and another, the largest of all, at the ninth level of the Eureka Consolidated, where its thickness is shown by the straight gallery, to be over 200 feet. These capes form wide basins between them, and in these depressions the ore is accumulated. The thickness of the quartzite footwall has not yet been determined. The K. K. has driven into it, at one place, 150 feet; the Eureka drifts have penetrated it from 250 to 300 feet, and the Jackson Com-

pany has explored it by drifts for a distance of nearly 750 feet. The quartzite on the plane of contact with the vein limestone is, almost universally, stained red and black with the oxides of iron and manganese; and where the surface waters have percolated along it, we find it soft, decomposed, and covered with a species of plastic clay "gouge," often several feet in thickness. Where, on the contrary, the dip is steep, say from 80 to 85 degrees, and unexposed to the action of water, we find it hard, and in close contact with the vein limestone. Marks of motion are plainly visible, showing the effects of the sliding of the limestone. Often, as in the Phœnix, we observe the clayey face of the footwall, with a half inch of manganese matted upon it, hard, and polished like ebony, with deep striæ running up and down. Near the contact, and for some distance away from it, we often find the footwall irregularly impregnated with iron pyrites yielding, on assay, small amounts of gold. In but a single instance has this pyrites been found in a mass of any magnitude, viz, near the bottom of the Phœnix shaft, which passed through it for 12 feet. Such contact impregnations, as is well known, are quite common in the wall-rocks of metalliferous veins.

Near the vein limestone, the quartzite is much decomposed. Back from the line of contact it is hard and crystalline; so hard, indeed, that it requires blasting, and shows but faintly the original lines of bedding. At one time, encouraged by traces of gold and silver, the Eureka miners imagined that the quartzite would prove to be a ledge of milling ore. Many feet of drifts were excavated in the hope of finding pay ore, but all to no purpose. The rock was useful as a silicious flux for a temporary overplus of iron in the ore from the vein; and hence the cost of exploration was not wholly lost. Of late years no further attempts have been made to find "pay" in it, particularly as the traces of gold became less, the further the drifts were advanced away from the vein.

THE VEIN LIMESTONE.

During the progress of the recent litigation between the Eureka Consolidated and the Richmond companies, a number of analyses were put in evidence by both parties. We have three by Messrs. Luckhardt & Huhn, of the Nevada Metallurgical Works, and ten by Prof. Price of San Francisco.

Those made by the former gentlemen prove the vein limestone to be, beyond question, a typical dolomite. Pure dolomite, as is well known, is a definite compound of about 46 parts of carbonate of

magnesia, and about 54 parts of carbonate of lime. But it very often happens that limestones present, to a greater or less degree, mechanical admixtures of the carbonate of lime, with dolomite, so that geologists, to avoid ambiguity, make use of the terms magnesian or dolomitic limestone. Dana's *Mineralogy* gives analyses of dolomites carrying as high as 57 per cent. of carbonate of lime, and running as low as 32 per cent. of carbonate of magnesia, with some even as low as 25 per cent. of the latter.

Several of the analyses presented by the Richmond Company showed the rock to be a nearly typical dolomite, and but a single analysis showed it to contain less than 6¼ per cent. of the carbonate of magnesia..

The analyses of the vein limestone made by Messrs. Luckhardt & Huhn are marked Nos. I, II, III, as follows:

	I.	II.	III.
Carbonate of lime, . . .	52.04	64.50	59.28
Carbonate of magnesia, .	43.24	34.20	36.63
Oxide of iron and alumina, .	1.19	0.70	2.70
Silica, ...	1.65	0.12	0.43
Alkaline carbonates and loss,	1.88	0.48	1.01
Totals, . . .	100 00	100.00	100.00

No. I was a sample taken from the main drift of the third level of the K. K. mine, 100 feet northeast of the shaft.

No. II was a sample of brecciated matter taken from the tenth level of the Eureka Consolidated.

No. III was a sample taken for a distance of twenty-five feet along the main drift of the eighth level of the Richmond Mine, commencing at a point about 125 feet northeast from the quartzite footwall of the ledge.

The analyses of the vein limestone made by Prof. Price, marked from No. 4 to 13, both inclusive, are as follows:

No.	Carbonate of lime.	Carbonate of magnesia.	Carbonate of iron.	Alumina.	Silica and Silicate of alumina.	Totals.
4	53.14	44.35	2.32	traces.	0.12	99.93
5	68.20	25.21	3.19	traces.	2.50	99.10
6	79.25	17.38	1.17	traces.	0.71	98.51
7	82.15	14.06	2.32	traces.	0.80	99.33
8	85.32	11.03	0.87	traces.	1.83	99·05
9	69.23	9.82	traces.	19.60	0.25	98.90
10	89.20	7.56	1.59	traces.	1.69	100.04
11	88.32	6.83	2.61	traces.	1.32	99.08
12	89 26	6.74	1.88	traces.	1.13	99.01
13	92.12	1.06	2.17	traces.	4.10	99.45

No. 4 was a sample taken near the ore at the Tiptop incline of the Richmond Mine; No. 5, soft limestone from the second left-hand crosscut from the main Richmond shaft, near the end of the drift on the 800-foot level; No. 6, from the Bell shaft tunnel, 50 feet from the shale towards the shaft; No. 7, from the end of the Bell shaft tunnel; No. 8, hard limestone, taken from the 800-foot level of the Richmond Mine, inside of No. 1 winze; No. 9, from the stratum on which the ore rests at the Tiptop incline of the Richmond Mine; No. 10, from the Bell shaft tunnel, taken a few inches from the line of contact with the shale; No. 11, from the limestone overlying the ore body in the Potts Chamber, between the fifth and sixth levels of the Richmond Mine; No. 12, from several places in the Lizette tunnel, between the Rossiter incline and the Champion "winze up;" No. 13, from a point near the Richmond Boarding-House, on a line of contact with the shales.

We have also another analysis of the limestone, marked No. 14, which was made from a sample taken at a point from the top of Ruby Hill, in a line directly south of the Bell shaft, on the claim of the Eureka Consolidated. This sample was analyzed by Messrs. Luckhardt & Huhn, and was apparently a piece of nearly pure calcspar. It contained carbonate of lime, 93.20; carbonate of magnesia, 1.68; alumina and oxide of iron, 0.60; silica, 2.05; water, 0.12; and alkaline carbonates and loss, 2.35; total, 100.

None of the samples analyzed for the Richmond Company were presented in court. Hence no description of them was attainable, other than the designation of the localities as above given.

No. 13 of the Richmond series was like No. 14 of the Eureka series, very probably a piece of nearly pure calcspar.

From all of these analyses it will be apparent that even the seemingly pure calcspar is more or less magnesian. Also that the vein limestone is but very slightly silicious.

PHYSICAL PECULIARITIES OF THE VEIN LIMESTONE.

The most prominent of the physical appearances of the vein limestone, is an entire absence of stratification, with the single exception of a small space of the surface ground, near the extreme western point on Ajax Hill, near the dividing line between the claims of K. K. and Phœnix companies.

Here the apparently stratified limestone conforms in both strike and dip to the underlying quartzite. In the first level of the Phœnix,

at a point a little farther east, we find some remnants of this stratification. The limestone is, however, highly charged with oxide of iron, is soft and muddy, and crumbles to pieces at a touch. This spot seems to have escaped the general crushing of the strata. On the surface, aside from the ore outcrops, we find the vein limestone often stained red and black with the oxides of iron and manganese; also ribbed and streaked where the carbonate of lime has been dissolved out by the pattering rain-drops charged with free carbonic acid, leaving the carbonate of magnesia in high relief. Below the surface, we observe that the vein limestone has been crushed and shattered in every conceivable direction, sometimes in huge blocks, sometimes roughly crumbled like small fragments of marble, again crushed or disintegrated more finely, like coarsely powdered glass, and still again, as fine as the finest sand. This sandy limestone—by the term sandy, we describe merely its mechanical aggregation—occurs generally over the ore bodies, and rarely on the footwall. When found on the footwall it is accompanied by large boulders of limestone, which appear as if worn and rounded by the action of water.

The fine material frequently gives rise to what the miners term "a run," filling up the slopes, mixing with the ore, and causing the workings to cave in. It has not yet been analyzed, but is, doubtless, the residue of the less soluble portion of the dolomite. In color, it is sometimes nearly white, sometimes ashy, drab, bluish or reddish.

The vein limestone is in many places brecciated and cemented together by calcareous exudations or infiltrations. This re-cementation has frequently been carried to such an extent that the vein matter has lost not only all traces of its original stratification, but appears hard and compact, and rings under the hammer. Stains of iron and manganese, vugs containing low grade ore, and large and small cavities, are found irregularly distributed throughout.

These cavities often form huge natural caverns many feet in extent, both laterally and vertically, the sides and tops of which are covered with glittering stalactites and thick incrustations of acicular crystals of arragonite. In the bottoms of the caves ore is invariably found.

The first discovered of the larger caverns was near the surface, on the southern side of the hill, beneath the original ore-body of the Champion claim. This was from 30 to 40 feet wide, about 20 feet high, and some 60 feet long. It lay almost in a direct line above the latest discovered huge cavern, the largest of all, at the

extreme west end of the ninth level of the Eureka Consolidated. Another large cavern was found about two and a half years ago, above the so-called fifth-level bonanza of the Eureka, the roof of which fell in and crushed through three levels of the mine, killing several miners. A large cavern was also found at the second level of the K. K., and in a line therewith a series of such caverns extended downward to the fifth level, where one could advance in an easterly direction a distance of 150 feet. Recently a large cavern has been discovered in the Jackson Mine, beneath which, as is usual, a large body of ore appears.

These caverns form a marked characteristic of the vein limestone. They are nowhere found outside of the mineralized zone, and are due, beyond question, to the easy solubility of the carbonate of lime in surface water charged with free carbonic acid, coupled with the peculiar accessibility of such waters to the interior of this crushed and broken zone. Aside from the numberless fissurings in the mass of the vein limestone, we find two main systems of fissure planes; one in which the cross fissures run nearly north and south, at right angles to the underlying footwall, and the other more or less nearly parallel therewith. An exception to these two predominating lines of fissures we find at the Lizette tunnel in the Richmond Mine. Here the fissure planes have the appearance of nearly level floors. All these fissure planes are strictly internal, are confined to the mineralized zone, never pass out into the underlying footwall, and never penetrate into the overhanging country rock, and hence, in no respect resemble veins of any kind; they are strictly subordinate, and are merely local phenomena of the vein as a whole.

The most prominent of the cross fissures is to be seen at the second level of the K. K., a little west of the main shaft. It runs from the hanging wall to, or nearly to the underlying quartzite, has upon its sides vertical lines of motion, and reaches above the level a distance of 55 feet. It dips slightly to the east. Ore was found upon it a short distance north of the shaft, and thence was found extending back to the footwall. Here, as elsewhere, under similar conditions, the one has plainly been carried forward from the footwall along the fissure plane, and its position on the footwall cannot, by any stretch of imagination, be justly attributed to the fissure plane itself as a source of supply. At this point, the K. K. second level, ore was found upon the cross-break a distance of nearly 200 feet from the footwall, while the fissure plane extended some 80 or 90 feet farther in the same direction, without any ore or sign

of ore, quite to the hanging wall. All these longer fissure planes, whether forming cross breaks or parallel breaks, seem to have resulted from some natural disturbance in the zone of mineralized limestone, and seem to bear some distinct relationship to the folding, bulging, or slipping of the underlying footwall. Beneath the long cross-break at the K. K. second level, developments have shown a sudden sinking or falling away of the quartzite, which fact readily accounts for the vertical fissuring just above it.

The nearly vertical fissurings in the Richmond Mine, which that company sought to have recognized as a distinct vein, were not vertically the one over the other, but were at each succeeding level, further to the north. The footwall beneath them has, we believe, caused their peculiar formation. As yet, the quartzite beneath the Richmond has been but slightly developed. Enough, however, has been shown by its abrupt change of course at the extreme end of the Eureka fifth level, and by its southerly or abnormal dip at the southerly end of the Richmond sixth level, to warrant the conclusion that these fissurings were due to the change of strike and dip of the quartzite. To account for the floor-like fissurings at the Lizette tunnel, we need only note the fact that this is the end of the hill overlooking the valley, and hence the body of limestone had free scope to push forward or slide upon itself. Such floor-like fissuring could not occur at any other point, for the reason that the vein limestone is everywhere else closely hemmed in by the adjoining formations. These fissure planes all have a marked tendency to approach the quartzite, and wherever they have been followed down to the footwall the ore is found extending upon the footwall, both above and below them, thus again showing that the ore upon them was taken from the footwall. In the vein limestone we occasionally find extravasations of crystallized calcspar. They are, however, small in extent, and of such rarity as hardly to be worthy of mention.

This mineralized zone of limestone varies in width from a few inches up to 450 feet, both distances being measured at a right angle with the underlying quartzite. Its mean width is about 250 feet. The vein has a greater apparent width at the surface near the centre of the Eureka claims, and at the Richmond. This is due to the crowding over of the limestone to the south, above a surface fold of the quartzite, whence has resulted the second southerly-dipping anticlinal, heretofore mentioned. The narrowest portion of the vein is found in the Jackson claim, where the abrupt change in course of

the footwall has so far pushed out the quartzite that nothing but a seam of ore is found between the hanging and the foot wall.

THE CLAY SHALE.

Bounding the vein limestone on the north, and marking the limits of mineralization of the zone, we find a distinct line of calcareous and argillaceous shale. This shale has been uncovered in the deep workings in the Jackson, and both on the surface and in the lower levels of the K. K., Eureka, and Richmond claims. It has been traced in the K. K., on the third and fourth levels, a distance of nearly 200 feet in each; on the tenth level of the Eureka about 200 feet, and for a considerable distance on the seventh and eighth levels of the Richmond.

Its general course, where exposed, after leaving the Jackson, is more or less nearly ten degrees north or south of an east and west line. Its dip is much steeper than the average dip of the quartzite, varying from 80 to 85 degrees. It is plastic, with a slightly greasy look, and in color greenish or yellowish, like a talcose mineral. Although containing iron it is never reddened.

We have three analyses, Nos. XV, XVI, and XVII, of this material, made by Professor Price, as follows:

	XV.	XVI.	XVII.
Carbonate of lime,	66.92	10.29	26.12
Carbonate of magnesia,	1.96	0.75	1.05
Carbonate of iron,	5.82	6.09	17.50
Alumina,	traces	traces	traces
Silica and silicate of alumina,	24.81	82.21	54.50
Totals,	99 51	99.34	99.17

No. XV was a sample taken from the Bell shaft tunnel.

No. XVI was a sample taken at the foot of the seventh level of the Richmond.

No. XVII was a sample taken from the face of the eighth level of the Richmond.

Judging from these analyses, the shale is simply an argillaceous material, more or less mixed with carbonate of lime. The shale at the Bell shaft tunnel is within a very few feet of the surface, and seems to carry much less silicate of alumina than samples taken from the Richmond, at points 700 and 800 feet beneath the surface. The percentages of clay are, however, amply sufficient to identify all three samples, and to distinguish them from the vein limestone.

EXTERIOR LIMESTONE.

Beyond the line of clay shale to the north, we find a second body of dolomitic limestone, which forms the hanging wall country. This is distinguishable from the vein limestone from the fact that it contains no ore, no caverns, and no ore stains or oxide of iron, except at two isolated minor localities. Near the surface it is apparently unstratified, or shows very faint signs of stratification. Beneath the surface, on the contrary, it is generally very plainly stratified, and has its lines of bedding resting upon and dipping slightly towards the clay shale.

The stratified country limestone can be seen to the best advantage at the Jackson mines. This company's new main shaft was located at a point several hundred feet north of the quartzite outcrop, and was sunk a distance of 460 feet, all the way through distinctly stratified country rock. At the depths of 300 and 460 feet, levels were driven off to tap the vein. Both of them passed through the stratified limestone, cut the clay shale hanging wall, and passed into the metamorphosed unstratified vein limestone, through which they advanced to the quartzite footwall.

We have three analyses of this material, by Messrs. Luckhardt & Huhn, marked Nos. XVIII, XIX, and XX, which prove it to be a typical dolomite, as follows:

	XVIII.	XIX.	XX.
Carbonate of lime,	52.01	54.34	54.76
Carbonate of magnesia,	43.88	43.49	89.66
Alumina and oxide of iron,	1.13	0.37	1.74
Silica,	0.50	1.79	1.00
Water,	0.09		0.12
Alkaline carbonates and loss,	2.39	0.01	2.72
	100.00	100.00	100.00

No. XVIII was taken 30 feet north of the clay shale, in the Bell shaft tunnel.

No. XIX from a point 120 feet north of the clay shale, in front of the Bell shaft tunnel.

No. XX in the third level of the K. K., on the main drift easterly from the shaft, from a point about six inches to the north of the clay shale hanging wall.

We have also some analyses made by Prof. Price, marked Nos. 21 to 27, both inclusive, as follows:

No.	Carbonate of lime.	Carbonate of magnesia.	Carbonate of iron.	Alumina.	Silica and Silicate of alumina.	Totals.
21	58.24	37.80	1.32	1.02	0.63	99.01
22	68.23	27.46	2.32	traces.	0 92	98.93
23	52.92	32.48	3.62	traces.	10.15	99.17
24	88.34	4.98	1.59	traces.	4.83	99.74
25	91.61	1.21	1.59	traces.	4.73	99.14
26	88.21	1.36	2.32	traces.	6.12	98.01
27	92.60	2.95	0.87	traces.	1 62	98.01

No. 21, was taken on the northern side of the hill, very near the mouth of the Bell shaft tunnel; No. 22, from inside the Bell shaft tunnel; No. 23, from a small shaft between the Bell shaft and the main Richmond shaft; No. 24, a sample of the stratified limestone taken from a point twenty feet from the end of the seventh level of the Richmond Mine. No. 25, was a sample of the stratified limestone taken from a point on the eighth level of the Richmond Mine near the line of contact with the shale; No. 26, from a point near the Richmond Boarding-House, on the northwesterly side of the hill; No. 27, from a point on the southwesterly spur of Adam's Hill, to the north of and opposite to the Richmond Boarding-House.

The specimens from which these analyses were made, were not shown in court, and hence no description is obtainable beyond the mention of the localities. It will be observed, however, that the analyses Nos. 21, 22, 23, from samples taken from the Bell shaft tunnel and its vicinity, correspond satisfactorily with the results obtained by Messrs. Luckhardt and Huhn. These still further confirm the statement that the rock is very nearly a typical dolomite. Every sample, without exception, proves the country rock to be more or less magnesian.

MICROSCOPICAL ANALYSIS.

In order more definitely to investigate the interior or vein limestone, and the exterior or country limestone, specimens of each were ground down to a thin film and carefully examined. The samples thus selected were portions of the same pieces from which analyses Nos. 2 and 19 were made by Messrs. Luckhardt & Huhn. The former is a characteristic sample of the vein limestone, and the latter

of the country limestone. Examined under the microscope, the exterior limestone appeared homogeneous, while the vein limestone, on the contrary, showed an entirely different mechanical aggregation of the particles. The different particles seem to be cemented together with a pasty substance in a manner unlike those of the country rock.

Beyond the exterior or country limestone, we find a comparatively broad belt of highly tilted calcareous shales, which have been heretofore mentioned in describing the general geology of the district.

MAP AND MODEL.

To the better explanation of the vein phenomena and workings, a complete map and a model of glass were made by Mr. T. J. Read, C. E., and presented in court. The map (Plate VIII) shows on a horizontal projection nearly all the superficial and deep-lying ore bodies, as well as all the main shafts, tunnels, drifts, winzes, and connections of the K. K., Eureka Consolidated, and Richmond mines. The foot and hanging walls, wherever developed, are shown upon it. Each of the levels is designated by appropriate numbers and letters; and the ore chambers are so marked as to correspond with the respective levels whereon they are found. Low grade ore, and ore stains, *i. e.*, oxide of iron, carrying traces of lead, gold, and silver, are indicated by shading on each side of the levels and winzes. The workings of the Phœnix and Jackson claims are not delineated upon the map.

The model shows the principal ore bodies in the vein as they appear beneath the surface, looking through the hill from the east, or from the west. (Stereoscopic views of this model were exhibited at the meeting.) The model consists of sixteen glass plates set vertically one inch apart, and is constructed on a scale of 100 feet to the inch. Nos. I, II, III, IV, and V, represent vertical sections, through the Richmond Mine; No. VI represents a section through the end-lines of the adjoining patents of the Eureka and Richmond claims. The remaining plates represent sections through the Eureka Mine.

The ore bodies, placed upon the model, show, from actual survey, the spaces from which mineral was extracted and worked in the furnaces. Around and particularly beneath nearly all of them, large masses of ore are still left standing, which are of too low a grade to be worked at present. Two very prominent, and at one time very rich ore chambers, to the south of or below the surface

chamber of the Champion, are not delineated either upon the map or model. This was owing to the fact that a survey was impossible because they were long since worked out, and have caved and been filled up. Also, quite a large number of the smaller isolated ore bodies were left off, either because they came between the plates or because on the scale of 100 feet to the inch they would have to be represented by small dots. The contour of the surface, it will be observed, is represented by waving lines, and the places of the hanging and foot walls by inclined lines on the north and south.

With a few explanations the map will be fully intelligible. At the lower southwesterly portion we find the Tip Top, Richmond, and Lookout claims patented to the Richmond Company. In the centre we find the Nuget, Champion, At Last Margaret or Lupita, Savage, Buckeye, Mammoth, Sentinel, and Elliptic, belonging to the Eureka Consolidated. All of them have been patented except the last.

The original workings of the Richmond were at the Richmond Tiptop incline, whence they followed down on a series of more or less closely connecting ore bodies to and beneath the point marked "Potts Chamber, fifth level." Here, it will be observed, the shoot of ore has passed laterally across the dividing line of the claims extended on the dip of the lode, and has come into the ground of the Eureka Consolidated. The present main working shaft of the Richmond is marked "Richmond Shaft." It is situated on the northerly slope of the hill, about 200 feet below the comb of the ridge, which passes along easterly and southeasterly through the Lookout claim, at about the At Last Margaret dividing line. From this shaft seven levels have been run out both easterly and westerly. The deposit is 900 feet from the surface.

The mines of the Eureka Consolidated were, like those of the Richmond, originally worked from the southerly slope of the hill. The Eureka workings were at the Champion and Buckeye, and on the northeasterly slope at the surface ore chamber of the Sentinel. The old shafts marked upon the map are the Windsail and Buckeye; the former is about 250 feet deep, and the latter about 150 feet. Both of these reached the quartzite. Three levels were run off from the Windsail shaft, and one from the Buckeye. Besides these, there were quite a number of small shafts and inclines sunk on or near the footwall on the Nuget, Champion, Savage, and Buckeye, which are not delineated on the map. The Bell shaft, on the northern side of the hill, was sunk a short distance and then abandoned. The present main working shaft of the Eureka is at the point marked "Lawton

Shaft," on the extreme easterly line of the Elliptic. From this shaft nine levels have been driven, the deepest being 730 feet from the surface. An inner level, not directly connecting with the shaft, has been run from the bottom of the 100-foot winze at the point 9 V on the ninth level. The first level of the Eureka is called the Lawton Tunnel. It connects with the main shaft by a short side drift. This tunnel starts in the narrow ravine below or to the east of the K. K. hoisting works, and runs entirely through the hill in a southwesterly direction. It passes within a few feet of the Buckeye shaft, connects with it, and also with several of the old ore stopes on the southern side of the hill.

The K. K. has four minor shafts, and one main working shaft on the ground, delineated upon the map. The main shaft is at the point marked "K. K. Shaft." From it, seven levels have been run out, the deepest being 725 feet below the surface.

The Richmond shaft enters the footwall, between its sixth and seventh levels, at a point about 650 feet below the surface. The Eureka shaft enters the footwall, between its sixth and seventh levels, at a point about 450 feet below the surface. The K. K. shaft enters the footwall, between its fifth and sixth levels, at a point about 550 feet below the surface. The collar of the Richmond shaft is 170 feet, and that of the K. K. shaft 58 feet below the collar of the Eureka shaft.

It will hence be observed that the K. K. shaft, lying only 120 feet east of the Lawton, enters the footwall at a point 158 feet deeper than the latter. This statement, showing a sudden falling away of quartzite, will render clear the explanation as to the K. K. second level cross-break, heretofore alluded to.

The numbers on the map indicate points referred to in the evidence during the recent lawsuit. Where a number is followed by a letter, the former indicates the level. Thus, 8 H is the point H on the eighth level. Heavy marking of the sides of the levels indicates ore or "orey matter," according to Mr. Read's testimony in court.

ORES AND ORE BODIES.

All the ores of the Eureka lode are of one general character. They consist, in the main, of highly ferruginous carbonates of lead. Subordinately, we find oxide of lead, arsenio-chloride of lead, molybdate of lead, sulphate of lead, arseniate and carbonate of iron, oxide of zinc, galena, iron pyrites, and rarely oxides and carbonates of copper. They are, in a word, chiefly oxidized ores, the product of the decom-

position of galena and of iron arsenical pyrites, all carrying a greater or less percentage of gold and silver. The workable ore ranges in value from $40 to $70, and upward, in gold and silver, with from 16 to 30 per cent. of lead to the ton of 2000 pounds. The richest ore is that species of carbonate of lead called by the miners "black carbonate."

This ore carries 60 to 70 per cent. of lead, and assays in gold and silver from $100 to $300 per ton. It occurs most commonly in streaks and masses on or near the footwall.

At the K. K. third level, we find a huge mass of nearly pure quartz ore carrying scarcely a trace of lead. This occurrence is entirely unusual in the mines of Ruby Hill. This ore is quite rich in gold and silver, yielding by assay, from $25 to $175 per ton. It lies nearly midway in the ore channel, extends above the level about 25 feet, and below it a distance of about 45 feet; the cross drift shows its width to be nearly 90 feet. Its length has not yet been definitely developed. Over it was found a rich streak of carbonate of lead, which dipped down behind it to the footwall. The quartz is not hard and compact, but has a sugary texture, as if deposited from water. It lies directly beneath the narrow gulch which heads on Prospect Mountain. The only ore ever found on the hill resembling this was a portion of the outcrop at the Buckeye, which was very silicious. The ores in general, as well as the vein limestone, carry very small amounts of silica.

The outcropping of ore on Ruby Hill was originally found on the Champion and Buckeye claims on the south side. It appeared here as an earthy-looking oxide of iron, with which some carbonate of lead and galena were intermingled. This ferruginous matter was found irregularly distributed over a space 480 feet in width, between what is now called the Lupita excavation on the north and the Buckeye on the south. To describe the outcrops in their order, we may begin at the extreme westerly end of the hill. There we find the Richmond Tiptop ore body appearing in a small cave on the side of the hill, and two or three smaller bodies of low grade ore at the shafts further to the northwest. Below them and near the quarzite contact, other bodies of ore were subsequently found.

Between the Tiptop incline and the Champion claim we find, also, a rather prominent outcrop at the Virginia or Iron shaft, and three minor patches of low grade ore at the points marked II, III, and IV on the map. Thence proceeding easterly, we find the large surface chamber of the Champion; then the huge connected outcrop at

the Buckeye; thence nearly due east we find the surface ore chamber of the Sentinel; thence easterly again, in the ground of the K. K., we have the Marcellina outcrop, most unaccountably left off the map; thence, in the same direction, we have the two outcrops at the two small shafts in the gulch; thence a little south of east, and still upon the K. K. claim, we find the Carson outcrop; thence south of east we have the Deap and Phœnix outcrops, and lastly, southeast, we find the Jackson outcrop.

Between the Jackson and the Tiptop we can enumerate a total of thirty-four outcrops, all of considerable extent. Most of them were originally quite small, some, like the Buckeye and Champion, developed to an enormous extent. The extreme points of these claims are over 800 feet apart, as may be seen upon the map, and the ore has been traced almost the entire distance.

When first discovered, the ground between these points appeared to be nothing but limestone, which, however, subsequently proved to be merely cropping of cemented debris.

The largest surface body visible in 1869 and 1870 was the first bonanza of the Jackson. This was an egg-shaped mass of ore, about 70 feet long, 20 feet high, and 30 feet broad. It did not descend to any further depth, and showed no visible connection with any other ore body.

The Tiptop outcrop, as already stated, was found inside a small cave. So little did it attract attention, that the Richmond locators, who had placed their notice, as is reported, at the Iron shaft, very near it, failed to observe it. They took no steps to secure it until ore was found in it by the Tiptop miners. To the latter it properly belonged, but the former party claimed it as being on their location, and after much wrangling the dividing line was fixed at the cave.

None of the Buckeye or Champion surface ore bodies extended to any great depth, for the reason that the quartzite footwall lay close beneath them, to which they, in almost every instance, extended. The exceptions to this well-defined law of the ore bodies were the first surface chamber of the Champion, and some minor stringers near the Buckeye shaft. These ran up the hill to a thin point, and were in shape something like the glass Prince Rupert drops. Beneath both, however, were other large and valuable bodies of ore which dipped down to the footwall.

Pursuing our investigations beneath the surface, we find the main ore bodies either upon or tending directly towards the underlying quartzite. Those which do not obey this law are simply spurs and

branches, making up into the vein limestone. In the K. K., below the third level, all the ore is found immediately upon the contact. On the fifth level we follow the pay ore along the quartzite a distance of nearly 300 feet. The new fourth-level ore body starts in the vein limestone, and as it dips will soon reach the quartzite.

In the Eureka we find the ore along the contact for a distance of 50 to 150 feet. The largest and most valuable shoot of ore ever discovered in this mine is found upon the quartzite at the extreme westerly end of the fifth level. Here the footwall, as already mentioned, makes a sudden bend to the southwest, and upon it is found a thick mass of rich black carbonate, making downward on both sides of the promontory. A portion of this ore continues down on the westerly side of the quartzite cape, passes across the dividing line of the claims, and becomes the property of the Richmond Company. Another and probably larger portion makes its way downward northeasterly along the contact (not, however, with uniform and connected richness), till it expands into a very large body at the ninth level. Here we find a huge cavern at the northwest end, in and beneath which the bonanza attains its greatest development. Beneath the ninth level the ore continues downward, on the line of contact, as far as the workings extend, a distance of 160 feet. At the lowest point a level has been driven east along the quartzite over 200 feet, which carries high grade ore the entire distance.

The Jackson Mine, also, half a mile to the southeast, carries fine black carbonate on the footwall, at the 460-foot level, for a distance of about 200 feet. The ore body underneath the cavern in this mine is not upon the footwall, but its dip is such as will certainly carry it to that point.

The Richmond ore bodies, on a superficial examination as far as the fifth level, would seem to belong to a different system. The outcrop starts in limestone, whence the ore dips down gradually to the bottom of the incline. Here we find the stopes extending northeasterly and quite flatly, to a point a little beyond the northeasterly side line of the Lookout patent. At this point we pass down through the Rossiter Incline, and come to the Flat Chamber, an almost horizontal body of ore. Thence we pass down through steep winzes, through the intermediate levels, until we come to the Potts Chamber. The ore is not continuous throughout the entire distance, but is broken at two places, where the ore-stains are either very scanty or totally absent.

Viewed as a whole, this ore-shoot is made up of a string of ore

bodies following one another irregularly downward and forward to the northeast. The developments have taken this direction rather than a northerly or northwesterly course. Had the latter been pursued, the ore-shoot would very likely have been shown to connect with the ore-bodies at the west of the shaft on the fifth level.

One portion of the Potts Chamber connects with the quartzite. Low grade ore and ore-stains are found upon the footwall, and from thence to the ore stopes only ten feet distant. On the Richmond footwall, at the point 69 B, fine carbonate ore is found.

It will thus be seen that the Richmond series of ore-bodies, like all the rest in the mineralized zone, approach the footwall in depth. Below the Richmond sixth level, in the drift 6 L, low grade ore is found extending southerly, a distance of fully 100 feet. Directly opposite to this drift, at the same depth, we find the Eureka drift, 10 E, advancing to meet it; ore-stains and low grade ore are found in this also. There now remain but a very few feet to connect the two. There is no reason to doubt that the low grade ore will continue, and thus bring the Richmond ore-shoot definitely down to the footwall.

Besides the ore-bodies in or near the quartzite, we find, as the walls approach in depth, considerable deposits upon the hanging wall. Still again we find numerous isolated bodies away from either contact. The Eureka has uncovered such bodies on several of its levels. The Richmond, also, has two such bodies on its fifth level west of the shaft, which are quite large, and which promise to be valuable.

They have another isolated body near to the shaft on the eighth level, at a point 44 feet away from the footwall; also, several smaller bodies in the winze near the shaft connecting with the ninth level; also, at several places in the Lizette Tunnel. In addition to the isolated bodies just enumerated, we find low grade ore and ore-stains very generally scattered throughout the vein limestone wherever drifts have penetrated it.

Assays of a large number of these ore-stains, taken from various localities on the surface and beneath it, were put in evidence in the recent suit. As fair samples we may present the following: No. 2, $12.55; No. 3, $5.80; No. 4, $2.19; No. 44, $3.60; No. 47, $5.74; No. 48, $3.92; No. 49, $3.14.

Numbers 2, 3, and 4, were from the surface of the Richmond at the points marked on the Map II, III, and IV. No. 44, was from

the extreme westerly end of the Eureka third level; Nos. 47, 48, and 49, were from the Eureka ninth level.

Ore extends in the Jackson Mine from wall to wall at the point on the 460-foot level where the quartzite and shale come nearly together. A like phenomenon is visible at the K. K., third level, where the walls are 280 feet apart.

The Potts Chamber also touches the hanging wall at the bottom of the winze, 6 G, on the sixth level of the Richmond, and comes within ten feet of the footwall at the point on the level above, heretofore noted. The ore-bodies generally follow the depressions of the footwall, and occasionally pass across the promontories.

Those in the Richmond pitch northerly and northeasterly; those in the Eureka, northerly, northwesterly and northeasterly; while those in the K. K. pitch mainly northeasterly. I use the word pitch, as contradistinguished from dip, to denote the inclination of the ore-shoots laterally. The dip, in strictness, must be at right angles to the course, and hence does not describe a variation from that direction.

The surface map exhibited is also the work of Mr. Read, whose skilful, patient, and constant labors have done so much to elucidate the relations of the ore-bodies in Ruby Hill.

Elaborate maps were also put in evidence during the late suit by the Richmond Company, prepared by their surveyor, Mr. Wescoatt. The company, moreover, exhibited a glass model, constructed on a different system from that above described. In this model the main sections were horizontal, and vertical sections, taken at will, were represented by introducing vertical glass plates between the horizontal ones. The effect was to give a striking representation of those bodies of ore which it was desired to emphasize, and to omit the rest almost entirely. The two models, reduced to the same scale and taken together, would have given a far more complete picture.

It will sufficiently appear from the foregoing description that the mineralized limestone zone of Ruby Hill, which I have called a lode or vein, is not so called because it conforms strictly to the definition of a fissure-vein, given in the books. The term has been used in the miners' sense, and in the sense in which, as the court declared, it is employed in the law. At the same time my object has been to describe fully the thing itself; and if any exact and recognized English name for it can be suggested, I shall be glad to hear it. The latest writers, at home and abroad, confess that the deposits of lead ore in limestone do not strictly fall under the old Saxon classification. This is from the declaration of Prof. Cotta, who may be re-

garded as one of the authors, and the chief representative of that classification. But I leave to other hands the theoretical discussion of the phenomena, and of the principles, both of geology and of mining law, illustrated by them.

THE EUREKA-RICHMOND CASE.

BY ROSSITER W. RAYMOND, PH.D., NEW YORK CITY.

(Read at the Amenia Meeting, October, 1877.)

IN the case of The Eureka Consolidated Mining Company *v.* The Richmond Mining Company of Nevada, recently tried at San Francisco, California, the real defendant was the Richmond Consolidated Mining Company, of London; but this being a foreign corporation, holds its mining property in Nevada through the Nevada corporation of similar name, in which the London Company owns all the stock, except the few shares necessary to "qualify" the American directors. The trial would naturally have taken place in the Circuit Court at Carson City, Nevada, and before a jury. But by stipulation of the parties, the case was tried in San Francisco, before Hon. Stephen J. Field, Justice of the Supreme Court of the United States, Hon. Lorenzo Sawyer, United States Circuit Judge of the Ninth Circuit, and Hon. E. W. Hillyer, United States District Judge, for the District of Nevada. The hearing began July 23d, 1877. The witnesses occupied two weeks, and the argument of counsel three days. Very eminent lawyers were engaged on both sides; for the plaintiff, Messrs. Solomon Heydenfeldt, R. S. Mesick, John Garber, and H. J. Thornton; for the defendant, Messrs. S. M. Wilson, Thomas Wren, and J. J. Williams. The court held the case under advisement until August 22d, when Mr. Justice Field delivered its unanimous opinion in favor of the plaintiff. The action was a complaint in ejectment, and an appeal was taken to the United States Supreme Court.

The questions at issue between the Eureka and the Richmond Company in this suit, comprised several points in the construction of the mining law of the United States, and its relation to the customs and regulations of the mining districts, which possess an importance and an applicability far beyond the limits of the case in which they arose. It is my purpose to state these points, the arguments

concerning them on both sides, and the grounds on which they were decided by the court. The case involved also an interesting discussion of the nature and process of formation of the argentiferous lead deposit of Ruby Hill, which I shall attempt to sketch. For a description of the locality and its vein-phenomena, I refer to the elaborate paper of Mr. W. S. Keyes, which is presented to the Institute simultaneously with this one, and to which this is intended as a companion. Mr. Keyes's paper being accompanied with accurate maps, it will be unnecessary for me to offer any such illustrations of the statements herein made.

The contest between the two companies turned upon two questions: First. Are the two mines working upon the same vein or lode, within the meaning of the law? Secondly. If they are upon the same vein, where should the boundary-plane be drawn between them? And if upon different veins, how are the respective rights of the parties affected by the locations, patents, and former agreements?

The first question involved two inquiries. The first of these relating to the nature of the deposit in dispute, and the theory of its formation, possesses a scientific interest outside of its application to the immediate argument; the second, relating to the meaning of the terms, "vein," "lode," and "ledge," as used in the United States law, is universally applicable to mines held by titles proceeding from that law.

Again, this latter inquiry involves an investigation of the popular and scientific usage of the terms referred to, and of the bearing of strict geological classifications upon questions of mining rights.

It involves also a determination of the force of a boundary-line, established between two mines on the surface, and the direction of its projection in a plane underground.

1. THEORY OF THE FORMATION OF THE RUBY HILL DEPOSIT.

It was admitted on both sides that the ore-bodies of Ruby Hill occur in a zone of limestone, lying upon quartzite, and highly tilted and broken up; that none of the fissures in this limestone had been found to penetrate the quartzite or to pass beyond a certain layer of argillaceous shale, alleged to bound this limestone zone on the hanging-wall side. This clay or shale has been exposed in numerous places, by cross-cuts underground, at varying distances from the quartzite. It is also visible on the surface. The experts of the

Eureka Company considered it to be demonstrated as a continuous layer, and as a boundary of the ore-bearing limestone. Beyond it, they found limestone again, which they described as different in character and appearance from that within the ore-bearing zone. Microscopic slides were produced, to show that in its minute structure, the limestone of the zone shows the result of crushing, disintegration, solution, infiltration, recementation, and mineral deposition, which are comparatively absent from the exterior overlying limestone. Both are magnesian. The experts of the Richmond Company did not deny (I think) that the layer of argillaceous shale or clay might be continuous; but they thought this was not proved, and some of them believed the different exposures made of it to have no connection with each other. They denied also any essential difference between the limestone within and without the alleged zone. While the facts as there developed left room for differences of opinion on these points, the great preponderance of probability as to the existence of a continuous boundary on the north of the ore-bearing limestone zone, in the form of a layer of shale, lies with the affirmative. The fact is, indeed, as clearly proved as the nature of the case would permit. As to the difference in the limestones above and below (north and south of) this layer, one fact was necessarily admitted,—that no ore-bodies have been found near it on the north side, while the limestone zone on the south contains numerous and extensive ones, and is of such a character that explorations anywhere in it may at any time expose ore. The bulges of the quartzite footwall, described in the paper of Mr. Keyes, were also admitted, under various names, by all the experts. Some called them capes; some spoke of the intervening spaces as bays or grooves in the quartzite. Some of the Richmond experts did not consider these irregularities in the surface of the quartzite as the results of pressure and "buckling," but thought they might have existed in the surface on which the limestone was deposited. This view was, however, not seriously insisted upon, and certainly does not, in my opinion agree with all the facts.

According to the theory held by the experts of the Eureka Company, the deposits of Ruby Hill, in their present form, are due to the following processes:

The quartzite is a metamorphosed sedimentary rock. It has been lifted, with the superincumbent limestone strata, to its present position, by forces connected with the general upheavals forming the north and south ranges of mountains in Nevada. The volcanic rocks

appearing to the eastward are probably connected with the same process. But it is noteworthy that the quartzite under Ruby Hill was lifted along a line departing from the north and south line of the mountains of which Ruby Hill is a spur. The strike of the Ruby Hill quartzite shows moreover that it was curved and doubled, as well as lifted. The result of this movement was, that the quartzite layer had less room in depth than along the present outcrop, and the uplifted quartzite formed a sort of basin, buckling or bulging in depth near the points of greatest curve in course. But this buckling of the quartzite could not take place without intrusion into the solid limestone above, and hence the limestone, subjected to oblique upheaval and torsion, and to the intrusion of the quartzite, was much more violently shattered and fissured than by an ordinary upheaval. The process need not have been rapid; a very slow operation of lifting, rubbing, and side-pushing, from the underlying quartzite, would account for the crushing of the limestone, and for the existence of smooth planes of movement, in various directions, upon masses of limestone not crushed, or upon aggregates once crushed and subsequently cemented together again.

This action was limited, comparatively, to the zone of limestone immediately overlying the quartzite. In this zone or layer, which may have been from two hundred to three hundred and fifty feet thick, there appears to have been no argillaceous strata. But at that distance above the quartzite there seems to have been a bed of clay-shale and lime-shale, along which the limestone beds in process of upheaval and contortion could part and slip. The slipping is traceable on the present clay hanging wall in all the mines of this series, from the Richmond to the Jackson; this clay being the remainder of the former laminated beds, from which percolating water has removed a portion of their lime. The present varying thickness of the clay is due, in large part, to the effects of the slipping, which has rubbed it thin in some places, to bunch it up in others. This clay dips from the surface more steeply than the quartzite, a peculiarity due to the internal movements of the limestone zone between them. There is no reason to doubt that the contact-planes between shale and limestone, limestone and quartzite, were originally parallel. But the side-pressure attending the upheaval, causing the quartzite to buckle or bulge, and intrude upon the limestone, not only crushed and shattered the latter, but forced it to move in considerable masses to make room for the intruding "capes," or swellings of the footwall. These might push the fragments of limestone among themselves right and left, as

well as up or down, at first; but the fragments first moved, wedging among the pieces of broken limestone, still in place, would move them in some direction; and the general resultant of all these internal movements, would be to drive masses of fragments or solid wedges of limestone upwards toward the outcrop. The zone of limestone between the shale and the quartzite is, therefore, wider near the outcrop than it is below, because, near the outcrop it contains limestone which has been squeezed and jammed up into that portion of it from portions lower down on the dip. The lateral movements within the ore-bearing zone were, perhaps, most extensive in the Jackson Mine, where the quartzite swings round to what appears to be its regular north and south course, and the convex curve of the quartzite has crowded the limestone aside in all directions, until the clay hanging wall and the quartzite are almost in contact, with a seam of ore between.

The limestone zone thus crushed and dislocated presents, on a large scale, the phenomena described under the head of "Veins of Attrition" (*Contritionsgänge*), in the treatise of Weissenbach, published posthumously by Cotta, in the first volume of the *Gangstudien*, Freiberg, 1850. The classification is partly quoted in Whitney's *Metallic Wealth of the United States*, Philadelphia, 1853. Weissenbach discusses chiefly under the head of *Contritionsgänge*, the processes by which fissure-veins are filled to greater or lesser extent with the products of the disintegration, crushing, etc., of the country rock of one or both walls. He says (p. 24), that in consequence of the movements of the walls, aided by decomposing influences, "the whole vein itself may be filled up with such crushed, split, shifted, and cemented fragments of the country rock." After describing these phenomena, as presented by fissure-veins intersecting the stratification, he continues: "Finally, this kind of products of crushing from the disintegrated country rock occur frequently in a perfectly similar manner along the lines of stratification and cleavage in the older schists." It is evident that whether the plane of the action be that of a fissure across the stratification, or that of a parting between two sedimentary rocks, or two layers of the same rock, the effect of the crushing of one wall to a certain distance by the movements and pressure of the other wall, would be to produce a zone of material full of fissures and interstices. And the aggregate of these interstices and fissures would constitute, in that case, the equivalent of a fissure open to receive liquid solutions or gaseous emanations of metallic ores, just as we say, when a river like the

Humboldt ceases to flow visibly on the surface, but continues for some distance to percolate beneath the surface through gravel or sand, that the interstices in this material are the equivalent of an open channel. In a zone of rock, thus shattered and dislocated, the deposition of ore may take place from the same causes, and in the same manner, as in a single open fissure.

Into the limestone zone of Ruby Hill, thus prepared as a matrix, heated mineral solutions and gases are believed to have ascended, permeating the limestone breccia and filling the interstices with metallic sulphides, arsenides, and chlorides. The traces of this original deposition are found in the iron pyrites, arsenical pyrites, and galena, which occur sparingly in the mines at present. Probably, these ore-bearing solutions entered through fissures in the quartzite; but these may be at greater depths than will ever be reached in mining. All that can be definitely declared is, that they penetrated throughout the limestone zone, bounded by a practically water-tight wall of quartzite on one side, and a practically water-tight wall of clay or shale on the other. If this process had gone on alone, and no other change had followed, we might expect the whole zone to present a network of small threads, seams, druses, and nodules, of these unoxidized ores. Possibly, there would have been considerable bodies of ore, here and there, but the probable absence of large open spaces in the limestone would not have favored such accumulations.

During this process, however, and particularly after it had impregnated the zone between the two walls described, a third and most important process began, namely, the infiltration of water from above, the effects of which are now predominant throughout the accessible portions of the zone. To this cause are to be ascribed the chemical changes throughout the zone which precipitated the oxide of iron, arseniates of iron and lead, carbonate of lead, molybdate of lead, sulphate of lead, sulphate of lime, sulphate of magnesia, "black carbonate," etc. Furthermore, this cause produced the natural caverns, by enlarging the original fissures and interstices in the crushed and broken limestone. All that is necessary to effect these results is the presence, dissolved in the surface-waters, of carbonic acid and air. But the transformation of sulphides and arsenides into oxides and carbonates is attended with a considerable increase of volume; and as Bischof has shown, with regard to galena and cerussite, in his *Chemical Geology*, a part of the oxidized salts is carried away in solution. This agency, together with the transportation of materials in suspension, has contributed to the formation of large

ore-bodies, which are accumulations of the disseminated minerals, once more widely scattered in the zone from the quartzite to the shale. These minerals have been oxidized and carried along in solution or suspension, to be deposited or precipitated where the current was interrupted, or some convenient bottom or cavity was encountered to receive and retain the deposited material. The form, size, and position of the ore-bodies in this zone of crushed limestone, and, in general, the distribution of ore in the zone is, according to this theory, the final result of several processes, the last of which has determined the present condition of the zone in these respects. In confirmation of this view numerous facts may be cited. For instance, the natural caverns found in the mines have deposits of ore in and under them. There are seams of oxidized material along the quartzite footwall, and the ore-bodies, however irregular in shape, generally either lie on the footwall or tend towards it in depth, precisely as they might be expected to do if deposited by waters percolating downwards. Where the footwall is steep, there is less ore accumulated on or near it; where it is flat or concave, experience in the K. K. and Eureka mines, leads the miner to expect large ore-bodies.

Another confirmation of the theory, according to which all the ore-bodies in this zone have a common origin and are related to one another as subordinate features of the same deposit, was furnished, somewhat to the discomfiture of the Richmond party, by explorations made in the mines while the suit was pending. These explorations established, beyond dispute, the connection of the ore-body in dispute with the footwall seam of ore and with an ore-body in the acknowledged ground of the Eureka. The opportune demonstration of this connection merely corroborated the views already expressed, on other grounds, by the Eureka experts. [I should, perhaps, explain that when the trial of the case began, the connection of these two ore-bodies was denied by the Richmond party, and through a considerable part of the trial that position was maintained. The testimony of the two bodies of experts was somewhat contradictory as to the existence of any clearly-traceable seam of ore, or "orey-matter," leading from one to the other. But the arrival in San Francisco of Mr. Clarence King, who had remained later at Eureka than any other expert on either side, and had examined openings in the mines made after the rest had gone, changed the situation materially. Mr. King testified to a connection between the two ore-bodies, and the only course left to the Richmond party was to claim the "Eureka ninth-level ore-body" as a "spur of the Richmond vein."]

In opposition to this theory of the formation of the Ruby Hill deposits, the experts of the Richmond Company declared that the limestone was traversed by distinct and independent fissures, "or systems of fissures," of which the Richmond Mine possessed one, called by them the Richmond vein; that this vein could be traced from the surface downward through all the workings; that the disputed "Potts Chamber" or ore-body belonged to it; that it possessed a course oblique to the course of the limestone zone, namely, that the Richmond vein coursed west of north and east of south, and dipped (at right angles to this course) eastwardly into the Eureka ground. Since the "fissure or system of fissures," thus described, could not be proved to extend in either direction beyond the limestone zone, and the horizontal extent of it was limited, the theory was set up that it constituted a "pipe-vein."

This name, as applied in mining literature hitherto, refers not to a separate ore-deposit, but to what we call an ore-body, or "chimney," of a certain elongated shape, lying in, or connected with, other ore-deposits. The term has never been used very generally by miners; it originated apparently in Derbyshire; but its use even there appears to have died out. At least the latest writer concerning that district does not employ it; and it has survived in textbooks merely by the process of quotation. But some of the experts who defended its use in the present case declared, that if they had never before seen or heard of a pipe-vein, they would feel justified in inventing the term for the Richmond deposit. To this, as a piece of scientific classification, there would be several objections. In the first place, it is always unwise to revive an old and obsolescent term in a new sense. In the second place, the naming of an ore-deposit merely according to its form, is not scientific. It is true that names now exist, inherited from the miners, and conveniently related to systems of exploitation, which have no better foundation than the form of the deposit. But geologists are well aware that the use of these names often involves the confusion of real distinctions and the concealment of real similarities. At a time when men of science are seeking to frame a classification of ore-deposits representing their true genesis and relations, it seems puerile to propose a new class, differing from known classes, not in chemical or mineralogical features, or method of formation, but simply in the form of the paying ore-body. It is true as Posepny has well shown in his treatise on the lead deposits of Carinthia, and as Cotta long ago admitted, that metalliferous formations like the whole zone of Ruby

Hill require to be classed by themselves. A new name, even if it were a good one, might be acceptable; but it is needed for the whole formation, not for a small interior feature of it. In the essay already referred to, Posepny forcibly shows how by the adoption of such partial diagnosis, the several parts of one and the same ore-deposit have been classed as deposits of different kinds, and fissure-veins, contact-veins, beds, stockworks, and impregnations have been mixed together in wild confusion.

But the Richmond pipe-vein either in the old, "historical," or the new "actual" sense of the name, has ceased for all parties. Explorations made during the trial, and continued since, have demonstrated, in the second and fourth levels of the Richmond Mine, a large and rich body of ore—the most valuable, perhaps, that has ever been exposed in the mine—lying on the quartzite, and completely contradicting by its form, position, and direction the "pipe-vein" theory. But for adherence to that theory, this body could have been discovered earlier. Its discovery and exploitation now, confirm the opinion expressed in San Francisco by the writer, that the degree of apparent unity and continuity of the ore-bodies constituting the Richmond "vein," was due rather to the form of the underground workings than to the distribution of ore in the zone. In other words, by selecting certain bodies and their connecting clefts, and pursuing these upon a theory, without exploring ground outside of them, a delusive appearance was given (not intentionally, but almost inevitably) to the underground exposures. The Eureka Company, exploring systematically along the quartzite footwall, and cross-cutting to the shaft at intervals, obtained a much clearer view of the whole zone. The Richmond Company, following a single direction, deceived itself into the belief that its ore-bodies were not distributed through the limestone like those of the Eureka, and that they had no such relation to the quartzite footwall as was admitted to have been shown in the Eureka. But now the simple adoption of the Eureka system of exploration puts a new face on the whole matter. The zone is proved to be similar throughout. Nature did not draw the boundary line between the two mines, and operate differently on the two sides of it. It was men who created both the arbitrary line and the imaginary difference.*

* Since the reading of this paper, the work in both mines has further confirmed these conclusions; and has proved, moreover, so enormously profitable to the two companies, that even the parties defeated in the late contest may well afford to

2. PRACTICAL UNITY OF THE RUBY HILL DEPOSIT.

But the geological argument was not the essential or controlling one in the late suit. The theory adopted by the Eureka experts might have been proved wholly at fault as to the manner of origin of the deposit; and still the question would have remained, whether in view of all the facts, the limestone zone of Ruby Hill, definitely bounded between two walls, and carrying throughout irregular bodies of the same ore, was not a lode or vein within the meaning of the law? It is true that the theory above referred to, by showing a unity of origin, and by ascribing the present form and position of the ore-bodies in a great degree to secondary action, strengthened the Eureka case. But without any theory at all, the case was strong; and the decision of the court indicates that quite apart from the struggle which so deeply interested the experts, fact, not theory, won the day.

It is a well-known principle that the law follows the ordinary, popular meaning of words, where it does not itself define them. The meaning of the terms "lode," "vein," and "ledge," which seem to be employed as synonymous in the law, is made clear by the following considerations.

1. These terms are all drawn from the miner's vocabulary, and in their origin were applied indifferently to fissure-veins, contact-veins, segregations, and even to beds. The word "lode" is a corruption of "lead," and signifies at bottom merely the channel in the rocks which leads or guides the miner. Its use in the compound "lode-stone" has the same significance. The German word *Gang* is from *gehen*, "to go;" and it meant at first simply the way or path of the ore. It is quite true that scientific writers have adopted these words in a narrow sense, often prefacing them, however, with defining terms (fissure-vein, true vein, *wahrer Gang*, *Spaltungsgang*). But the wider sense is not obsolete.

2. Present usage among miners, engineers, geologists, and even authors shows the force of the words to go beyond the technical definitions. Thus we hear of coal veins, of the magnetite veins of New Jersey, of the copper veins of Ducktown, Tennessee, and many other cases in this country, in which the ore-deposits are admitted

be content with a "formation" so much better for their interests than they were willing to believe it. See the Report of the Richmond Investigating Committee (London, May, 1878), and articles thereon in the Engineering and Mining Journal of July 13, 20, and 27.

to be beds. In England, and even in Europe, the same thing may be observed, though it is more common in the English language than elsewhere, because that language lacks a convenient term to designate a mineral deposit, the precise character of which has not been ascertained. Miners finding an outcrop call it a vein, or ledge, or lode at once, before they know more about it; and the name sticks to it in spite of subsequent explanations.* Nay, even the scientists themselves, after clearly explaining the technical sense of the term, drop comfortably into the popular sense.†

---

* In order not to burden this paper with citations, I here group together a number of references, going to show, first, the nature of the definition of a lode, and the transition of one class of ore-deposits into another; secondly, the adoption of the popular usage by authors, who apply the terms "vein" and "lode" to deposits not fissure-veins, and even to beds; thirdly, the peculiar nature of lead ore deposits in magnesian limestone; and, fourthly, the nature of "pipe-veins." The authorities are:

Cotta's Ore Deposits (Prime's translation), pp. 26, 155, 157, 178, 179, 182, 185, 252, 254, 269, 332, 333, 334, 338, 481, 432, 479, 497.

Grimm's Erzlagerstätten (Pribram, 1869), pp. 15, 231.

De la Beche's Geological Observer, p. 644.

Gaetzschmann's Auf-und Untersuchung, etc. (Freiberg), p. 70.

Whitney's Metallic Wealth of the United States (Philadelphia, 1854), pp. 40, 187, 189, 190, 273, 302, 302, 303, 312, 322, 323, 324, 347, 361, 365, 370, 373, 374, 377, 378, 395, 414, 412, 432.

Posepny's treatise on the lead and zinc deposits of Carinthia (Geologische Reichsanstalt, Vienna, 1873), p. 390, 410 and passim. This is a very strong authority, being recent, eminent, and thorough; and being, moreover, based on the study of deposits strikingly similar to those of Ruby Hill. I believe that Mr. Posepny has, during a recent visit to this country, himself visited Eureka, and recognized the similarity. It is sufficiently evident from a study of the maps of the mines. This author proposes the term "typhon-formation" for such deposits, in allusion to the geode-structure of the ore-bodies.

Henwood on Metalliferous Deposits, Part i, pp. 619, 620. This authority was quoted incautiously on behalf of the Richmond, in the trial, because it mentions a "pipe-vein" But an examination of the passage shows the pipe-vein to be included in a "lode" of limestone!

It would be easy to multiply authorities on the points referred to; but I forbear.

† Since presenting this paper, and preparing it for publication, I have received from Dr. Foster a copy of his paper on the Great Flat Lode in Cornwall, printed in the Quarterly Journal of the Geological Society for August, 1878. The following passage bears directly upon one of the questions involved in the case discussed in this paper:

"The terms lode or mineral vein, commonly regarded as synonymous, are usually taken to mean the mineral contents of a fissure. . . . I have endeavored to show in paragraph ii, that the Great Flat Lode is, in the main, a band of altered rock. Much of the veinstone extracted from some of the largest Cornish mines, such as Dolcoath, Cook's Kitchen, Tincroft, Carn Brea, and Phœnix,

3. The law itself makes but two classes of metalliferous deposits, namely, "veins" or "lodes," or "ledges" of "rock in place," and placer deposits. The inference is clear that the first class includes more than technical fissure-veins merely. But this inference is raised to certainty by the express inclusion of quicksilver deposits under the terms referred to, and the actual location and purchase of such deposits under the law, although they are, in this country at least, not fissure-veins, but impregnations and masses of ore distributed through zones of rock.

Now in the case of Ruby Hill, the "rock in place," contemplated by the law, is plainly the limestone zone, and the limestone zone, therefore, is in the eye of the law, for the purposes of the law (and, as it has now turned out, for the purposes of the miner also), the lode. That it is a fissure-vein, nobody ever pretended. That its not being a fissure-vein could prevent its being located and held under United States law, nobody ought to have pretended. The principle followed in this part of the decision of the court is simply common sense. It has been asserted by over-hasty or interested critics that the application of this principle will unsettle many mining titles. This is not true. There is nothing in the decision which involves the conclusion that has been drawn from it, that whole mountain ranges, or whole mining districts, must be held to be single veins. The courts will continue to investigate facts; and when the facts, interpreted by common sense, prove a given zone of rock to be in the practical sense and for practical purposes a vein, they will not feel bound to call upon learned geologists to say whether it is a fissure-vein; that is all. The law is confessedly loose and de-

---

for instance, closely resembles the contents of the Great Flat Lode, and was probably formed in a similar manner; indeed, I question very much whether at least half the tin-ore of the county is not obtained from tabular masses of stanniferous altered granite. If, then, many of the important lodes of such classic ground as Cornwall do not satisfy the common definition, one of two things ought to be done: either the miner should give up the term lode for these repositories, or else the meaning attached to the word by geologists should be extended. I need hardly say that the first alternative is not likely to be adopted; nor do I think it is one to be recommended; for I believe that one and the same fissure traversing killas and granite may produce the two kinds of lodes. . . . I should propose, therefore, that the term lode, or mineral vein, should include not only the contents of fissures, but also such tabular masses of metalliferous rock as those I have been describing. . . . If, however, this course should be thought on the whole undesirable, the geologist and miner must agree to differ in their language; and some of the *lodes* of the latter will have to be designated as tabular stockworks by men of science."

fective. Probably we shall never have a law free from difficulty in administration until the system of vertical boundary-planes, now prevalent in our older States and elsewhere throughout the world, is adopted. But we are still far from that happy time; and meanwhile, the decision in this case has done much to put an end to pedantic constructions which aggravate existing evils. The admirable language employed by Mr. Justice Field, in announcing the decision of the court, completely states the case. He says: "It is difficult to give any definition of the term (lode) as understood and used in the Acts of Congress, which will not be subject to criticism. A fissure in the earth's crust . . . would seem to be essential to the definition of a lode in the judgment of geologists. But to the practical miner, the fissure and its walls are only of importance as indicating the boundaries within which he may look for and reasonably expect to find the ore he seeks. . . . We are of opinion, therefore, that the term as used in the Acts of Congress, is applicable to any zone or belt of mineralized rock lying within boundaries clearly separating it from the neighboring rock."

3. THE FORCE OF UNITED STATES PATENTS.

The Richmond party contended for the following points, involving questions of general importance to American miners:

1. It was contended that certain patents put in evidence by the Eureka were void on their face, because they covered locations of which the end-lines were not parallel, whereas, the law of 1872, under which they were granted, requires that the end-lines shall be parallel. As to this point, the court held that the defect did not void the patents, nor concern the Richmond Company.*

* The precise language of the decision is, "In the first place, it does not appear upon what locations the patents were issued. They may have been, and probably were, issued upon locations made under the Act of 1866, when such parallelism was not required. . . . If under any possible circumstances a patent for a location without such parallelism may be valid, the law will presume that such circumstances existed. A patent of the United States for land, whether agricultural or mineral, is something upon which its holder can rely for peace and security in his possessions. In its potency it is iron-clad against all mere speculative inferences. In the second place, the provision of the statute of 1872, requiring the lines of each claim to be parallel to each other, is merely directory, and no consequence is attached to a deviation from its direction. Its object is to secure parallel end-lines drawn vertically down, and that was effected in these cases by taking the extreme points of the respective locations on the length of the lode. In the third place, the defect alleged does not concern the defendant, and no one but the Government has the right to complain."

2. It was contended that two patents held by the Richmond, although granted under the Act of 1872, upon application made after the passage of that Act, were based upon locations made under the Act of 1866, and conveyed to the patentees certain rights, accruing under the earlier Act, and explicitly continued by the provisions of the later one. The chief of these was the right to take a certain number of feet on the course of the main lode located, and follow the lode, throughout that distance, downward on its dip, unrestrained by the end-lines of the patented survey. In other words, it was claimed that since the so-called Richmond lode ran obliquely across the patented survey of the Richmond, and dipped into adjoining ground outside of the planes formed by projecting the end-lines of that survey vertically downward, and since that lode was held by a patent granted under the Act of 1872, but based on a location made under the Act of 1866, the owners of the Richmond claim could follow the ore on its dip into the disputed ground, notwithstanding the boundary planes presumptively established by the patent.

This claim involves some very important questions of construction of the law, and deserves a careful analysis. It asserts, first, that the Act of 1866 authorized the location of so many linear feet of a lode, and that the patent under that Act conveyed the title to that number of linear feet, "together with all its dips, angles, and variations, to any depth, although it may enter the land adjoining," with a certain amount of surface ground, merely for convenient working, but that the grant of the surface had no limiting effect upon the extent of the miner's claim, thus confirmed to him by sale. This, it will be remembered, was one of the points involved in the Emma-Illinois case in Utah, where, the Emma patent survey having been so made as to lie across the vein, the Court is said to have held that the patentees were nevertheless entitled to the full length of the claim, and to follow it *on the strike* or course, to that extent, outside of the patented boundaries. That decision was questioned in many quarters; but a compromise between the parties prevented any appeal and review by higher authority. The Hercules case, in Colorado, presented a similar question, and was decided by Judge Buford in the opposite sense. The point remained undecided by higher authority. My own views concerning it were expressed editorially at various times in the *Engineering and Mining Journal*, and officially in 1876, I believe, before the Committee on Foreign Relations of the House of Representatives on the "Emma Mine Investigation." I see no reason to change them, now that they have received at many points the con-

firmation of high judicial authority. That the Act of 1866 was in many respects obscure, is admitted; but I think a fair construction of it clearly shows that under it the patentee of a mine is bound by the end-lines of his patented survey. In attempting to establish this proposition, I shall pay no attention to the decisions which have from time to time emanated from the General Land Office. "Department law," as it is called, is not binding upon courts; and the law laid down by this particular department has been, under some of the commissioners, remarkably bad. Nor shall I confine myself to the points adduced by either side or by the Court in the case now under review.

The Act of 1866 recognized and confirmed, where it did not overrule, the customs of miners. It was universally the custom of miners on the public domain, to locate and record claims upon discovered lodes by linear feet, measured from the "discovery shaft," the length of each claim, the width of surface-ground controlled as an easement or appurtenance for mining purposes (buildings, roads, dumps, etc.), and the nature of the possessory tenure, being governed by local regulations in each district. Since priority of location and record determined all disputes as to possessory title, it was necessary to make such record as early as possible after discovery, and, therefore, before the true course of the lode could be ascertained. Hence the discoverer, though he usually included in his record a statement as to the course of the lode, might find upon futher developments, that he had been entirely mistaken. To make a new location and record, containing the corrected facts, might involve the sacrifice of precious priority; since in most cases (particularly if the lode was rich) hosts of other claimants would be located in the vicinity, some of them already occupying the ground which the discoverer meant to claim, and to which in equity he was entitled. A striking instance occurred in the case of the famous Eberhardt Mine at White Pine, which was originally supposed (and described in the record) to run east and west, whereas it really ran north and south. Numerous shafts were sunk side by side on alleged parallel veins, which turned out to be all on the course of the Eberhardt. Such complications are apt to be settled in new communities by violence as well as litigation, ending generally in compromise. But it is fair to say that the mining communities, apart from the persons interested in any special case, recognized the right of the earlier locator to "swing his claim," that is, to take the full number of linear feet to which he was entitled, without regard to the course described in his original record

of location. This is simply an equitable application of the well-known principle of "the worthier landmark." If, in a deed of land, the description of the land says that one of its boundary lines extends from a bend in a creek twenty chains north to a certain rock, and it is subsequently found upon re-survey that the rock (fully identified) is thirty chains south of the bend in the creek, the erroneous course and distance given in the deed are disregarded, and the natural objects described, being deemed the worthier landmarks, are permitted to establish the boundary in spite of the literal document. Similarly, when a miner records his claim to a certain number of feet upon a lode which he has discovered at one point only, it is the lode itself which is his landmark, and if, in obedience to a custom intended to assist other miners in recognizing the limits of his claim, he states in the record, as well as he can, the direction in which he supposes its course to lie, he ought not to be cheated out of the reward of his discovery or priority by reason of any inaccuracy in this description.

But to permit this state of things to continue indefinitely, would be contrary to public policy; and public policy—namely, the public benefit to be derived from the encouragement of mining—is the motive of the Acts of Congress by which the miner upon the public lands has been removed from the relation of a trespasser and created a tenant, with the privilege of becoming a proprietor. In the Act of 1866, the Government says substantially to the miner, "I own this land in which you are digging. I can make what rules I please to control your operations, or eject you altogether. But, for the public good, I will give you the right to occupy, and explore, and mine, and carry away my treasure, and to make what regulations you please to govern your relations to other miners, provided you obey certain conditions which I impose. One of these conditions limits your claim as an individual to two hundred feet as a maximum, and the claim of an association to three thousand feet. If you wish to obtain a title better than this permission, a title which does not depend on local regulations and cannot be affected by them, I will sell you a mine outright, provided that after you have done enough work to prove your good faith and define your claim, you will furnish an exact description of it by surface survey, establish your undisputed possession, and pay for it by the acre of surface. The right to follow your vein *in depth*, you shall retain; but you must define the length of your claim, so that your fellow-citizens may know where your property ends, and they may explore or mine,

and I may sell without wronging you. You cannot 'swing your claim' after it is patented. That privilege belongs necessarily to the period of exploration and mere tenancy. When you come to me for a better-defined title, you must be prepared to abide by the definition."

That this is the meaning of the Act of 1866, a careful study of its words will show. Section 2 of that Act provides that "whenever any person or association of persons claim a vein, ... it shall and may be lawful for said claimant or association of claimants to file in the local land office a diagram of the same, so extended laterally or otherwise as to conform to the local laws, customs, and rules of miners, and to enter such tract and receive a patent therefor, granting such mine, together with the right to such vein or lode, with its dips, angles, and variations, to any depth, although it may enter the land adjoining, which land adjoining shall be sold subject to this condition." (I have omitted some of the pre-requisite conditions, not essential to this argument.) We find here that a person "claiming a vein," may file a diagram of "the same," enter "such tract," receive a patent "therefor" granting "such mine," together with the right to follow "such vein" to "any depth."

Now to unravel this somewhat involved statement. What is "the same," of which a diagram is to be filed? It cannot be the vein, because the diagram is to be extended laterally or otherwise, according to the local laws. A diagram of a vein must be extended according to the facts. Local laws affect the dimensions of claims only; hence it must be the surface of the claim of which the diagram is required. The subsequent terms, "such tract," "therefor," and "such mine," all necessarily refer to the same thing, namely, the claim; and we are forced to the conclusion that the claimant is to furnish a diagram of his claim, enter the tract as homestead tracts or pre-emption tracts are entered, and receive a patent for it as purchasers of agricultural lands receive patents. This patent is to convey to him the tract, together with the right to follow the vein out of it, *to any depth*. There is no declaration here or elsewhere in the law, that a certain number of linear feet on the vein are to be conveyed to him, irrespective of the boundaries of his surveyed claim. Section 4 provides that no *location* hereafter made shall exceed 200 feet for each location, etc., and thereby overrules local laws, if any such exist, permitting larger locations. But this concerns merely the proper preliminaries to an application for purchase and patent. When that application is made, the applicant must not base it upon

a location of more than 200 feet.* But it is not said that he shall receive a patent for 200 feet or any other number of feet. He is to receive it for the "tract" and the "mine" actually described in his diagram.

Section 3 confirms this view, providing that after due formalities of advertising, etc., the Surveyor-General shall survey "the premises" and make a plat thereof, and that after certain other formalities, including the payment by the applicant of $5 per acre, the register shall transmit to the General Land Office "said plat, survey, and description, and a patent shall issue for the same" thereupon. Language could scarcely describe more plainly the purchase of a defined piece of land. The final sentence of this section, however, raises a difficulty. It provides that "said plat, survey, or description, shall in no case cover more than one vein or lode, and no patent shall issue for more than one vein or lode, which shall be expressed in the patent issued." This has been held to mean that the grant of the patent is for so many feet on the lode; that the "tract" is not granted, but only the use of the surface for mining purposes; that another patent can be granted overlapping it, if another lode be found to exist within the surveyed area. But this construction overrides the clear meaning of the preceding section, and a better one, I venture to think, can be easily found. The prohibition here expressed is merely directory; otherwise, it would be absurd. It is made the duty of the surveyor not to survey for the claimant on one lode a plat which includes another lode. But if, after a survey has been made, and a patent has been granted, another lode should be found within the patented area, what is the state of affairs? The patent is not voided thereby: so much is certain. The new lode may enter the tract in depth, having its outcrop or apex in the land adjoining. In that case, it is the right of the adjoining locator to follow it. Or, it may crop out within the patented area. In that case, so much of it as lies within "the tract" (*i. e.*, the surface and the space beneath it, bounded by vertical planes), belongs to the patentee by reason of the grant of the tract, or else it still belongs to the government, by reason of the reservation now under consideration. In the latter case, it can be located and worked within the tract by nobody but the patentee, or some one whom he may permit to enter upon his land for the purpose. For the patentee owns the land, either completely and with all it contains, or else for mining purposes; and in either case, no other claimant can intrude upon it. If the patentee is forbidden

to touch the new lode, then it is within that area practically locked up. But we are not forced to any such absurd conclusion. The patent, as we have seen, grants two things: first, a certain tract *with all that it contains*, subject to one reservation, namely, the right of an adjoining owner to follow into it, in depth, the vein named in his patent; secondly, it grants a similar right with reference to the vein named in the first patent. The patent thus issues for the tract, and *for the lode in its downward continuation outside of the tract.* Now the law simply provides that the latter grant shall apply in each case to one lode only. Every patentee may have to submit to one intrusion, but one only, from his adjoining neighbor, following a vein downward into his tract. Every patentee may make one such intrusion, and one only, into his adjoining neighbor's ground. With this exception, the lines of ownership, under this law, have precisely the same effect as under the common law. They carry everything within the boundaries, and nothing outside. But whether I am correct in this view of the complete ownership of the tract or not, the force of the end-lines of the plat as bounding the claim upon the lode, which the patent is intended to cover, is undeniable. The Act of 1872 makes no change in this respect. It simply renders more positive and specific what was really the meaning of the Act of 1866, and extends the right to follow in depth, between the end-lines, to all lodes having their outcrop or apex within the tract. If, then, the right to disregard the end-lines of the survey did not accrue to the patentee under the Act of 1866, it cannot be one of the vested rights excepted from the operations of the Act of 1872.

But the contention we are discussing involves also the proposition that, assuming the grant of a patent under the earlier Act to have carried with it the privilege just discussed, then that privilege is a *right*, belonging to parties who made no application for patent until after the passage of the Act of 1872. Up to a certain time (let us assume for the sake of argument) the Government offered certain terms to purchasers of its mineral lands. During this period the Richmond claimants made no offer to purchase, but rested on their free right of exploration, etc., holding possessory title under the liberal terms of Section 1 of the Act of 1866. But after the government had changed its offer, and limited (as is asserted) the rights it was willing to sell, they became purchasers, and now claim the benefit of the bargain which they might have made, but did not! To a tenant on my farm, I offer the farm, together with a water-power,

at a certain price. He prefers to remain as tenant, and declines to buy. After awhile I decide not to sell the water-power, and my tenant, seeing the farm advertised, buys it, and then claims the water-power also, because, having once had a chance to buy it, he acquired thereby an "inchoate right" to it! This point was not clearly passed upon by the Court in the case here discussed, because the decision denies the right even of patentees under the Act of 1866 to disregard the end-lines of their surveys, and *a fortiori*, the "inchoate right" of mere locators, not applying for patent, falls to the ground.

4. THE FORCE OF A BOUNDARY FIXED BY AGREEMENT.

As the result of a previous litigation between the parties, a boundary-line had been established by compromise between them in 1873. This line (see map accompanying the paper of Mr. Keyes, line X W R, Plate VIII) was, with the exception of a small distance next the quartzite footwall, where the special transfer of a triangle of ground necessitated a deflection, exactly the line of the boundary between the two adjacent patents, and constituted the northwestern end-line of one patent and the southeastern end of the other. The Richmond party, claiming the right to follow its alleged vein in depth without regard to patent-lines, was obliged to meet the additional objection furnished by its own former act, and, to overcome this objection, asserted that "the agreement and deeds of compromise of June 16th, 1873, have no effect upon the rights of the parties to the land in dispute, except so far as the defendant (the Richmond) obtained new rights by conveyance of the Lookout ground at patent. With that exception, the parties stand on their original rights. The parties were only bound by the line *beginning* at point X on the diagram, and ending at R. *Beginning* at one point and ending at another, excludes the idea or possibility of any other beginning or ending of a line."

The Eureka party, on the other hand, claimed that "by the agreement and deeds of June 16th, 1873, the line W X, and necessarily W X, extended, was made the permanent boundary-line between the claims of the parties. The agreement says it was the object and intention to fix a permanent boundary-line between the claims of the parties. The claims of the parties were vein or lode claims. To make a boundary between them, the line necessarily must extend across the veins or lodes to the extent of the dips, or

the intention of the parties would not be accomplished. The deeds are in accordance with the agreement."

The deeds referred to are one from the Eureka to the Richmond, and one from the Richmond to the Eureka. By the former, the Eureka conveyed the Lookout ground, and also all the mining ground lying on the northwesterly side of the line designated, with the ores, precious metals, veins, lodes, ledges, deposits, dips, spurs or angles, on, in, or under the same. By the latter, the Richmond conveyed, with warranty against its own acts, all its right, title, or interest in and to all mining ground situated in the Eureka mining district on the southeasterly side of the designated line, "together with all the dips, spurs, and angles, and also all the metals, ores, gold and silver bearing quartz, rock, and earth therein, and all the rights, privileges, and franchises thereto incident, appendant, and appurtenant, or therewith usually had and enjoyed." The agreement declares it to be "the object and intention of the said parties hereto to confine the workings of the party of the second part (the Richmond) to the northwesterly side of the said line continued downward to the centre of the earth, which line is hereby agreed upon as the permanent boundary-line between the claims of the said parties."

On the issue thus raised, the following observations seem pertinent:

1. The decision of the Court as to the practical unity of the Ruby Hill deposit, involving its legal identity as one lode, covers the whole case, and renders the discussion of the present point unnecessary.

2. The decision of the Court as to the force of the end-lines of a United States patent has the same effect, so far as the claim of the Richmond to the ground in dispute (part of the Potts Chamber) is concerned. The compromise line, W X, was at the same time a patent end-line; and as such it must be, according to the decision, extended indefinitely on the surface, and projected downward in a plane to the centre of the earth, to form the legal boundary. Whether the Eureka, however, could claim the disputed ground under this ruling alone, would depend on its ability to prove that the ore-body of the Potts Chamber was part of a vein having its out-crop or apex within the patented ground of the Eureka.

3. Assuming now, for the sake of the inquiry, that either by a different decision of the Court, or by a different state of the facts, the Eureka could not claim this disputed ground by reason of the unity of the ore-bearing limestone zone, or by reason of any force in patent boundary-lines, we are to look at the compromise alone, and discover

what was its effect. This question, though less extensive and important in its general bearings than others settled by the decision of the Court, involves, nevertheless, an important principle, which may often receive application in mining matters. It will be considered here in its general aspect only; yet the remark seems to be warranted, in passing, that the peculiar circumstances of this case put equity as well as law on the side of the Eureka. The compromise was apparently an attempt to end all possibility of future dispute; and the subsequent denial of its force, to a certain extent, by the Richmond party, seems to be a technical evasion. But it is not necessary to impugn the sincerity of the counsel who, in the discharge of their duty, contended for this, as for every other proposition of law which favored their client.

The decision of the Court was, that the line agreed upon as a boundary between mining claims, must be extended along the dip of the veins. This obviously follows from the nature of such claims. A "claim" upon a vein is not a given surface only; nor is it only a given surface with what underlies it. It includes the right to follow the vein, and the ownership of the contents of the vein, on its dip beyond the surface lines, and between the end-lines. Hence all lines dividing such claims must be extended till they are coterminous with "all that the location on the surface carries," as the Court says, otherwise, they would not serve as boundaries.

It follows from this very reasonable decision, that when two proprietors of adjacent claims agree upon a partition boundary, whether it be a point or a line, the real boundary so fixed is a vertical plane, indefinitely extended so as to divide everything covered by the claims. If a different construction is intended by the parties, then it must be specially expressed.

Thus on every issue raised in the case, the decision was against the Richmond party. The case has been appealed; and the Supreme Court will doubtless be called upon, in course of time, to review the judgments of the Circuit Court, which I have in this paper at some length discussed. That the present analysis of these topics was not postponed until after the hearing of the appeal is due to three reasons. First, there will be a delay of months, perhaps years, in reaching this case on the Supreme Court calendar; secondly, it was necessary, if this paper were to be written at all, that it should be written while the subject-matter was fresh in mind; thirdly, the great interest taken in the late decision by the mining community and the legal fraternity, calls for such a full explanation of its bear-

ings as I have tried to furnish; and finally, the defeated party in this lawsuit, and some other parties, including mining journals in England, have indulged in unworthy insinuations as to "American justice," and ascribed the result in this instance to the circumstance that one of the contending parties was a British corporation. This sort of talk might be pertinent to an ordinary trial by jury. Its application to a case so patiently and thoroughly heard, and so convincingly settled by judges of eminence, is preposterous. Apart from the foolish insult which it conveys to men of high character and long experience, it ignores the force of the arguments used in their decision; and the best means of showing its utter baselessness, is a thorough discussion of the points and principles involved in the case so flippantly criticized. This I have attempted to give; and, in the light thus furnished, I think it evident enough that the Court had better reasons for its decision than any mere bias of patriotic feeling.

WHAT IS A PIPE-VEIN?

BY ROSSITER W. RAYMOND, PH.D., NEW YORK CITY.

(Read at the Amenia Meeting, October, 1877.)

THE term "pipe-vein" has recently been applied in this country to certain deposits of lead ore in magnesian limestone. The use of the term has been twofold. It has been revived as a term found in textbooks on mineral veins, with the implied or declared assertion that the ore-deposits thus named in this country are similar to those which have borne the title abroad. It has also been advanced as an appropriate name for a new class of deposits, even if such a class had not previously been recognized. In either case, the assumption is that pipe-veins form a group or class by themselves, and are not merely interior and subordinate features in larger deposits. The peculiar mining law of the United States, which regards "the vein," whatever that may be, as the basis of title, lends a special interest to these claims. But the object of this paper is rather to discuss the subject from the standpoint of geology and technical literature. I shall briefly answer two questions: (1) What are pipe-veins as described in technical literature? and (2) Is the name appropriate or necessary for a new class of deposits?

The term "pipe-ore," as applied, for instance, to irregular, cylin-

drical, sometimes hollow concretions of limonite, etc., probably came from Germany; but "pipe-vein" is of English origin—a miner's term, arising probably, in Staffordshire or Derbyshire. It is worthy of notice that the word "lode," as used by the Cornish and English miners, often carries among them a wider meaning than "vein;" so that more than one vein may be included in one lode. Thus, in a footnote to Henwood's "Metalliferous Deposits" (*Trans. of the Roy. Geol. Soc. of Cornwall*, vol. viii, part i, pp. 619, 620), a pipe-vein is mentioned as occurring within a lode of metalliferous limestone.

The first writer, so far as I know, who made a separate class of pipe-veins was Westgarth Foster, who published, early in this century, a work chiefly devoted to a section of the rocks across Great Britain. In this book, he gives a general definition of pipe-veins, and a description of their general appearance. The description has been copied into a number of textbooks without the definition. This is the case, for instance, in Jukes's excellent manual of geology. The reason appears to be that Foster's classification was never generally accepted, and is long since out of date. He was an adherent of the theories of Werner, and his work, however praiseworthy in its time, shared the fate of the system of geology which he had adopted.

Sir Henry T. de la Beche, in his *Geological Observer*, gave, for the first time, a rational classification of the ore-bodies known in Cumberland and Derbyshire as "pipes," "flats," "rakes," and "skrins" (Am. ed., 1851, p. 644); and Prof. Bernhard Cotta has quoted (Cotta's *Ore Deposits*, Prime's transl. p. 431) the description and the diagram of de la Beche. It is noteworthy, however, that Cotta restores the word "vein" in this connection, which de la Beche had carefully omitted. The language of the latter is significant. He says:

> "The cavities in that district wherein sulphuret of lead has been discovered are very numerous. When they rise through the beds, they are usually termed *pipes*, and when interposed between them, *flat* works. Upon studying the cavities in limestone districts of this character, it will be evident that these distinctions are not always very applicable, and that irregular cavities rising upward may have numerous branches from them, running amid the beds themselves, that joints may cross the cavities and real dislocations traverse the whole."

In other words, the terms *pipe* and *flat* are applicable, not to separate classes of deposits, but merely to the forms and positions which may be assumed by different portions of the same deposit. In the diagram and explanation which follow, the author shows how lead ore, introduced into a bed of limestone, may occupy true deep fissures

(rakes), enlarged spaces between the beds (flats), joints contrary to the bedding (skrins), or irregular cavities connected with the rakes, and caused, according to his diagram, by the intersection of these with the planes of the bedding. It is easy to see that along the line of such an intersection, an irregular elongated space might be formed through enlargement by water-currents, attacking the four corners of limestone exposed, and that the disposition of ore in such a space would result in a "pipe," or elongated ore-body, common to, and subordinate to both the rake and the flat. But de la Beche does not call it a pipe-vein. And Cotta says: "It is evident that the whole mass of limestone is traversed, in all accessible fissures and cavities, by ores and vein-stones, which have penetrated subsequent to its formation;" adding, a little further on, "The only veins now generally exploited in Derbyshire, are the rake-veins." This furnishes a striking practical confirmation of de la Beche's explanation. If the pipes are merely subordinate features of the rake-veins, then the working of the latter would be likely to become the main enterprise, and the pipes when encountered and exploited, would be regarded merely as ore-bodies in the veins. To such an extent has this become in fact the case, that Mr. William Wallace, the latest authority on the subject, does not mention pipe-veins at all in his exhaustive description of the very district which gave the term to technical literature (*The Laws which Regulate the Deposition of Lead Ore in Veins;* Illustrated by an Examination of the Geological Structure of the Mining District of Alston Moor. By William Wallace. London, 1861). But Plate XVI, of his book (opposite p. 144) presents what is evidently a pipe—namely, an elongated ore-body, following the intersection of a vertical vein with a horizontal bedding-plane. It is called, however, not a pipe, but "a rich lead-ore deposit *in Handsome Mea great cross vein.*"

The mines of Alston Moor were represented at the London Exhibition of 1851, by a most elaborate and beautiful model, exhibiting all their underground works, and giving, as Prof. Whitney remarked, "the features of every part of the district." It has been asserted that this model exhibits the pipe-veins. Fortunately, it is preserved at the Royal School of Mines in London, so that if it could ever throw any light on the question, it can do so at present, as well as in 1851. Not having seen it for nearly twenty years, and not wishing to trust a merely negative memory as to what it exhibits, or to rely upon the fact alone that the description of the model contained in the catalogue of the School of Mines makes no

mention of pipe-veins, I applied through a friend to the School itself, and received from one of the officers of its Museum of Practical Geology the reply, that the model contains "no indications of pipe-veins." This is positive evidence of the subordinate character of the pipes of ore.

Similar testimony is given by Prof. L. Moissenet, of the Paris Ecole des Mines (*Observations on the Rich Parts of the Lodes of Cornwall, etc.* Translated by J. H. Collins, F.G.S. London, 1877), who says (p. 2) of the lead-veins of the mountain limestone—the same as Wallace discusses—"To these lodes the pipe-veins and flats are attached; these are *accessory deposits* occurring in some of the limestone beds." (Italics mine.) Again, speaking (p. 10) of the ore-deposits of Cornwall, he says: "Floors and carbonas are accessory deposits. . . . The floors are analogous in structure to the 'flats' of the lead mines of carboniferous limestone. . . . The carbonas are rich masses of tin ore occurring in granite, the true equivalents of the pipe-veins of the North of England. . . . Mr. Henwood has described how they are related to the lodes."

Vague reference having been made by some advocates of the independent character of pipe-veins to the occurrence of such veins in Cornwall, and a paper by Dr. Clement Le Neve Foster, the Royal Inspector of Mines for that district, having been alluded to as authority, I attempted to verify this reference. In my collection of Dr. Foster's writings, which are everywhere recognized as among the most trustworthy and important contributions of the present generation to the science of mineral veins, I could find nothing to warrant this citation of him. Prof. Moissenet says in a footnote (p. 10): "Deposits of tin ore resembling pipe-veins occur at East Wheal Lovell, in Wendron, and were described in a paper read to the Royal Geological Society of Cornwall, in 1875, by Dr. C. Le Neve Foster." This paper does not bear out the conclusions sought to be drawn; and to make sure that there was not some other to which the reference might have applied, I wrote to Dr. Foster, and received from him several letters, setting forth his views on the veins of Cornwall with much clearness and force. I take the liberty of quoting a few sentences immediately concerning the point now under consideration:

"The paper referred to . . . was probably one I read about two years ago on East Lovell Mine. I send you a copy by this post. I have not used the term 'pipe-vein.' I merely called some of the ore-bodies 'pipes.' I have used the word 'pipe' to designate a long, narrow ore-body, a narrow *shoot* (or 'chute,' as

you write it) of ore, in fact. . . . All the 'pipes' at East Lovell are merely altered granite on the sides of fissures; and I am coming round to the opinion that most Cornish tin mines in granite are merely bands of altered rock. . . . The *carbonas* of Cornwall, which are supposed to correspond to *pipe-veins*, are merely altered granite. . . . The *carbona* is a mass of stanniferous schorl-rock formed by the alteration of granite. It is not a large chamber in the granite, subsequently filled by minerals. . . . I doubt whether the *carbonas* are the equivalent of the *pipe-veins*. I have never seen a true pipe-vein in limestone myself, so cannot speak authoritatively."

Having examined all the authorities cited by those who assert that pipe-veins, as hitherto known in literature, are independent ore-deposits, I am led to conclude that this view is not fairly deducible from anything that has been quoted in its favor. Whatever may have been anciently believed, it is now clear that the term pipe-vein applies only to an ore-body of a certain shape, which may be part of a fissure-vein, a bed, or a stockwork.

The question remains, whether this name should be revived, and applied, either (1), as some have proposed, to ore-deposits in which the ore has ascended "through pipes instead of fissures," or (2), as others have proposed, to fissure or other veins, in which elongated bodies of ore occur. To this I would say, in general reply, that the revival of an old name for a new thing is objectionable, and unnecessary. But there is no new thing presented. The three chief mines in the United States which have lately received this name at the hands of some are, the Emma in Utah, the Richmond in Nevada, and the Union at Cerro Gordo, California. Neither of these is a pipe-vein in the old sense, though each of them may contain, as subordinate interior features, a great many pipe-veins. It is much better to class them geologically as metalliferous beds, containing, if you please, pipes, chimneys, chambers, strings, and what not, of ore. A new name for this class of ore-deposits might indeed be convenient, not because they are not well known already, for the greater part of the lead product of the world is derived from just such deposits, but because the present names do not briefly and clearly define them. Yet the name of pipe-vein would be no relief. It might apply to one of the deposits of this class, by reason of the shape of the ore-bodies, and fail for the same reason to fit another deposit of the same class, or another part of the same deposit. The notion that ore-deposits exist, in which "pipes," apart from fissures, have been conduits for ascending solutions or sublimations, lacks proof.

The most mischievous result of such a nomenclature would be its legal effect, if our courts were not too wise to permit it to influence

their construction of the law. Title, under the United States Mining Law, is referred to the strike and dip of the veins claimed, and it is universally understood that the strike and dip must be taken at right angles to each other. But in the famous Eureka-Richmond Case, a distinguished advocate, himself a mining expert, arguing that the Richmond ore-body was a "pipe-vein," declared that the dip of such a body "is the inclination at which it enters the earth. When you follow the body of ore downward into the earth, you are following it on its dip. And you may call the direction at which it enters the earth by any name that you like; you cannot divest it of that name. That applies to it, no matter whether it be also the course or not." (Argument of Hon. Thomas Wren, p. 31.) This confusion of strike and dip would naturally result from applying the terms to a deposit, the horizontal section of which shows no principal, longest axis. It might be troublesome to ascertain the strike of a stockwork or mass. But nothing would give quite as much trouble as a "pipe," the dip of which, if taken by itself as an independent body, might be plausibly urged to be the same as its pitch—or, in plain words, "it dips wherever it goes." On the whole, therefore, it seems best not to erect such an ore-body into a new class. Let the "pipe" be an ore-body, and give to the deposit containing it and its associated bodies such a name as the facts will justify.

IRON MANUFACTURE IN MEXICO.

BY J. P. CARSON, NEW YORK CITY.

(Read at the Wilkes-Barre Meeting, May, 1877.)

THE works of the Tula Iron Company are in the Republic of Mexico, State of Jalisco, twenty-eight leagues southwest of Guadalajara, ten leagues northwest of the town of Sayula, through which passes the projected line of the Mexican National Railroad. Its geographical position would be about: latitude, 20° 10′ N., longitude, 4° 35′ W. of Mexico City. The surrounding country is a rolling plateau, 6000 feet above the sea, enjoying the most magnificent climate in the world, the average temperature being about 70°.

The works were commenced in 1850 by a company with very small capital, having not the least idea of the undertaking. They soon fell into the hands of the money-lenders, and after changing

owners three times, the works came, in 1870, into the possession of the present company, and have been in a manner rebuilt. As they were originally commenced without any fixed plan, and each successive owner has pulled down and rebuilt according to his fancy, the result is a number of old machines and sheds, huddled together in the most inconvenient manner, which have cost about four times as much as an entirely new establishment.

DESCRIPTION OF THE WORKS.

Water-power.—Being placed at the junction of two synclinal valleys, Atunajac on the north and Tapalpa on the south, the direct drainage of thirty square miles is partially received; and for a trifling amount expended in straightening and removing the obstructions of the various water-courses, the amount of water in the dryest season (the month of May), which is now 3.6 cubic feet per second, may be doubled. The rainy season commences in June and ends in October.

The present dam collects sufficient water to last until the end of April, or about ten months, more or less. This dam is of rubble masonry, built in form of an L, across the valley. It is 650 feet long and 20 feet high at the highest point. Here it is 7 feet at the base and 3½ feet at the top; the back vertical and the face with a batter of 2 inches to the foot, or the base is equal to 0.35 of the height. A wall of this height (20 feet), to be just equal in resistance to the pressure of the water, should be at least 8.4 feet, or 0.42 of the height. The numerous retaining-walls added at intervals of 30 feet protect it from overturning. The back-water extends half a mile; the average width is 600 feet.

The ground contiguous to the works is in the shape of a horseshoe. At the apex or top there is a basalt dike, 80 feet high, which being in the bed of the old stream, the water has eroded a deep ravine below, and caused the present topography. On one side is a water-tank, to be subsequently mentioned, on the other are the works.

The Furnaces.—In a deep excavation in the hillside, No. 1 furnace was built. Stack (brick), 28 feet high; bosh, 6 feet 5 inches, inclination, 50°; throat, 3 feet; hearth, 19 by 20 inches, rectangular; two tuyeres, 1½ inches and 17½ inches above hearth-line; cold blast; pressure, 1 pound.

The lining above the bosh is of refractory stone, said to have been in use thirteen years; the hearth is of stone. From the tuyeres to the bosh a composition is used, made of equal parts of clay, from a place called Capula, powdered stone, and powdered quartz. It gen-

erally lasts from four to six months. Blast is supplied by two double-acting wooden blowing cylinders, with clock valves; diameter, 3 feet; stroke, 7 feet. These also furnish blast for four bloomary fires and two smiths' forges. This machine is driven by a 30-feet overshot water-wheel, which gives about 46 per cent. of the power of the water used. This wheel drives also a small drill-press and turning lathe.

In front of furnace No. 1 is the foundry, 40 x 60 feet, arranged with suitable cranes and apparatus. To the right, in an excavated space, are two badly constructed cupolas and the exit gate. At the end is the carpenter shop, very small and crampy, beneath which is a storeroom for pig iron and billets. On the same level is the bloomary, twenty feet below the level of the foundry, to the left, which consists of four bloomary fires, two trip-hammers, operated by separate overshot water-wheels of 15 feet diameter. In the same building are also an old single-puddling furnace and nine-inch bar mill, both now worthless and abandoned. About fifteen feet to the left of the foundry and furnaces is a reservoir, 50 x 80 feet, which catches the water from the 30-feet water-wheel and delivers it to the water-wheels of the bloomary.

Furnace No. 2 is immediately behind or to the south of No. 1 about twenty feet, in a space excavated for the purpose. The stack was of cut stone, with ornamental cornices. It was erected in 1869. Two horizontal wooden blast cylinders, 4 x 7 feet, were geared to the above-mentioned 30-feet water-wheel. A Wasseralfingen stove was constructed to supply hot blast. An attempt to blow in was made, and after two weeks' severe labor a gas explosion destroyed the stove, the machinery was found ineffective, the work was abandoned, and the lining torn out. Such was the condition of the old works in 1870, which are said to have absorbed $400,000, without taking into consideration the hacienda, church, workmen's houses, and other improvements necessary for the existence of iron works.

THE NEW WORKS.

Blast furnace No. 2 has been reconstructed after plans furnished by Messrs. Taws & Hartman, of Philadelphia. Hearth (round), 3 feet 6 inches diameter; bosh, 9 feet; height, 35 feet; throat, 3 feet; two tuyeres, 3 inches diameter and 30 feet above the hearth-line.

It is lined from the mantle to the throat with the so-called refractory stone. This is a white magnesian silicious stone, which, when

first quarried, can be cut easily with a hatchet, but when dry it breaks. It is very heterogeneous in quality. Of several samples, apparently alike, some may be very refractory and the others utterly worthless. When gradually heated to the temperature of melting cast iron in a thoroughly clean bloomary fire, it swells, cracks, and glazes greenish, the interior being porcelain-white. At the end of an hour it melts to a pasty mass of dark-brown color. The trouble experienced with the fire-stone caused all the brick in the country to be tried, and those of San Pedro, near Guadalajara, were found to be the best, and although having to be packed thirty leagues on mule-back, were cheaper than the cut stone, and fully equal, if not superior, to it in quality. These brick are badly burned; on being heated they contract 20 per cent. of their length, warp, and crack. There is no quartz near San Pedro, so old brick and broken quartz were sent to be mixed with the clay, but as the brick are made by Indians, who tread the clay with bare feet and knead it by hand, they would only add quartz in fine powder, and claim that it is the only proper way to make good brick. Over four months were consumed before we could get a few experimental brick made, which were found to be an improvement on the old brick, but many months, or even years, will elapse before they will make what is wanted. It was finally decided to line the bosh and hearth with brick, 16 x 1 x 1½ inches, which is the size the Indians could make most readily.

As there was already on hand a supply of water sufficient to run a 30-feet overshot water-wheel, consuming seven cubic feet a second, for ten months in the year, it was considered far preferable in every way, and more economical, to use water-power than steam, provided that with the great fall near the works a turbine could be got guaranteed to do all the work and use only three and one-half cubic feet per second, in which case the old wheel, which was much out of repair, would be abandoned.

Acting on this view, one of the owners of the company, relying implicitly on the assurances and reputation of a well-known manufacturer of turbines in the United States, bought a horizontal turbine, of 18 inches diameter, to use as a motor. Two double-acting blowing cylinders, 3 feet diameter by 2 feet stroke, made by Naylor & Co., of Philadelphia, with shafting, journals, and patterns for the gearing, were bought and shipped. The housings, bed-plates, and cog-wheels (of brass) were made at the works. Twelve hundred cubic feet of air per minute, at 2½ to 3 pounds pressure per square

inch, and fifteen horse-power, were required by the furnace. The turbine was expected to make six hundred to seven hundred revolutions per minute, or twenty-four revolutions to one of the blowing pistons. Considerable doubts were entertained about the turbine, but from repeated assurances from the manufacturers that, with one hundred and fifteen feet fall, it would give thirty horse-power, or 80 per cent. of the power of the water used, and as all the machinery and fixtures were on the ground, it was decided to put it in. It was the intention to use a wooden or brick conduit for the blast, but as the distance was great, and it would have to be built over a stream and up a hillside at an inclination of 35°, a wrought-iron conduit-pipe, 20 inches in diameter, was sent for, which was shipped in sheets and riveted on the ground.

The blowing machinery was placed on a solid cut-stone foundation in the ravine, in line with the hot blast. The length of the conduit-pipe was 387 feet. It was provided with a suitable expansion joint, and properly secured to solid masonry pillars. A rubble-stone canal, 1000 feet long, capable of delivering nine cubic feet of water per second, was built from the dam, around the hillside, to a small reservoir, placed on the other side of the horseshoe, opposite the works. This reservoir, 60 x 90 x 3 feet, was intended to catch mud, and also to retain water for thirty minutes, in case of sudden stoppages. Cast-iron pipes, 12 inches in diameter, conveyed the water two hundred and fifty feet from the reservoir to the turbine, having a fall of one hundred and fifteen feet.

The season was so far advanced that little water could be obtained to make a thorough test of the machinery, but by filling the reservoir and noting the time it took to flow through the turbine, it was found that about seven to eight feet per second were used, and that the turbine gave very little power even then. The manufacturers now say it was only an experimental wheel, and they thought that it would work.

A modification of Kent's hot-blast stove, with twenty pipes, capable of heating 2000 cubic feet of air per minute up to 1000° F., a bell and hopper, drop-valves, and all of the most recent and improved fixtures from the United States completed the outfit of this furnace.

BAR-MILL.

This is placed on the hill on a level with the top of furnace No. 2, the waste gases from which will heat, as desired, both hot-blast

and boilers, which are also placed on the same level. The building is 150 x 40 feet and fifteen feet in the clear, roof of tiles, supported by heavy wooden trusses resting on brick pillars; only a portion of the sides are boarded in as a protection against rain. The end farthest from the blast furnace, or east end, is allotted to the puddling furnaces, there being space for six; one double furnace is completed. In the centre of the mill there is a one-ton steam-hammer, to shingle the puddle balls; it is from Ferris & Miles of Philadelphia, and works well. About midway of the building on the south side are the heating furnaces, one of which is in operation. Beyond the heating furnace is a three-high bar-mill, of the best workmanship, capable of making $2\frac{1}{2}$ inch bars, and all sizes of flats, $1\frac{1}{2}$ inch squares, and various sizes down to $\frac{5}{16}$ round. A set of puddle-rolls is provided and an over-head railroad connects them with the steam-hammer and puddling-furnaces. The mill is driven by a twenty-inch leather belt from the fly-wheel of the engine, which is in a brick room on the north side of the building, opposite the heating furnaces. The engine is one hundred horse-power, from Mackintosh, Hemphill & Co., of Pittsburgh. It rests on a solid cut-stone foundation, and is a particularly well-built and smooth-working machine. There are two boilers of the best Pennsylvania charcoal iron, 42 inches diameter by 45 feet long; they have been tested to 150 pounds hydraulic pressure, or double the working pressure allowed. They are provided with both injector and steam-pump; the pump is usually worked and the injector kept for accidents; a little water is always kept running from one of the cocks so that the fireman may know that the boilers are full. A steam-pump and shears are very much needed to complete the equipment.

The mill has been constructed to work towards the blast furnace, or west, where there is but little space; it should have been made to deliver at the east end where there is ample room.

FOUNDRY.

This requires no special description; castings are generally made direct from the blast furnace, but when the latter is not in blast the cupolas are used; these are badly constructed and insufficiently supplied with blast, and as much as sixteen hours have been consumed in getting a single heat from them. The fly-wheel of the engine, fourteen feet in diameter, and weighing over four tons was cast in a

single piece direct from the blast furnace, as were also the bed-plates of the engine and blowing machinery, and various heavy castings of the hot-blast. Every description of castings can be made from five pounds up to four tons, but they have no experience in making castings as thin as a quarter of an inch. Castings are generally made in the evening and removed in the morning. It seems to be a fixed custom to immediately remove the top covering as soon as the iron solidifies, and allow the top to cool, so the piece frequently warps and is generally so hard that it is difficult to cut with either file or cold-chisel. The workmen are specially skilful in making baluster railings, ornamental rustic chairs, and sugar-boilers; of this class of work few foundries of the United States or Europe can make neater or cleaner castings.

TOOLS, ETC.

There are several smith's forges scattered around, well supplied with tools, and a lathe and drill-press, in bad condition, driven by water-power. The carpenter shops, of which there are two, are fairly furnished, but no seasoned lumber is ever kept on hand even to make patterns; in fact only a few boards are brought on mule-back, from time to time, from the saw-mill fifteen miles distant, as necessity demands. There was but one good monkey-wrench, after which boys were kept in perpetual pursuit. The shovels were of wood, and there was a general deficiency of picks, axes, and other small but absolutely necessary tools. Tramways with hand-cars should be substituted for the barbarous and expensive system of packing loads on men's backs; but the most deep-seated and yet cunning prejudices exist against all labor-saving devices.

ORE SUPPLY.

The District of Tula—The nucleus of the hills is greenstone, generally overlaid by a thin seam of a shaly disjointed sand-rock, the joints of which are highly discolored by oxide of iron. In some places may be observed a layer of stone, which, from its position and character, has evidently been formed from the disintegration of the greenstone, and subsequently cemented.

Amole Mine—This is situated on the side of a ravine two and a half miles from the works; it is the only mine in the district, but from the occurrence of iron outcrops in various places, others will probably be found and opened up with advantage. On one side of it is a trap

dike, on the other side the disjointed stone, and lower down the ravine the cemented stone. It is worked by an open cut extending horizontally seventy-five feet into the hill. So far it is only a pocket, but from the indications of float rock above, a small drift would possibly soon disclose a vein parallel with the dike. The ore and waste (the latter being thrown into the ravine) are packed on men's backs. A mine car is very much needed, since the farther the open cut penetrates the hill the more will be the waste and the greater the distance it will have to be carried. The ore occurs in bunches, and is very variable, passing from a limonite to a crystalline specular hematite and a micaceous hematite, the one verging into the other without any apparent regularity; it is broken and hand-picked at the mine. The gangue is clay mixed with decomposed hornblende. This ore is very unpopular with the furnacemen; the micaceous ore they call *plumbacina* (graphite) and throw away as worthless. The following are the analyses of two samples of the limonites, such as they prefer to work, made by Kenneth Robertson, E. M., of Easton, Pennsylvania:

	(1)	(2)
Silica,	29.33	27.60
Water,	2.19	6.21
Alumina,	1.16	2.10
Phosphoric acid,	0.21	0.46
Sesquioxide of iron,	63.74	63.38
Protoxide of iron,	2.56	
Lime,	0.56	0.25
Magnesia,	0.25	0.10
	100.00	100.00
Metallic iron,	46.68	44 36
Phosphorus,	0.092	0.20

The cost of mining is \$0.9⅜ per carga of 300 pounds or \$0.62½ per ton; transportation to works \$0.12½ per carga or \$0.83⅓ per ton; or total cost of one ton of 2000 pounds delivered at the works \$1.46.

The Mineral District of Chiquilistlan.—This is twenty miles west of the works and is of very interesting character. The formation is limestone (probably Tertiary), greatly upheaved by volcanic action, and penetrated in various directions by trap dikes. The general trend is northeast by southwest. Comparatively near together are mines of iron, copper (both oxides and pyrites), silver, lead, coal, and, I am told, also, tin and graphite. Here, also, is the once famous cinnabar mine of La Manta, which caused the town to be a quite

important place. It was worked by the Spaniards, who only employed prisoners, and it is said that any man who survived six months' work was given his freedom. The mine is now abandoned, but with machinery could easily be opened. The large excavations, and a pile of over ten thousand tons of *débris*, attest the extent of the operations. A little mercury is distilled in Canteras, from a hydraulic washing in the neighborhood. There is an abundance of wood and water near this mine.

Tacotes Mine.—This is the principal iron mine of the works, from which it is twenty-one miles distant, the transportation being effected as usual by pack-mules. It is situated in the southern portion of the district, on the side of a steep hill, about eight hundred feet above a ravine. The vein is what is termed segregated, occupying a space between parallel seams of limestone. Its outcrop may be distinctly traced from the top of the hill to near the bottom of the ravine, and I am told that it also extends to the other side of the hill, but that has not been proved. Half-way up the hill it is worked by an open cut, which now extends horizontally inward about two hundreed feet by eighty feet wide, and exposes six seams of ore of an aggregate thickness of fifty to sixty feet. A little powder is occasionally used for blasting. The chief labor is in disposing of the waste, which is packed on men's backs, in raw-hide sacks, and dumped in the ravine. The natural way to work the mine would seem to be in benches or steps, using chutes and mine cars to carry off the waste to two small ravines which exist conveniently on either side of the vein, and down which water continually flows. The cost of exploration would thus be diminished and the yield be increased to any desired extent.

The present cost of mining is $4\frac{1}{4}$ cents per carga, or $28\frac{4}{10}$ cents per ton; transportation to works, $37\frac{1}{2}$ cents per carga, or $2.50 per ton. Total cost per ton at the works, $2.78\frac{4}{10}$.

The gangue is clay, with very hard silicious nodules of iron ore. The following are the analyses of the various seams, made by the above-mentioned chemist:

	No. 1. Espranza.	No. 2. San Antonio.	No. 3. El Coro.	No. 4. San Filipe.	No. 5. Bartolina.	No. 7. De Labor.	Mean of these six analyses.
Silica	1.14	1.70	2.81	2.49	9.50	4.72	3.73
Water	0.90	1.16	0.55	....	0 80	5.69	1.43
Alumina	0.76	0.58	2 36	2 18	2.03	1.20	1.52
Phosphoric acid	0.39	0.06	0 21	0.14	trace.	0.47	0.21
Sesquioxide of iron	95.97	95.97	69.68	94.80	64.89	86.67	84.58
Protoxide of iron	.....	.....	22.68	.....	22.68	.....	7.56
Sesquioxide of manganese	.....	.....	.....	.....	.....	0.52	0.09
Lime	0.32	0.27	0.28	0.28	0.20	0.48	0.30
Magnesia	0.52	0.26	1.43	0.11	0.90	0.25	0.58
	100.00	100.00	100.00	100.00	100.00	100.00	100.00
Metallic iron	67.18	67.18	66.44	66.36	62.73	60.67	65.09
Phosphorus	0.17	0.026	0.092	0.06	.....	0.20	0.092

These ores, from No. 1 to No. 4, are brown hematites; No. 5 is occasionally crystalline, and makes excellent fettling for the puddling furnaces; No. 7 is extensively sold to the numerous Catalan forges in the neighborhood, or exchanged for other ores that the forgemen dislike to work.

La Mora Mine.—This is nine miles north of Tacotes, in a similar formation to the last, but more irregular. It has been worked from the time of the Spaniards, and extends about three hundred feet under ground in various directions. The ore has not been *mined*, but dug out. Several crosses are placed at the entrance of the mine, to encourage the miner and insure him of safety. It is now only worked to a limited extent, to mix with other ores. It is much sought after by the Catalan-forgemen, and the blast-furnacemen consider it almost impossible to work without it. The following analysis does not indicate any important difference from the other ores. It must, therefore, owe its good qualities to its molecular condition:

Silica,	8.24
Alumina,	2.88
Phosphoric acid,	0.37
Sesquioxide of iron,	68.61
Protoxide of iron,	22.73
Oxide of manganese,	0 52
Lime,	0.34
Magnesia,	1.31
	100.00
Metallic Iron,	65.72
Phosphorus,	0.16

It costs to mine, 16 cents per carga, or $1.15 per ton; transporta-

tion, 43⅓ cents per carga, or $2.92 per ton. Total cost at the works, $4.07 per ton.

Las Animas Mine.—This is also a segregated vein in limestone, four miles west of La Mora mine. The outcrop can be traced without difficulty for over a thousand feet. The vein is well defined and regular, varying from three to five feet in thickness. It has been but recently opened and the exploitation is done in a very workmanlike manner. The property is not owned by the company, but the ore is exchanged for that of Tacotes and delivered at the works for the same price. The forgemen do not like it. In the blast furnace it works well and makes a very fine-grained and very tough iron, which has not yet been analyzed. Within half a mile of this mine occur several pockets of cinnabar, that have been worked from time to time for the last two hundred years, yielding from one to five per cent of mercury.

COAL.

On the northern edge of this district, eight miles northeast of La Mora, occurs an outcrop of coal, occupying seams of limestone and shale, the latter being in contact with the volcanic rock. There are four distinct seams of bituminous coal, dipping conformably with the limestone, varying in thickness from eighteen inches to three feet. A shaft thirty feet deep on the largest, discloses a seam of bituminous shale interstratified with small seams of bituminous coal, with conchoidal fracture, bright surface, and very pyritiferous. When slightly heated it will burn with a bright flame. Before the blow-pipe it cakes and gives off a strong empyreumatic odor. It may be valuable some day for steam purposes, but will never be useful metallurgically, and is probably a deposit that would not pay for prospecting.

LIMESTONE.

This occurs in an inexhaustible bed nine miles south of the works, in a prolongation of the Chiquilistlan formation. It is delivered, calcined, at 75 cents per carga, or $5.00 per ton. The raw stone can be delivered at $1.40 per ton, but the calcined stone is used in the furnace because they are used to it, although the saving in fuel is inconsiderable.

The following is the analysis of the calcined stone, and calculated analysis of the raw stone:

	Calcined.	Raw.
Silica,	1.96	1.48
Alumina and oxide of iron,	2.59	1.95
Lime,	70.43	53.12
Magnesia,	1.08	0.82
Carbonic acid,	23.94	42.63
	100.00	100.00

FUEL.

The company owns six and a half square leagues, or thirty-six thousand acres of land surrounding the works, one-half of which is already cleared; but for twenty leagues around the mountains are covered with a magnificent forest of oak and pine, and several valuable leases or privileges are held for cutting timber at the most accessible points. The wood is burnt in piles containing about ten cords (one cord equal to one hundred and twenty-eight cubic feet), and yields charcoal of the best quality, weighing seventeen to twenty pounds per bushel, of two thousand seven hundred and forty-seven cubic inches.

The charcoal-burners are Indians, who work by contract. To avoid hauling or packing the wood they build their piles where the wood falls. They are always very small; sometimes many are built about one hundred feet apart, with only one man to attend them all. During a windy day, which frequently occurs, some are necessarily neglected. It is useless to try to persuade them that this system is very wasteful, and that experience elsewhere has shown, that it is far more economical in labor and yield of coal to haul wood and burn it in kilns, or at least in piles containing thirty or forty cords. The charcoal is delivered in sacks, weighing one hundred to one hundred and twenty pounds, including waste, at twenty-three cents a sack, or about four cents a bushel.

The coal should be forked, all brands, waste, and stones rejected, and be paid for either by weight or by measure; but this is never done, being contrary to the "costumbus del pais."

COST PER TON (2000 LBS.) OF PIG IRON.

Roasting and Breaking.—The ores from the mines of Tacotes, Las Animas, and Amole are roasted in piles, with wood and charcoal braize, and then broken by hand, whether they have been fused or not, to the size of a walnut; about five per cent. is lost in this operation as waste.

Cost of roasting per ton,	$0 40
" breaking "	0.20

Charges of Furnace No. 1.

Tacotes,	1.5 boxes = 118 lbs.	
Amole,	0.5 " = 33 "	
La Mora,	0.5 " = 33 "	
		184 lbs.
Charcoal,	4 baskets = 165 "	
Calcined limestone,	½ shovel =	2.06 lbs.

Number of charges a day, 50 to 60; yield of iron, about 55 per cent.; loss of iron in slag, 7 per cent.; average production per day, 3 tons; charcoal consumed per ton of iron, 3228 pounds. In addition, about 20 bushels are consumed at the tymp (no clay or sand stopper being used), from which rises a bright flame two or three feet high, similar to that of the Catalan forges, as worked by the Indians in the neighborhood.

Cost of Material per Ton of Iron.

Tacotes	ore roasted and broken,	1.15 tons	@ $3.38,	$3.89
Amole	" " " "	0.33 "	@ 1.35,	0.44
La Mora,	" " " "	0.33 "	@ 4.27,	1.41
Lime, 41 lbs.,			@ ¼ cent,	0.10
Charcoal, 180 bus.,			@ 4 "	7.20
Total cost of material,				$13.04

Cost of Labor per Ton of Iron.

First keeper,	$1.25	per day	
Second "	1.12½	"	
2 helpers, @ 50 cents,	1.00	"	
4 fillers, @ 37½ "	1 50	"	
Total for labor,	$4.87½	" for 3 tons, or per ton,	$1.62
Superintendence, repairs, etc.,			2.50
Total cost per ton,			$17.16

Cost per Ton of Iron Refined in Bloomary and Hammered into Billets.

Labor of melter per quintal,	$0.43¾	
" hammerman "	0.30 — $0.73¾, or per ton,	$14.75
Fuel, 6000 lbs. charcoal, or 333 bus.,	@ 0.04,	13.33
Iron,	1.25 tons @ 17.16,	21.45
Repairs, superintendence, and foremen,		2.50
Total cost per ton of billets,		$52.03

Loss of iron, from 15 to 35 per cent.

The hammermen are paid for other pieces as follows:

Shafts, per quintal,	$1.00
Cart axles, "	.50

Cost of One Ton of Puddled Bar Iron, Shingled by Steam Hammer.

This estimate is based on the few weeks' work of the double puddling furnace.

1.05 tons of pig iron @ $17.16,	$18.02
Packing " " top of hill to the furnace,	.45
7 cartloads of wood (388 cubic feet) @ 75 cents,	5.25
Labor, per ton,	3 50
Shingling, "	.60
Roughing rolls,	2.50
Engine-drivers, steam, etc.,	1.18
Superintendence, repairs, and foremen,	2.50
Cost per ton of puddle bar,	$34.00

Capacity of furnace, 2 to 2.5 tons per day.

Cost of One Ton of Ordinary Bar Iron, Rolled from Billets.

1.045 tons of billets @ $52.03,	$54.36
Packing from bloomary to mill,	1.04
Heating (labor),	1.00
Heating (fuel, 6 cartloads wood, 334 cubic feet, @ 95 cents),	4 50
Rolling, straightening, etc.,	5.00
Engine-driver and firemen,	.68
Fuel for engine,	.50
Superintendence, repairs, and foremen,	2 50
Total cost per ton of bars,	$69.58

Average rolled per day, 5 tons; maximum, 7 tons.

Cost of One Ton of Ordinary Bar Iron, Rolled from Puddle Bar.

1.045 tons puddle bar, @ $34.00,	$35.53
Heating, rolling, etc.,	14.18
	$49.71

From the notes of Mr. Michael O'Neil, an experienced puddler from Bethlehem, Pennsylvania, I gather the following, which is added as an interesting description of the condition of the works. He found the small puddling furnace choked up and that it had been used for melting brass. After making proper repairs, using the refractory stone of the country, which he was assured was "perfectly infusible," it was started. The charges were first 350 pounds of iron, and, finally, 450 pounds; the iron melted in three quarters

of an hour, and each heat lasted about an hour and a half; here a heat usually takes from two to two and a quarter hours. The iron was very dry, but with plenty of good dry wood it worked perfectly. Balls of only 80 to 100 pounds were made, and shingled under a small trip-hammer of two and a half inch face. After every two or three heats, delays occurred on account of portions of the roof and stack melting down, which would have to be removed. Two entire new roofs of the "refractory" stone were built from Nov. 1st to Jan. 31st, when so much of the stack fell that it was deemed useless to repair it, and puddling was postponed for a time.

The time from February until May was consumed in building the heating furnace. The refractory stone was again used, the roof was twelve inches thick, and would last about three weeks, single turn, but the chimney, after three days, melted so much as to entirely fill the take-up and stop operations; it was then lined with fire-brick, and has worked well ever since. The charge was 800 to 1200 pounds, according to the size of the billets, and took three-quarters of an hour to heat.

The double-puddling furnace was commenced in May, and completed about the middle of August. Here numerous drawbacks again occurred; from the contraction of the fire-brick; the bridge wall fell, damaging a portion of the fire-chamber. The wood was so wet that even though dried in strips on hot iron plates, it would scarcely burn, so that the grate-bars had to be altered to allow the addition of charcoal. The hands were green, and from their little knowledge previously gained at the small furnace, were very conceited and impertinent, considering themselves teachers rather than learners. The charges were 900 pounds, and six heats were made in eleven hours; the iron hammered under the steam-hammer, worked well, and was of fair quality. Work continued about two weeks, when fifteen feet of the stack fell on account of the contraction of the fire-brick, a portion being constructed of key-brick; the work was then stopped.

Mr. O'Neil's contract expiring at this time he came home, after having taught them all he could in a year. It is much to be regretted that they did not learn more, or rather that they concluded that they had learned everything, and allowed him to return so soon. His salary, travelling expenses and maintenance, amounted to about $4000. One may judge of the cost of this experiment, which may be taken as a type of the cost and difficulty of introducing new things into this country. We refrain from estimating the cost per

ton of the iron he did puddle, but will mention the quality of that puddled in the small single furnace.

The usual Mexican test is to hammer a rod cold into a nail: this it stood perfectly. Specimens of this iron were exhibited at the Centennial Exhibition, and tested on Riehle's testing machine. The tensile strength per square inch was as follows: 53,880 pounds; 54,060 pounds; 54,700 pounds; 58,930 pounds; 58,590 pounds. The qualities of this iron are magnificent. Even with the present rude manufacture, it fully equals the special brands of European and American iron, manufactured with the greatest care and skill.

PRESENT PRODUCTION OF THE WORKS.

Active operations are carried on from the first of July to the first of May, ten months, or while the supply of water lasts. During this period the furnace is in blast about two hundred days, producing about 400 tons of pig iron and castings. The bloomary fires are active, off and on, all the time; but from stoppages on Sundays, Saint's days, and break-downs, they may be said to average three and a half weeks' actual work during the month, or thirty-five weeks for the year. Each bloomary produces 3 tons of billets a week, with a loss of iron of about 25 per cent. These three bloomaries, during the year, produced 315 tons of billets and consumed 394 tons of pig iron. The loss of heating and rolling billets into bar iron is 4½ per cent., leaving a yield of 301 tons of bar iron. Castings are made direct from the blast furnace at a cost for patterns and moulding of three-quarters of a cent. per pound, or $15 per ton; whence we have—

	Dr.	Cr.
To 206 tons of castings @ $32.16, . .	$6,624.96	
" 301 tons bar iron @ $69.58, . . .	20,843.58	
By 507 tons @ 10 cts. pr pound, or $200 per ton, . . .		$101,400.00
Balance in favor, .	$73,931.46	
	$101,400.00 .	$101,400.00

ESTIMATED PRODUCTION OF THE WORKS WHEN COMPLETED AND IN GOOD RUNNING ORDER.

We will assume that all the production is from furnace No. 2, the puddling furnaces and rolling mill, though for four months in the year, when there is an excess of water, furnace No. 1 and the bloomaries might be employed.

Assuming furnace No. 2 to be worked under the same conditions

as furnace No. 1 as regards ore, fuel, and labor, and that it produces ten tons of pig iron daily, the price of labor per ton will be reduced to $1.13, and it will then cost $16.03.

Supposing the furnace in blast 200 days per year at 10 tons per day,—2000 tons; of this is sold as castings, 500 tons, leaving to be puddled and rolled into bar iron, 1500 tons. Assume that the mill works 250 days a year, and each double-puddling furnace only produces 2 tons per day, or 500 tons per annum, then three puddling furnaces (allow one more for accidents), and two reheating furnaces will do the work. We have then as the production of the works the following:

	Dr.	Cr.
To 500 tons castings @ $31.02, . .	$15,515.00	
" 1876 tons bar iron, $49.71, . .	68,400.96	
By 1876 tons @ 8 cts. pr. pound, or $160 pr. ton, . . .		$299,160.00
Balance in favor, .	$215,244.04	
	$299,160.00 . .	$299,160.00

Such is the condition of the manufacture of iron in this portion of Mexico, and it may be taken as a type of its manufacture in other parts of the republic.

It is obvious that the works were badly located in the beginning, and it is a question whether it would not have been more judicious, instead of adding to their new improvements, to have built an entirely new concern at the Tacotes Mine, using steam-power entirely.

While the large furnace is in full blast the daily transportation of 15 tons of ore from the Tacotes Mine, will require 210 mules and 35 mounted drivers, a day being allowed them to return. A wagon road will have to be constructed: then 6 wagons, 72 mules, and 12 drivers will do the work. Still these works possess advantages that few enjoy, and were their resources properly developed, they would make iron cheaper than anywhere in the world. They have the richest and purest of ores, that produce an iron only surpassed by the best from Sweden, abundance of cheap fuel, and superabundance of cheap labor. This last, however, is not an unalloyed blessing, for double the necessary number, and a host of decrepit old foremen are employed, and the "compadre" system all-powerfully reigns.

The market for the iron extends throughout the States of Colima, Michoacan, Jalisco, and Zacatecas; covering an area of more than 100,000 square miles of the richest and most enterprising part of the republic, and the works always have more orders than they can fill, at prices ranging from eight cents to ten cents per pound. There is a

slight competition from foreign iron in the towns near the coast, but as this has paid excessive duties and costs of transportation, it can be easily excluded by the really superior Tula iron, which can always undersell it.

There are many Catalan forges in the neighborhood operated by Indians, who eke out a meagre existence by selling, at three cents per pound, the plow-shares, axes, and billets they produce, to the shop-keepers, who advance them food. This manufacture does not amount to a competition; but a well-organized lot of forges throughout the country, and portable steam-engine and hammer to make nail-rods, which would require but very small capital, could offer very serious competition.

In the face of numerous difficulties, and after the expenditure of immense sums of money and indomitable energy and pluck, Tula has been established, and fully contributed its share to the advancement of the independence and civilization of the country.

THE ACTION OF SMALL SPHERES OF SOLIDS IN ASCENDING CURRENTS OF FLUIDS, AND IN FLUIDS AT REST.

BY J. C. BARTLETT, A.M., CAMBRIDGE, MASS.

(Read at the Wilkes-Barre Meeting, May, 1877.)

THE following discussion was suggested by an experiment of Mr. Krom, the manufacturer of air-jigs, to illustrate the superiority of air over water as a medium of concentration. The paper is written in the interest of no system of concentration, but simply to test the experiment, and, perchance, to add something to the general fund of information on the subject.

To speak of testing an experiment by a theoretical discussion, may seem a misuse of terms, but the theories concerning falling bodies and the resistance of fluids are pretty well crystallized into laws, which may properly be used to show where experiments which seem to refute them were improperly performed, and that instead of refuting they only corroborate.

It is well known that a sphere of galena $\frac{1}{8}$ inch in diameter, and a sphere of quartz $\frac{1}{2}$ inch in diameter, are equal falling in water; that is, these two spheres, being placed together in a column of water at rest or in motion, will practically remain together, falling or rising together, or remaining in suspension. Mr. Krom, to show that these

spheres could be separated in a current of air, and hence, as he supposes, to show that air is a better medium for separation than water, performed the following experiment. He says: "I erected two glass tubes, each two inches in diameter, and eight feet high. One of these tubes I filled with water, through the other I forced a regulated blast of air. I found that, practically, as above stated, $\frac{1}{8}$ inch globule of galena, and 4-8 inch globule of quartz fall in equal times in the column of water. But when the blast of air was regulated to retard the galena in falling to the same extent as water, then the 4-8 of quartz was sustained by the blast of air, and did not fall, while the galena fell as rapidly as in the tube of water."

It is a very remarkable coincidence that the quartz ball should be exactly held in suspension, and the galena ball should be caused to fall in exactly the same time as in water by the same blast of air. It might be supposed that the quartz ball, the two balls being transferred from water to air, losing so much more sustaining force due to the buoyancy of the water than the galena, would tend to fall faster than the galena ball, and hence that a blast of air which held the former in suspension would cause the latter to rise. On the other hand, the sustaining force due to the velocity of the air would be much greater in the case of the quartz than the galena, so that a blast of air which would hold the former in suspension might allow the latter to fall. What the actual result would be, can only be determined by a consideration of all the conditions together, and will appear from the following investigation.

In Rittinger's treatise on *Ore Dressing*, the following formulæ are deduced for spherical solids in a rising stream of water. They are equally true for any other fluid, if we make the proper change in A and B for difference of density:

$$(1)\ v = \frac{A^2C^2 - 1}{A\left[\frac{\epsilon^{2Bt} + 1}{\epsilon^{2Bt} - 1} + AC\right]}$$

$$(2)\ s = \frac{AC + 1}{A}t - \frac{1}{AB}\log\frac{(AC + 1)\epsilon^{2Bt} - (AC - 1)}{2}$$

In (2) the logarithm is the Napierian; C is the velocity of the ascending current of fluid, v the velocity of the sphere at the end of

t seconds, s the distance upwards passed over by the sphere in t seconds,

$$A = \sqrt{\frac{3a\triangle}{2d\gamma(\delta - \triangle)}} \qquad B = \frac{g(\delta - \triangle)}{\delta}A.$$

In these values of A and B, $a = 25.5$, a constant determined by theory, and verified by experiment, being the force in kilograms exerted on a surface one meter square by water flowing directly against it with the velocity of one meter per second; $\triangle$ is the density of the fluid, δ the density of the sphere, γ is 1000, the weight in kilograms of one cubic meter of water; g is the acceleration due to gravity, or 9.809 meters; d is the diameter of the sphere in meters, and ϵ is the Napierian base, or 2.71828. The reproduction of these formulæ is somewhat lengthy, though not difficult, and will, therefore, not be given here. The reader who wishes to satisfy himself as to their correctness is referred to the above-mentioned work. From them simpler formulæ for special cases will be deduced. The contraction log. indicates the Napierian logarithm.

If in (1) $C = 0$, or the fluid is at rest, we obtain

$$(3)\quad v = -\frac{1}{A}\frac{\epsilon^{2Bt} - 1}{\epsilon^{2Bt} + 1},$$

and if 1 is very small compared with ϵ^{2Bt}, we obtain from this

$$(4)\quad v = -\frac{1}{A}$$

If in (1) 1 may be neglected in comparison with ϵ^{2Bt}, we obtain

$$(5)\quad v = C - \frac{1}{A}.$$

If in (1) $v = 0$, or the sphere is held in suspension in the fluid, we have

$$(6)\quad C = \frac{1}{A}.$$

If C is greater than $\frac{1}{A}$, v is positive, and the sphere rises. If C is less than $\frac{1}{A}$, v is negative, and the sphere falls. If in (2) $C = 0$, we obtain

$$(7)\quad s = -\frac{1}{AB}\log\frac{\epsilon^{Bt} + \epsilon^{-Bt}}{2}.$$

If we solve this for t, we get

$$(8)\quad t = \frac{\log\left(\epsilon^{-sAB} + \sqrt{\epsilon^{-2sAB} - 1}\right)}{B}.$$

If in (8) 1 may be neglected in comparison with ε^{-2sAB}, which is generally the case in practice, s being negative when $C = 0$, we obtain

$$(9)\ t = -\frac{\log 2}{B} - sA.$$

If in (2) we neglect $AC - 1$, which is generally small compared with $(AC + 1)\varepsilon^{2Bt}$, and solve for t, we get

$$(10)\ t = \frac{\log.\left\{\frac{AC+1}{2}\right\} + sAB}{B(AC-1)}$$

and if in (10) $C = 0$, it reduces to (9). By approximations (2) may be reduced to

$$(11)\ s = \left\{C - \frac{1}{A}\right\} t,$$

or, for those cases where the velocity of the sphere may be regarded as constant, we may write $s = vt$, and take the value of v from (5), thus obtaining (11).

For small spheres falling or rising in water, all the approximate formulæ are accurate enough, but not always so when the fluid is air, and they must be used with caution. In the consideration of particular cases, we shall see to what extent the approximate formulæ are trustworthy. For the sake of clearness and brevity, the discussion is put in the form of problem and answer, all the work of computation being omitted. In the following cases the densities of water, air, quartz, and galena are taken as 1, 0.00125, 2.6, and 7.5 respectively.

I. What must be the velocity of an ascending current of air to keep in suspension a quartz ball $\frac{1}{2}$ inch in diameter? From (6) we find $C = 86.2$ feet per second.

II. What will be the action of a galena ball $\frac{1}{8}$ inch in diameter in an ascending current of air having a velocity of 86.2 feet per second? For the galena ball the value of $\frac{1}{A}$ is 73.21; hence C is greater than $\frac{1}{A}$ and the galena will rise with an increasing velocity, the limit of which is $C - \frac{1}{A}$ or 13 feet per second.

III. In what time will a ball of galena $\frac{1}{8}$ inch in diameter fall 8 feet in water at rest? From (11) we get $t = 3.32$, and from the more exact formula (9) $t = 3.38$. As in this case $-2sAB = 76.8$, we see that 1 may be omitted under the radical sign in (8), and (9) may be used without appreciable error. By applying (9) to the case

of a quartz ball ½ inch in diameter falling with the galena, we find $t = 3.43$, a difference of 0.05 second. A part of this difference is due to the fact that the two balls are not exactly equal-falling theoretically, the ratio of the diameters of equal-falling spheres of quartz and galena being 4.0625 : 1, and not 4 : 1 as assumed. If we substitute the ratio 4.0625 : 1, we get $t = 3.40$ instead of 3.43. The rest of the slight difference is easily accounted for by explaining the meaning of equal-falling bodies. Two equal-falling bodies are not necessarily two bodies which fall from rest through the same distance in the same time; but they are two bodies such that the limit of the velocity which they acquire by falling from rest in any fluid is the same for both. This limit of velocity is found by making t infinite in (1), and is $C - \frac{1}{A}$ or $-\frac{1}{A}$ if $C = 0$. To illustrate this point with another example, it may be asked:

IV. What will be the velocity of an ascending current of water to keep in suspension a ⅛ inch galena ball, and what will be the action of a ½ inch quartz ball in this stream of water? From (6) we find that the velocity is 2.41 feet per second, and from (5) we find that the quartz ball would rise, its maximum velocity being 0.0187 foot per second. Practically, of course, they would remain together. If we reverse the problem, asking the velocity necessary to keep the quartz ball in suspension, we find 2.39 feet per second, and that the galena will fall with a maximum velocity of 0.0187 foot per second.

V. What will be the velocity of an ascending current of air to keep a ⅛ inch galena ball in suspension, and what will be the action of a ½ inch quartz ball in this current? By (6) we get as before 73.21 feet, and if we substitute this value in the exact formula (1) with the proper value of A, we find:

When $t = \frac{1}{2}$ $v = -3.83$.
When $t = 1$ $v = -6.57$.
When $t = 2$ $v = -9.82$.
When $t = 4$ $v = -12.28$.

The limit which v continually approaches, and practically reaches after a few seconds, is -12.98. This illustrates how soon, even in air, the velocity of small spheres becomes practically constant.

VI. What will be the diameter of a galena ball which will be held in suspension by an ascending current of air which will sustain a quartz ball ½ inch in diameter, that is, having a velocity of 86.2

feet per second? Solving (6) for d, which is contained in A, we get $d = 1.386$ eighths of an inch.

VII. What is the diameter of a galena ball which, in an ascending current of air which keeps a quartz ball $\frac{1}{2}$ inch in diameter in suspension, will fall with the same velocity as in water at rest? If we assume that the velocity has become practically constant, we may employ (5) to solve the problem. For the galena falling in water at rest we have $v = -\frac{1}{A}$, which may be written $-\frac{1}{A_w}$, the subscript w denoting that A is taken with reference to water. In the same way we shall have A_a for A taken with reference to air. Hence (5) will become $-\frac{1}{A_w} = C - \frac{1}{A_a}$ or $\frac{1}{A_a} - \frac{1}{A_w} = C$. Solving this for d, which is contained in A_a and A_w, we get $d = 1.48$ eighths of an inch.

VIII. What is the diameter of a galena ball which, in an ascending current of air which keeps a $\frac{1}{2}$ inch quartz ball in suspension, will fall from rest through 8 feet in the same time it would fall 8 feet in water at rest? Formula (2) is the one to apply to this question, A and B being functions of the required diameter, and s, C, and t, being given: $s = 8$ feet, $C = 86.2$ feet, $t = 3.38$ seconds. In this case $AC - 1$ may be neglected, and we may employ (10). Though we cannot solve this last question directly for d, we may find the value of d by approximations, starting with the value obtained in the preceding question.

Solving for s, we have

$$(12) \quad s = \left\{ C - \frac{1}{A} \right\} t - \frac{1}{AB} \log \left\{ \frac{AC \times 1}{2} \right\}$$

In this the value d, 1.52 eighths of an inch, gives $s = 7.996$, instead of 8 feet as given in the data. This answer, 1.52 eighths inch, is practically the same as that found in the preceding question, 1.48 eighths inch. The difference between the two questions should be noticed, and the reason why d should have a little larger value in the latter will be understood upon a moment's reflection.

IX. What will be the velocity of an ascending current of air in order that in it a $\frac{1}{8}$ inch galena ball shall fall 8 feet in the same time as in water at rest? Taking formula (12) and substituting the known values of A, B, t, and s, we find $C = 69.62$ feet.

X. In what time will a $\frac{1}{2}$ inch quartz ball fall 8 feet in an ascend-

ing current of air, having a velocity of 69.62 feet per second? From (10) we obtain $t = 0.9209$, or nearly one second.

XI. Compare the velocities of spheres of galena and quartz falling in an ascending current of air having the velocity of 20 meters per second, the spheres being equal-falling in water, the galena having a diameter of 4 mm., and the quartz 16¼ mm. From (1) we find:

For $t = 1$ $v = -2.606$ m. for galena, $v = -4.263$ m. for quartz.
For $t = 2$ $v = -3.901$ m. " $v = -6.761$ m. "
For $t = 4$ $v = -4.801$ m. " $v = -8.899$ m. "

The limit of the velocity of the galena is -5.045, and for the quartz -9.714.

To sum up the results thus far, we see that the velocity of an ascending current of air to keep a ½ inch quartz ball in suspension is 86.2 feet per second, and that in this current a ½ inch galena ball will rise with an increasing velocity which never exceeds 13 feet per second. We also find that the galena would fall 8 feet in still water in 3.38 seconds, and that, practically, the quartz ball would fall in the same time, being only 0.05 of a second behind. We see that practically the quartz and galena are equal-falling, that they remain together in a column of water, whether at rest or in motion. From XI, we see that the two balls of quartz and galena, which are theoretically equal-falling in water, may be separated by a stream of air, the falling velocity of the quartz being nearly twice as great as that of the galena. We also see that the velocity of an ascending current of air which will keep a ½ inch galena ball in suspension is about 13 feet less per second than is required to keep a ½ inch quartz ball in suspension; that in this current the quartz ball would fall with a rapidly increasing velocity, and that, practically, this velocity becomes constant after a few seconds, and is then about 13 feet per second, being the same velocity that the rising galena ball would attain in a stream of air which would sustain the quartz. We also see how very little the diameter of the galena would have to vary in order to have entirely different action in the current which sustains the quartz. If the diameter is ⅛ inch, it rises; if the diameter is 1.39 eighths, it remains in suspension; and if the diameter is 1.52 eighths, it will fall as in still water. This illustrates how delicate a medium for separation air is compared with water. If the three galena balls were placed with the ½ inch quartz ball in an ascending stream of water which would hold the quartz in suspension, they

would separate very slowly, the heaviest galena ball having a maximum falling velocity of about 8 inches per second. But this sensitiveness of a stream of air is not necessarily an advantage, for it requires a correspondingly exact uniformity in the blast of air and in the material to be worked, which is not attainable in practice. From IX and X, we see that the blast of air necessary to cause the $\frac{1}{8}$ galena ball to be retarded to the same extent that it would be in water at rest, or, more exactly, to fall 8 feet in the same time as in water at rest, is 69.62 feet per second, and that in this stream the $\frac{1}{8}$ inch quartz would fall 8 feet in about 1 second. It did not fall in the experiment as performed, because the condition under which the experiment was tacitly supposed to have been performed, the condition upon which every discussion on the laws of bodies falling in fluids is based, was violated. This condition was that the air should be perfectly free to move, that the tension of the air below the ball should be the same as above it. In the case of the galena ball this condition was practically complied with, the section of the ball being only $\frac{1}{256}$ that of the tube, but in the case of the quartz ball its section was $\frac{1}{16}$ of the section of the tube. The quartz when held in suspension had the same effect in offering resistance to the passage of the air that it would have had if firmly fixed in the middle of the tube. It was held up against the force of gravity not only by the buoyancy of the air and by the force due to the velocity of the air, but also by the excess of tension below it. It was sustained in part by the same kind of force that impels a package through a pneumatic tube, or forces the cork out of a pop-gun. If the diameter of the tube had been one inch instead of two, the velocity of the air necessary to sustain the quartz would have been much less than 69.62 feet, the section of the tube being only 4 times that of the sphere. That all the difference between the theoretical results and the result of the experiment as performed was due to this one cause cannot be asserted; there may have been some inaccuracy in measuring the small galena ball, and we have seen what a change in action a difference in a diameter of $\frac{1}{16}$ inch makes. The balls may have been rough or not of spherical shape; indeed, from the brittle, crumbling nature of galena it must be quite impossible to make a small smooth sphere out of it.

But supposing that the theoretical results may all be verified by properly conducted experiments, the point which Mr. Krom made, namely, that, though the two balls could not be separated by water, they could be separated by air, remains the same, and it makes very

little difference whether the galena goes up or down, if it only leaves the suspended quartz ball. After describing the experiment, he says: "Thus demonstrating that, instead of less margin, we have in air a much greater margin for separating ores than in water. Before making these experiments I expected to find a margin for separating ores, in favor of air, but did not anticipate it would prove so great. But the experiment proved that 1-8 globule of galena, and 4-8 of quartz, which are equal-falling in still or moving water, can be separated by air. The results correspond exactly with the results obtained in practice, viz., that with less sizing better results can be obtained with air than can possibly be reached with water." The expression "greater margin" might be misleading. It is often applied in speaking of difference in cost and selling price, to profits, where a large margin is desirable; it is a pleasing term, but the only meaning it can have in the case under consideration is, that the ratio between the sizes of quartz and galena, which air will separate, and water will not, is greater than the ratio between the two sizes, that water will separate and air will not. This is true, and if all the pieces of ore in a crushed heap were of two sizes only, and the quartz pieces were four times as large as the galena, air would be a better medium than water. But this is not the case in practice, and if it were, a screen would be the simplest separator. If the pieces of quartz were 2.88 eighths, and the galena $\frac{1}{8}$ inch in diameter, air would not separate them, but water would; hence water, though offering less "margin," is in this case a better separator than air. That medium is the best for the separation of two substances for which the ratio of the diameters of equal-falling spheres is greatest, or, in other words, that medium is best which will separate most readily spheres of the two substances nearest in size. Hence a fluid whose specific gravity lies between those of the substances is the best, and of two fluids, both lighter than the substances, that is better which is denser. As regards sizing, the lighter fluid requires a more careful sizing, the number of sizes required for the different fluids being inversely proportional to the ratios of equal-falling diameters. With any fluid the excellence of separation increases with the number of sizes, and the Germans have found by experience that it is advantageous to make ten sizes between 18 mm. and 1 mm. The excellence of their work in concentration is remarkable, nearly all the loss being in the loss of the minute particles of ore which are carried away with the slimes of the gangue. Their system

seems perfect in other respects, and now the problem is, to devise some way of saving these fine particles, which remain for a long time in suspension even in water at rest. In dry concentration the loss in this form is avoided; the ore dust is removed with the gangue dust, and both are saved—"saved for subsequent treatment" is the last operation it goes through generally. Now it is proposed, however, by the manager of one system of *dry* concentration, to treat this dust in the *wet* way, thus employing water only in that part of the operation where it is most wasteful. If there is any place in which air can be economically used, it is in the treatment of the finest sizes, from 4 mm. to $\frac{1}{2}$ mm., or as fine as can be well sized. From the great velocity of air necessary to raise or hold in suspension a quartz ball of from 12 mm. to 16 mm. diameter, it would seem quite impossible to treat such sizes economically by means of air.

To give an opportunity of testing the theoretical results as described by means of the preceding formulæ, the following table has been calculated. Since perfect spheres of quartz and galena are difficult to make, four other substances have been taken—ivory, glass, zinc, and lead, from which, by turning or molding, very perfect and smooth spheres may be made. The first vertical column contains the name of the substance, the second, their specific gravities, the third, their diameters in millimeters, the fourth, their weight in grams, introduced as a check. If the balls do not weigh as here given, either they have not been made of the right size or the specific gravity is different from that assumed here. As the specific gravity of these substances is quite uniform and well established, any great variation in weight would probably be due to error in size or shape. The fifth and sixth columns contain the suspension velocities for water and air respectively, in meters—by suspension velocity being understood the velocity of a vertically ascending stream of the fluid necessary to keep the given sphere in suspension. The seventh, eighth, and ninth columns contain the times, in seconds, of falling from rest in water at rest through 3, 5, and 10 meters respectively. These values were calculated from (9). Since s is negative for all cases, we may as well regard downward direction positive, and write the formula

$$(13)\ t = s\,A + \frac{0.69315.}{B} -$$

Substance.	Density.	Diameter in millimeters.	Weight in grams.	Suspension velocity in meters.		Value of t for water when C = 0 and s =		
				Water.	Air.	3 m.	5 m.	10 m.
Ivory	1.87	2	0.0078	0.213	8.84	14.10	23.48	46 92
Glass	2.65	2	0.0111	0.294	10.53	10.25	17 06	34.08
Zinc	6.90	2	0.0289	0 555	16.99	5.45	9.05	18.05
Lead	11.35	2	0.0475	0.736	21.79	4.14	6.85	13 65
Ivory	1.87	4	0 0627	0.302	12.50	9 99	16.62	33.20
Glass	2.65	4	0.0888	0.415	14 89	7.27	12.08	24.12
Zinc	6.90	4	0.2312	0.786	24.02	3 88	6.43	12.83
Lead	11.35	4	0.3803	1.040	30.81	2 97	4 89	9.69
Ivory	1.87	8	0.5013	0 427	17.68	7.10	11.79	23 51
Glass	2.65	8	0.7104	0.587	21.05	5.17	8.58	17.09
Zinc	6.90	8	1.8500	1.111	33.97	2.80	4 60	9.10
Lead	11.35	8	3.0430	1.471	43.58	2.15	3.51	6 91
Ivory	1.87	12	1.6920	0.522	21.46	5.82	9 65	19 22
Glass	2.65	12	2.3980	0.720	25.78	4.25	7.03	13.98
Zinc	6.90	12	6.2480	1.361	41.61	2.32	3.79	7.46
Lead	11.35	12	10.2700	1.802	53.37	1.81	2.92	5 69
Ivory	1.87	16	4.0110	0 603	25.00	5.07	8.38	16.67
Glass	2.65	16	5 6830	0.831	29.77	3.71	6.11	12.13
Zinc	6.90	16	14.8000	1.571	48 05	2.04	3.31	6.50
Lead	11.35	16	24.3400	2.081	61.56	1.60	2.56	4.97

For all the cases assumed in the preceding table formula (13) is more than sufficiently accurate, but it would lead to wrong results if applied to bodies falling in air. In the exact formula (8), the value of $-2sAB$ varies, in the case of air, from 2.5 for ivory 2 mm. in diameter falling 10 meters to 0.0155 for lead 16 mm. falling 3 meters; hence -1 cannot be neglected in comparison with ε^{-2sAB}. But for water $-2sAB$ varies in the same limits from 2006.5 to 12.4; hence -1 may be neglected, and (9), deduced on this supposition, may be employed. As far as experimental verification is concerned, the formula $t = sA$ is sufficiently accurate for water, the value of the remaining term of (13) varying in the assumed cases between 0.032 for ivory 2 mm., and 0.161 for lead 16 mm. When C is not equal to 0, me may employ (10) to find the falling time, provided $AC-1$ may be neglected in comparison with $(AC+1)\varepsilon^{2Bt}$; that is, when $AC-1$ is nearly equal to 0, or $C = \frac{1}{A}$ nearly; that is, when the velocity of the current is somewhere near the suspension velocity. $AC-1$ may also be neglected, though not very small, if $(AC+1)\varepsilon^{2Bt}$ is large, or if B is large; or, as B is inversely proportioned to the square root of d, when the sphere is very small. Relatively to the density of the sphere, B is a maximum, in the case of water, when the density is 2. If the density of the sphere is less than that of the fluid, A and B are imaginary. The fundamental formulæ (1) and (2) were deduced on the supposition that the density of the sphere was greater than that of the fluid, and they would assume an entirely

different form, and the discussion would be quite different under the supposition that the density of the sphere is less than that of the fluid.

From the table we see that a blast of air which will keep in suspension a 2 mm. lead ball will sustain a glass ball 8 mm. in diameter, or an ivory ball 12 mm. in diameter. The suspension velocity for the lead being 21.79 m., and for the other two 21.05 m., and 21.46 m., the ivory and glass would rise, theoretically, with a slight velocity; but as perfect accuracy cannot be attained in the conditions, the results of well conducted experiments might vary somewhat from the theoretical. From the table we also find that an ascending current of water which will support a 2 mm. ball of lead will sustain a 12 mm. glass ball, the glass rising slowly, perhaps. Similar experiments may be made in water with ivory 16 mm., and glass 8 mm., with ivory 12 mm. and zinc 2 mm., with lead 4 mm. and zinc 8 mm. In water at rest, ivory 16 mm. and glass 8 mm., will fall 3 meters in about 5.1 seconds; glass 16 mm. and zinc 4 mm., will fall 10 meters in nearly the same time, between 12 and 13 seconds, the glass reaching the bottom about $\frac{1}{4}$ second sooner. Similarly a large number of experiments may be made up from the table to test the theoretical results. Experiments with very small and light balls, such as 2 mm. ivory or glass, would probably not coincide very closely with theory, on account of unavoidable inaccuracy of measurement or the adhesion of air bubbles.

The following may also serve for experimental tests:

XII. In an ascending current of air which will keep an 8 mm. ivory ball in suspension, how long will it take a 4 mm. zinc ball to fall 3 m.? From (10) we find $t = 1.787$.

XIII. In a stream of air which will keep a 12 mm. glass ball in suspension, how long will it take a 4 mm. lead ball to fall from rest 3 m. and 5 m.? From (10) we find for 3 m. $t = 2.235$, and for 5 m. $t = 2.633$. From these two answers we see how nearly the lead ball has attained the limit of its velocity. The limit is $30.813 - 25.783$, or 5.03. It passes over the last two meters in $2.633 - 2.235$ seconds, or in 0.398 of a second, which is at the rate of 5.003 meters per second. Therefore, we may assume the velocity constant, and say, for instance, that it would fall through 10 meters in $2.63 + 1 = 3.63$ seconds.

XIV. In a stream of air which will support a 12 mm. ivory ball, how long will it take a 12 mm. glass ball to fall from rest through 3 m., 5 m., and 10 m.? From the same formula (10) we find $t = 2.064$, 2.524, and 3.674.

XV. How long will it take a 16 mm. ivory ball to fall from rest in air, at rest, through 30 m., 40 m., and 50 m.? From (8), $t = 2.671$, 3.162, 3.623. In a vacuum these values would be 2.473, 2.856, and 3.193.

XVI. How long will it take a 4 mm. ivory ball to fall from rest in air, at rest, through 30 m., 40 m., and 50 m.? From (8), $t = 3.280$, 4.081, 4.882. In a vacuum these values would be 2.473, 2.856, 3.193.

RESULTS OF ANALYSES OF BLAST-FURNACE GASES.

BY CHARLES A. COLTON, E. M., NEW YORK CITY.

(Read at the Amenia Meeting, October, 1877.)

THE results of a series of analyses extending over a period of three weeks at the Cedar Point Iron Company's furnace, Port Henry, New York, are given in Tables I and II. This furnace uses a very pure magnetite and Lehigh and Lackawanna anthracite. The flue leading the gas from the "down-comer" to the boilers was tapped by a $\frac{3}{4}$ inch gas pipe, which carried the gas to the Orsat apparatus. The pressure of the gas not always being sufficient, owing to the small amount made, to force it into the apparatus, I omitted taking samples several days, and with the exception of the last three days of the campaign, made the analyses whenever opportunity offered. I find the Orsat apparatus, as described by Prof. Egleston,* to work very well, with one exception. The CO is not absorbed as readily in the ammonia-copper solution as he states in his description of the apparatus, as many as 50, and sometimes 60, passes being necessary to absorb all the CO.

The power of absorbing rapidly increases as the solution is used, and this would indicate that the more oxygen it contains the quicker will it do the work. Probably the addition of a small amount of some oxidizing agent would remedy this.

When the furnace was working in its normal condition, I had no occasion for using the filter, the amount of fume being so small as not to cause any inconvenience. The gas burned with the flame peculiar to CO, and contained just enough solid particles to give it a slight reddish tinge.

* See Transactions, II, 226; V, 487, 621.

TABLE I.

1877.	Amount absorbed in each five passes.										Total number passes	CO_2	M.
August 6.....	7.0	5.0	4.0	3.0	2.0	2.0	2.0	1.0	0.5	0.5	1.0	55	7 0	.393
" 7.....	10.5	6.5	4.0	2.5	2.0	1.0	1.0	0.5	0.5	0.5	.....	50	7.0	.379
" 7.....	11.0	6.5	4.0	2.5	1.5	1.0	0.5	0.5	0.5	0.5	.....	50	6.5	.359
" 8.....	10.0	6.0	4.0	3 0	2.0	1.0	0.5	0.5	0.5	0.5	.....	50	7.0	.393
" 8.....	10.5	6.5	4 0	2.5	1.5	1.0	0.5	0.5	0.5	0.5	.....	50	7 5	.421
" 9.....	12.0	7.0	4.0	2.5	1.5	1.0	0.5	0.5	0.5	0.5	.....	50	7.0	.367
" 9.....	14 0	7.0	3.5	2.0	1.0	1.0	0.5	.....	.....	.....	.....	35	7.0	.379
" 10.....	11.5	7 0	3.5	2.5	2.0	1.0	1.0	0.5	0.5	.....	.....	45	6.5	.346
" 11.....	12.0	6.5	4 0	3.0	1.5	1.0	0.5	0.5	0.5	.....	.....	45	7.0	.373
" 11.....	13.5	6.5	3 5	2.0	1.0	1.0	0.5	0.5	.....	.....	.....	40	7.5	.413
" 13.....	10 0	6.5	4.5	3.5	2.0	1.5	0.5	0.5	0.5	0.5	.....	55	7.0	.360
" 13.....	13.0	6.5	4.0	1.5	1.5	1 0	0.5	0.5	.....	.....	.....	40	7.0	.385
" 15.....	14.0	6.5	4.0	2.0	1.5	0.5	0.5	0.5	.....	.....	.....	40	6 5	.346
" 16.....	14 5	7 0	4.0	2.0	1.0	1.0	0.5	0.5	0.5	... .	.....	45	6.5	.329
" 20.....	10.0	6.5	5.0	3.0	2.0	1.5	1.0	1.0	0.5	0.5	.....	50	7.5	.380
" 22.....	14 0	7.0	4 0	2.5	1.5	1.0	1.0	0.5	.....	.....	.....	40	6.0	.299
" 22.....	13.5	7.0	4.0	2.5	1.5	1.0	0.5	0 5	0.5	.....	.....	45	6.0	.304
" 24.....	15 0	7.5	3.5	2.0	1.5	1.0	0.5	0.5	.....	.....	.....	40	7.0	.349
" 24.....	15.5	7.0	3.5	2.0	0.5	0.5	0.5	0.5	.....	.....	.....	40	7.0	.366

On August 8th the ratio (M) of $\frac{CO^2}{CO} = 0.421$ was the highest at any time during this period. This for an anthracite furnace smelting magnetite is a good showing for the useful effect of the fuel. The general average for this period was 0.313.

The furnace having been in blast for some time, so that the lining was badly worn, interruptions causing stoppage occurred from time to time, causing a great loss in the useful effect of fuel.

As will be seen by referring to the table, August 22d, the ratio went down as low as 0.299. At that time the tapping notch was lost, and before a new one was obtained tappings were made every hour for five hours. In Table II the results of the analyses are given as made during blowing out.

August 25th, the last charge of ore was put in at 8.30 A.M. At 9 o'clock the first charge of limestone was put on, consisting of two gross tons; 54 charges of limestone were added, making in all 108 gross tons, the last round being charged at 5.30 A.M., August 26th.

As will be seen from the table two analyses were made every six hours during the three days and a half required for blowing out.

After the ore was taken off and only limestone charged, the ratio increased until August 26th, 9.40 A.M., about 25 hours after the last charge of ore was put in, when it reached its maximum, and from that time the temperature began to rise, thus partially decom-

posing the CO_2 of the limestone into CO, and causing the ratio to decrease, the greatest change within any one period being from 4.20 P.M., to 10.05 P.M., August 26th, when the ratio fell from 0.360 to 0.161.

TABLE II.

1877.		Amount absorbed in each five passes.										Total number passes.	CO_2	M.
Aug'st 25,	10.20 A.M.	17.0	5.5	3.5	2.0	1.0	0.5	0.5	0.5	.....	.....	40	7.0	.360
" 25,	10.40 "	18.0	5.5	3.0	1.5	1.0	0.5	0.5	.....	.....	.....	35	7.0	.366
" 25,	4.00 P.M.	15 0	7.0	3.5	2.0	1.0	1.0	0.5	0.5	.....	.....	40	8.0	.412
" 25,	4.20 "	16.0	6.5	3.5	1.5	1.0	1.0	.....	.....	.....	.....	30	8.5	.453
" 25,	10 05 "	17.0	6.5	3.0	1.5	1.0	0.5	0.5	....	.....	.....	35	8.5	.445
" 25,	10 30 "	16.5	6.5	3.5	1.5	0.5	0.5	0.5	.....	.....	.....	35	8.5	.453
" 26,	5.00 A.M.	18.5	6.5	3.0	1.5	0.5	0.5	0.5	0.5	.....	.....	40	8 5	.424
" 26,	5 25 "	18.0	7.0	2.5	1.5	1.0	0.5	0.5	.....	.....	.....	35	8.5	.431
" 26,	9.40 "	16.0	7.0	3.5	1.5	1.5	0.5	0.5	.....	.....	.....	35	9.0	.464
" 26,	10.00 "	17.0	7.0	3.0	2.0	1.0	0.5	0 5	.....	....	.....	35	9.0	.456
" 26,	4.00 P.M.	11.5	6 5	4.0	2.5	1.5	1.5	0.5	0.5	0.5	0.5	50	8.0	.426
" 26,	4.20 "	18.0	7.0	4.0	2.5	1 5	1.0	0.5	0.5	0.5	.....	45	7.0	.360
" 26,	10.05 "	18.5	8.0	3.5	2.0	1.0	0.5	0 5	.....	.....	.....	35	3.5	.161
" 26,	10.35 "	18.0	8.0	3.5	1.0	1.0	0 5	0.5	.....	.....	.....	35	3.5	.169
" 27,	4.00 A.M.	19.0	6.5	2.5	1.5	0.5	0.5	0.5	.....	.....	.....	35	2.0	.101
" 27,	4.20 "	19.0	7.5	3.5	1.5	1.0	0.5	.....	.....	.....	.....	30	1.0	.047
" 27,	9.45 "	17.0	6.5	3.0	2.0	0.5	1.0	.....	.....	.....	.....	30	0.5	.026
" 27,	10.05 "	18.5	6.5	4.0	0.5	2.0	0.5	0 5	.....	.....	.....	35	0.5	.024
" 27,	4.00 P.M.	9.0	7.5	4.5	3.0	2.0	1.5	1.0	0.5	0.5	0.5	55	0.5	.025
" 27,	4.30 "	12.5	8.0	4.5	3.0	2.0	1 0	1.0	0.5	.....	.....	40	0 5	.024
" 27,	9.40 "	17 0	8.0	4.5	2.0	1.5	0.5	0.5	0.5	.....	.....	40	0.5	.022
" 27,	10.10 "	16.75	12.25	2.0	1.5	0.5	0 5	.....	.....	.....	.....	30	0.25	.011
" 28,	4.20 A.M.	17.5	8.0	4.0	2.0	1.0	0.5	0.5	.....	.....	.....	35	0.5	.023
" 28,	4.40 "	17.5	8.0	4.0	2.0	1.0	0.5	0.5	.....	.....	.....	35	0.5	.023
" 28,	9.30 "	16.5	8.0	4.0	2.5	1.5	0.5	0.5	.....	.....	....	35	.....	.....
" 28,	10.30 "	14.5	8.0	4.5	2.5	1.0	1.0	0.5	0.5	.....	.....	40	.....	.....
" 28,	2.00 P.M.	13.0	7.5	3.5	2.5	1.5	0.5	0.5	.....	.....	.....	35	.....	.....
" 28,	2.30 "	13.5	7.5	3.5	2 5	1.0	0.5	0.5	.....	.....	.....	35	.....	.....
" 28,	3.00 "	Stopped blowing.												

At this time the fume became so dense as to nearly close the capillary tubes in the apparatus, and it was necessary to filter the gas.

The gas burned feebly, and instead of a good solid flame, it was divided into a number of tongues of flame, which burned with very little heat, so that that the hand could be held in it without inconvenience.

At 2 A.M., August 27th, the gas was so dirty that it refused to burn and it became necessary to start the fires under the boilers to make steam. At 4 P.M., August 27th, the gas again burned with considerable heat, and at 9.40 P.M. the furnace was working very hot. The analysis taken at 10.10 P.M. shows a great change in 30 minutes. This is probably owing to the large run of slag made just before taking the sample.

At 4.20 A.M., August 28th, scarcely any change was noticed, the analyses showing the gas to have nearly the same composition as the night before. The furnace was still working very hot, so that the inlet pipe to one of the Whitwell stoves was at a dull read heat.

At 9.30 A.M. I failed to get any indication of CO_2 and it became evident that the furnace had but a short lease of life.

The last analysis was made at 2.30 P.M. At 3 P.M. a tapping was made, and from the small amount of iron which flowed out, and from the analysis of the gas, it was evident the work was done.

On examining the interior no fuel was found above the tuyeres, nothing but the calcined limestone, which extended about 18 feet above them. As I had no pyrometer at hand, I was unable to determine the temperatures of the escaping gases at any time.

For the opportunity afforded me for making these analyses, and other work connected with the furnace, I am indebted to Mr. T. F. Witherbee, the Superintendent of the Cedar Point Iron Company.

CLASSIFICATION OF COALS.

BY PERSIFOR FRAZER, JR., PHILADELPHIA.

(Read at the Wilkes-Barre Meeting, May, 1877.)

A CLASSIFICATION of natural objects is usually based either upon some fundamental and permanent attribute of the thing itself (as in the case of scientific classifications), or it embraces one or more generalizations convenient for use in ordinary life. Thus, it suffices for the statistician to know that so many tons of fish are annually taken by our fishermen, and that they realize so many thousands of dollars, whereas to the student of natural history the anatomy, habits, and relationships of the animals are of chief interest, as settling their respective places in the scale of animate nature.

Many different classifications of coals have been attempted, as one would naturally anticipate from the immense extent of the coal trade, and the different localities whence the supply was derived.

The English divisions were prevalent up to the date of the publication of the last geological survey of the State, except so far as they were modified by local designations. Indeed, Rogers' classifications made very little alteration in the English nomenclature, as may be seen by comparing the tables given below.

To commence with the different kinds mentioned in Ure's *Dictionary of Arts, Manufactures and Mines* of 1845:

"1. *Cubical Coal.*—Black, shining, compact, moderately hard and easily frangible. Comes out in rectangular masses, of which the

smaller portions are cubical. The '*reed*' or lamellæ parallel to the bed-plane on which the coal rests. Of cubical coal there are two varieties—(*a*), open burning; (*b*), caking. The latter is available as a fuel, no matter how small its particles may be, and is the true smith coal, forming a vault in front of the bellows. (*a.*) The open burning coal is known as *rough* or *clod coal* from the large masses in which it is taken out, and *cherry coal* from the cheerful blaze with which they spontaneously burn; whereas the caking coals, like some of those from Newcastle, require to be frequently poked in the grate.

"2. *Slate or Splint Coal.*—Color, dull black, very compact, much harder and less frangible than the last. Readily fissile, like slate, but powerfully resists the cross fracture, which is conchoidal. Specific gravity, 1.26 to 1.40. In working it separates into large quadrangular sharp-edged masses. It burns without caking, with much flame and smoke, unless judiciously supplied with air, and leaves frequently a considerable bulk of white ashes. Good coal of the Glasgow field Dr. Ure found to have a specific gravity of 1.266, and to consist of 70.9 C; 4.3 H; 24.8 O.

"3. *Cannel Coal.*—Color, between velvet and grayish black; lustre resinous; fracture, even; fragments, trapezoidal. Hard as splint coal. Specific gravity, 1.23 to 1.28. In working it is detached in four-sided columnar masses. Often breaks conchoidal, like pitch; kindles very readily, and burns with a bright, white, projective flame. Cannel Coal from Woodhall, near Glasgow, consists, by Dr. Ure's analysis, as follows: Specific gravity, 1.228, C 72.22, H 3.93, O 21.05 (with a little nitrogen, about 2.8 in 100 parts).

"4. *Glance Coal.*—'Color, iron-black, with an occasional iridescence like that of tempered steel; lustre, in general, splendent, shining, and imperfect metallic. It does not soil, is easily frangible, and has flat conchoidal fracture, and sharp-edged fragments. It burns without flame or smell, except when sulphurous (*sic*), and it leaves a white-colored ash. It produces no soot, and seems indeed to be merely carbon, or coal deprived of its volatile matter and bitumen, *and converted into coke from subterranean calcination* (*sic*), *frequently from contact with whin dikes.*' Abounds in Ireland under the name of Kilkenny coal. In Scotland it is called 'blind coal,' and in Wales 'malting or stone coal.' It contains 90 to 97 per cent. C, specific gravity, 1.3 to 1.5, increasing with the proportion of earthy impurities."*

* Ure's Dict. Ed. 1845, p. 969.

In Watt's *Dictionary of Chemistry*, vol. I, p. 1032:

"The following appears to be as satisfactory a classification of the more important kinds (of coal) as is possible, together with an indication of their characteristic differences and of the localities whence they are obtained.

"1. *Lignite or Brown Coal* generally maintains its lamellar or woody structure. Yields a powdery coke in the form of the original lumps. Brittle, burns easily, but often contains from 30 to 40 per cent. of water.

"2. *Bituminous or Caking Coals.*—The most extensively diffused and valuable of the English coals. Are of various shades of brown and black; emit much gas on heating.

"*a. Caking Coal.*—Splinters on heating, but the fragments then fuse together into a semi-pasty mass.

"*b. Cherry Coal* or soft coal.—Lustre very bright. Does not fuse. Ignites well and burns rapidly.

"*c. Splint, Rough, or Hard Coal.*—Black and of glistening fracture. Does not ignite readily, but burns up to a clear, hot fire, constituting a good house coal.

"*d. Cannel Coal* (Parrot Coal of Scotland).—Of dense, compact, and even fracturé, conchoidal in every direction. Takes a polish like jet. Splinters in the fire, and burns clearly and brightly.

"4. *Anthracite, Stone Coal, or Culm.*—The densest, hardest, and most lustrous of all varieties. Burns with little flame and no smoke, but gives a great heat. Contains very little volatile matter. Splinters when heated, and ignites with difficulty. Color deep black, fracture lamellar, parallel to bed of deposit. Conchoidal in cross fracture. Applied successfully to smelting, and much valued as a steam coal in the navy.

"*Steam Coal.*—Approaches nearly to anthracite. It does not crumble into small pieces under friction, and is hence well adapted for stowage. It also emits little smoke."

The most careful classification yet made, as well as the one which concerns us most nearly from the fact that the types on which the classification is based are from our own district, is that of Prof. H. D. Rogers, p. 983, vol. II, part 2, of his general *Report*. He says;

"Subdividing the whole class of substances, which we call coal in accordance with their most natural characters, we find them to arrange themselves into the following four principal groups, in the order of diminishing carbon and augmenting hydrogen.

"Anthracites.—Volatile matters below 6 per cent.

"Semi-anthracites.—Volatile matters below 10 per cent.

"Semi-bituminous.—Volatile matters between 12 and 18 per cent.

"Bituminous.—Volatile matters above 18 per cent.

"These convenient distributions, 'which have crept extensively into use since first proposed by me,' are retained as a basis of a general classification which recognizes three main orders, viz.: *Anthracites, Common Bituminous*, and *Hydrogenous*."

In the following table will be found a condensed form of the definitions which he applies to the coals:

- **Anthracite.**
  - Hard or dry.
    - C, 94 to 90 per cent.
    - H, 1 to 3 "
    - O and N, 1 to 3 "
    - Water, 1 to 2 "
    - Ashes, 3 to 4 "
  - Semi or gaseous.
    - C, 84.0 per cent.
    - Volatile inflammable matter, 7.5 "
    - Water expelled at 212°, 2.5 "
    - Earthy matter, 6.0 "
- **Common Bituminous Coal.**
  - Semi-Bituminous.
    - Cherry.
    - Splint.
  - Bituminous.
    - Caking. Sp. gr. 1.269, C, 76.0, H, 5.0, Ash, 1.5 (Average proximate analysis of the order.)
      - Carbon, 52 to 84 p. c.
      - Volatile H. Cs, 12 to 48 "
      - Earthy matter, 2 to 20 "
      - Sulphur, 1 to 3 "
      - Water at 212°, 1 to 4 "
    - Cherry.
      - More C and H. than caking coal, and leaves about 10 p. c. of ash.
      - Specific gravity, 1.255.
      - Ultimate analysis.
        - C, 75 to 80 p. c.
        - H, 5 to 6 "
        - N, 1 to 2 "
        - O, 4 to 10 "
        - S, 0.4 to 3 "
        - Ash, 3 to 10 "
    - Splint.
      - Specific gravity, 1.29.
      - 9 p. c. ash is best.
- **Hydrogenous or Gas Coal.**
  - Cannel coal, minimum yield of gas, 9000 cubic feet per ton.
  - Shaly (Torbanehill).
  - Asphaltic (Albert Mine).

This classification of Prof. Rogers, whilst perhaps convenient for commercial purposes, is faulty in theory, and the cause of much confusion in discussing the proper place to which different coals should be assigned, because elements are introduced into the definition which are unessential to the fuel proper, but of which the variation nevertheless will cause an apparent variation in the essential constituents of the coal, *i. e.*, its ignitible constituents.

It is not claimed here that some such definition may not serve a good purpose among coal dealers by implying in one word a number of different ideas, but the inevitable result of an attempt of this kind is, 1st, to enormously increase the vocabulary necessary for transmitting ideas, and, 2d, to prevent the exact expression of slight shades of difference where there happens to be no corresponding word for such shades. Like the Chinese language, it makes a word stand for a whole sentence, but, also like the Chinese, it demands an inordinately large number of words.

As an illustration of some of the bad effects of such a system (at

least for systematic classification), let us suppose that we have a pure coal corresponding to each of the limits which Professor Rogers sets for bituminous coals, viz.: 1st. Fixed carbon, 84 per cent.; volatile hydrocarbons, 12; that is to say, one part of volatile hydrocarbons to 7 parts of fixed carbon. 2d. Fixed carbon, 52, and volatile hydrocarbons, 48 = 13: 12. If we mix the first of these materials with various weights of impurities, we shall have substances whose constitution is expressed in the following table:

		I.	II.	III.	IV.
Impurities, . . .	Per cent.	20	28	36	44
Fixed carbon, . .	" "	70	63	56	49
Volatile hydrocarbons, .	" "	10	9	8	7

In the second case the table would be:

		I.	II.	III.	IV.
Impurities, . . .	Per cent.	0	25	50	75
Fixed carbon, . .	" "	52	39	26	13
Volatile hydrocarbons, .	" "	48	36	24	12

Yet the *fuel* portion of all the mixtures in the first table is the same, viz., a bituminous coal of the composition C : V. H-C. : : 87.5 : 12.5, and that of all the mixtures in the second C : V. H-C : : 52 : 48. The foreign impurity is the only item of difference between the analyses of each table.

In other words, if the important allowance be made for impurities, most of which are accidental in the formation of the coal, we see by the first table that one of the coals, reckoned at present to the bituminous series, might descend to the composition of a dry anthracite, by impurities introduced into it after it was mined, if these impurities did not remove it from the catalogue of commercial fuels. By the second table it is observed that by the same means a fat hydrogenous coal might be so modified by foreign substances that, if the latter be neglected, it could be placed in the category of a semi-anthracite. Neither is such a large amount of impurity an anomaly, nor does it affect the character of the coal, except commercially. The "bone" and roof shales ought to be able to indicate the character of their coals almost as well as the coals themselves, and though the materials are not here at hand to prove that they would do so, it is nevertheless quite possible that they would.

The true method to be pursued in obtaining comparative data for coals is indicated by Prof. Walter R. Johnson, in his unrivalled report

to the United States Government, in 1844, on *American Coals;* and consists in giving the ratio of volatile to fixed combustible matter.

CUMBERLAND COALS.	PENNSYLVANIA COALS.
I. New York & Maryland Mining Co.	VII. Dauphin and Susquehanna.
II. John Neff's, near Frostburg, above Cumberland.	VIII. Blossburg.
III. William Easby, "coal in store," Cumberland, Md.	IX. Lycoming County (near Ralston).
IV. Easby and Smith, "coal in store" mine.	X. Quinn's Run.
V. Atkinson & Templeman, Dan's Mt.	XI. Karthaus.
VI. Cumberland (for Navy Yard use).	XII. Cambria County, ten miles from Hollidaysburg.

A synoptical table, containing the analyses, specific gravity, etc., of the above coals, is printed, p. 304 of Prof. Johnson's *Report,* as summing up the information obtained in regard to this class of coals.

The ratios of volatile to fixed combustible matter (*i. e.* the quotient obtained by dividing the percentage of the former into that of the latter) here follows:

	I.	II.	III.	IV.	V.	VI.
Cumberland Coals, .	5.971	5.880	5 089	4.786	4.937	5 000
	VII.	VIII.	IX.	X.	XI.	XII.
Pennsylvania Coals, .	5.374	4.946	5.181	4.046	4.110	8.656

Professor Rogers, in his Essay on the "Classification of Coals," Vol. II, part 2, p. 989, appears in one sentence to recognize the importance of this ratio, though he nowhere makes it an essential factor of his system, unless it be in a table which will be considered shortly. He remarks:

"The distinctive properties of the different kinds of coal are determined mainly, though not altogether, by the relative proportions of solid carbon and volatile matter which they severally contain."

Also: "The essential difference between the bituminous coals and the anthracites is, not that the latter contain no gases or volatile matter, for they sometimes possess as much as 9 or 10 per cent., but that they are destitute of those chemical compounds of the gases and the carbon known as bitumen."

On referring to the analyses of the coals whose ratio of combustibles is thus given, it will be acknowledged that the uniformity of these results is satisfactory, considering that the percentage of fixed carbon varies between 68.438 and 76.688; the volatile substances between 12.309 and 19.019; and the ash between 7.000 and 13.961.

And as to minor differences, be it observed that the necessary connection of these beds with each other has not been made out by Professor Johnson, who only associates them together for temporary convenience.

It is not always easy to simplify the method of stating this ratio to the form adopted in Professor Johnson's table as above, for to be applicable it must include all kinds of coals, including the "Hydrogenous or Gas Coals," whose percentage of volatile is greater than that of fixed combustible matter. In this case a single number, viz., the quotient of $\frac{C}{\text{Vol. H-C.}}$ would be a fraction, and this is to be avoided if possible. Of course where the water is also considered the plan of expressing the ratio by a single number is impossible.

Such ratios introduced into the discussions of the natural fuels have the same right of existence, and would fill very nearly the same rôle in such discussions that the silica, protoxide, and sesquioxide ratios do in the analytical formulæ of minerals. It would be too much to say that either method would permit of a rigid division into classes, since there are transition forms which always will prevent such absolute divisions of natural objects; but these cases will form a small portion of the whole number, and the handling of the rest will be much simplified.

In the tables constructed with due regard to the above consideration, the first number indicates the percentage amount of fixed carbon in the proportion. The next number refers to the volatile combustible matter. Here the analogy ceases in most cases, since we have determined above to regard the coal as essentially a mixture of gas, carbon, and impurity, under which latter term we include water, ash, sulphur, phosphorus, and whatever is not a necessary factor of the fuel; whether held in the fossil fibre of the coal-plant or separated by ignition; whether oxidized or volatilized.

A few considerations regarding these impurities will be found further on.

To repeat: In most cases the analogy between the oxygen ratio of minerals and the combustible ratio of the fuels will cease at the second term, or as if there were simply the oxygen of the electro-negative to be compared with that of the electro-positive elements. But just as in this latter case it is found most convenient to separate the electro-positive elements by their quantivalences, or *valences*, and thus to make a proportion of several terms; so it will be found best to add a third term to those expressing the fixed and gaseous com-

bustibles for the purpose of eliminating an error which is likely to occur in estimating the hygroscopic moisture.

All those who have had any experience in the analysis of coals are aware that no operation during the analysis requires so much care as the water determination.

From amidst the mass of testimony from numerous chemists on this subject, I select that of Prof. Wormley, in the *Reports of the Ohio Geological Survey*, who states that a given sample of coal loses less in weight when raised to 240° than at 212°. Mr. A. S. McCreath, the chemist of the present Geological Survey of Pennsylvania, in alluding, in his description of methods, to this observation (*Report M., Second Geological Survey of Pennsylvania*, 1874–75, p. 28), adds that "this was not found to be the case with the coals" he "examined from this State, for in every instance was the loss greater *when the coal was dried at* 225° *than at* 212°."

It follows, however, from these observations that the less loss must amount to an increase of weight through oxidation, accompanied very often, also, by an actual disengagement of volatile hydrocarbons by distillation at even these low temperatures.* So that the resultant will be the sum of a number of positive and negative quantities, depending upon the character of the coal, and the ease with which its composition is changed by heat. That the actual constitution of the coals is thus changed to a greater or less extent seems undoubted.

If, now, part of the volatile substances which should have been reckoned to the combustible hydrocarbons have been expelled with the moisture, the gas-carbon ratio will be affected by it, and, in cases where the known character of the fuel permits a close approximation to the true amount of its moisture, this correction should be made in the form of a third term to the proportion. When this appears without other explanation, it is understood to refer to the moisture, thus, C : V. H-C. : W = Fixed carbon : volatile hydrocarbons : water.

It is unfortunate that in the coal analyses cited by Professor Rogers, including those of Professor Johnson, no attempt has been made to separate the moisture from the volatile hydrocarbons, all being considered alike volatile matter. This fact vitiates any classification which may be based on such analyses.

A list of sixteen analyses of "hard dry anthracites" from Rogers's

* See remark of Varrentrapp, quoted from Rothwell, by McCreath, p. 33.

final Report, vol. II, part 2, pp. 969, 970, is given in the following table, together with two extra columns showing the percentage of fixed carbon and volatile matter, calculated according to the principles stated above:

TABLE I.—HARD DRY ANTHRACITES.

	Rogers's Analyses.			Total.	Percentage of Constituents of Fuel.		
	Fixed Carbon.	Volatile Matter.	Ash, Water, and Impurities		Fixed Carbon.	Volatile Combustible Matter.	C / V. H-C.
1. Rhode Island	77.00	3.00	20 00	100	96.25	3.75	25.66
2. Nesquehoning, 10-foot vein	86.60	6.40	7.00	100	93.11	6.89	13.51
3. Summit Mines of Lehigh Co.	88 50	7.50	4.00	100	92.19	7.81	11.80
4. " "	87 70	6.00	5.70	100	93.00	7.00	13.28
5. Tamaqua Coal D., East	92 07	5.03	2.90	100	94.82	5.18	18.30
6. Tamaqua Coal E., East	89 20	4 54	6.26	100	96.10	3 90	24.64
7. Tamaqua Coal R., Sharp Mt.	87.45	7.55	5.00	100	92.05	7.95	11.57
8. Tuscarora	88.20	7.50	4.30	100	91.38	8.62	10.60
9. Beaver Meadow	90.20	2.52	7.28	100	97.28	2.72	35.76
10. Schenoweth Bed, E. Norweg'n	94.10	1.40	4.50	100	98.53	1.47	67.02
11. Third Coal, Nealy's Tunnel, near Pottsville	89.20	5.40	5.40	100	94.29	5.71	16.51
12. Forest Improvement	90.70	3.07	6.23	100	96.72	3.28	29 48
13. Sharp Mt., N. of Pine Grove	80 57	7.15	12.28	100	91.85	8.15	11.27
14. Lykens Valley	83.84	6 88	9.28	100	92.41	7.59	12.17
15. Shamokin	89 90	6.10	4.00	100	93.64	6.36	14.71
16. Black Spring Gap	82.47	9.53	8.00	100	89.63	10.37	8.64

No. 1 was analyzed by Hayes; Nos. 2, 3, 4, 5, 6, 7, 8, and 13, by the First Geological Survey of Pennsylvania; Nos. 9, 10, 11, 12, 14, 15, and 16, by Prof. W. R. Johnson.

A similar table, with similar added columns of the semi-anthracites from the same source here follows:

TABLE II.—SEMI-ANTHRACITES.

	Rogers's Analyses.			Total.	Percentage of Constituents of Fuel.		
	Fixed Carbon.	Volatile Matter.	Ash, Water, and Impurities		Fixed Carbon.	Volatile Combustible Matter.	C / V. H-C.
1. Black Spring Gap, Lea Vein	88.84	8.96	2 20	100	90.83	9.17	9.90
2. " " " Gray Vein	81.62	9.78	8.60	100	89 30	10.70	8.35
3. Lykens Valley, Third Bed	88.25	8.85	2.90	100	90.83	9.17	9.90
4. Zerbe's Run	84.25	7.31	8.44	100	92.01	7 99	11.51
5. Wilkesbarre, Warden's Bed	88.90	7.68	96 58	100	92.04	7.96	11.56
6. Carbondale	90.23	7.07	2.70	100	92.73	7.27	12.75
7. Black Spring Gap, gray band of Gray Vein	81.40	11.40	7.20	100	87.72	12.28	7.14
8. Gold Mine Gap, Peacock Vein	82 15	10.95	6.80	100	88.23	11.77	7.49
9 " " Heister Vein	81.47	10.43	8.10	100	88.65	11.35	7.81
10. Rausch Gap, Dauphin, Peacock Vein	77 23	10.57	12.10	100	87.96	12.04	7.30
11. Yellow Spring Gap	79.55	10.95	9.50	100	87.90	12.10	7.26
12. Rattling Run, Dauphin	74 55	13.75	88.30	100	84.42	15 58	5.41

Nos. 1 and 2 analyzed by Prof. W. R. Johnson; Nos. 3, 5, 6, 7, 8, 9, 10, 11, 12, First Geological Survey of Pennsylvania; No. 4, Hayes (mean of 5 analyses).

The following is a list of the semi-bituminous coals from the same source and place:

TABLE III.—SEMI-BITUMINOUS COALS.

	Printed Analyses.			Total.	Percentage of Constituents of Fuel.		
	Fixed Carbon.	Volatile Matter.	Ash, Water, and Impurities		Fixed Carbon	Volatile Combustible Matter.	C / V. H-C.
1. Big Flats *a*	76.94	15.06	8.00	100	83.63	16.37	5.10
2. Broad Top, Hopewell Mine *a*	88.80	11 20	0.00*c*	100	88.80	11.20	7.93
3. Blossburg *a*	73.11	15.27	11.62	100	82.62	17.39	4.75
4. Lycoming Creek *a*	71.53	14.48	13.99	100	83.16	16.34	5.09
5. N. Y. & Maryland Mining Co *b*	73.50	14.10	12.40	100	84.13	15.87	5.30
6. Neff's *b*	74.53	15.13	10 34	100	83.12	16.88	4.92
7. Easby's Coal in Store *b*	76.27	15.65	8.08	100	82.97	17.03	4.87
8. Atkinson & Templeman's *b*	76.69	15.98	7.38	100	82.75	7.25	11.41
9. Easby & Smith's *b*	74.29	16.42	9 29	100	81.80	18.11	4 52
10. Cumberland, Navy Yard *b*	68.44	17.28	13.98*d*	100	79.84	20.16	3.96

a Analyzed by Penn. Geol. Survey. *b* Analyzed by Prof. W. R. Johnson.

c An unaccountable blunder in the tables makes this 4 per cent. of impurities, after the 100 per cent. has been accounted for. In many places these analyses of coals of Rogers's Survey show signs of carelessness. This impurity has been stricken out, but this is not probably the right correction.

d An error here of 0.41 per cent. in excess.

The table of bituminous coals, numbering 19, which follows in Rogers's Report, is composed entirely of analyses by Professor W. R. Johnson, and in these the calculation is made on the principle advocated in this paper, viz., by making the fixed carbon and volatile matter together = 100. The ash is ascertained directly from the analyses, while these other ratios must have been the subject of after-computation; yet there is nothing to indicate that, in the columns giving volatile matter and fixed carbon in 100 parts, a different system from the foregoing has been introduced.

TABLE IV.—BITUMINOUS COALS.

	Johnson's Analyses.			C / V. H-C.	Earthy Matter in 100 parts of the Coal.
	Fixed Carbon	Volatile Matter.	Sum.		
1. Lick Run, Lycoming County	79.28	20.72	100	3.82	13.07
2. Queen's Run, below Farrandsville	78 28	21.50	100	3.64	4.60
3. Snow-Shoe Mine	78 80	21 20	100	3.71	2.07
4. Moshannon Creek, near Philipsburg	70.50	29.50	100	2 39	6.10
5. Speed's Mine, 16 miles from Philipsburg	79.60	20.40	100	3.90	12.00*a*
6. Leach's Mine, 17½ miles from Philipsburg	79 68	20.32	100	3.92	11.75
7. Upper part of large bed, Ralston	79 50	20.50	100	3.88	5.00
8. Karthaus, Lower Seam	75 20	24.80	100	3.03	4.70
9. Reed's 6-foot vein, Curwinsville	73 00	27.00	100	2.70	5.80
10. Bear Creek, Blossburg	68.00	32.00	100	2.12	5.20
11. Warner's 5-foot vein, Caledonia	63.00	37.00	100	1.70	8.50
12. Warner's 3-foot vein, Caledonia	61.80	38 20	100	1.61	7.20
13. Blairsville Large Bed	69.00	31 00	100	2.22	4.00
14. Sandy Ridge, 4 miles from Shippensville	56.80	43.20	100	1.31	7.00
15. Cannel Coal, 6 miles east of Franklin	47.22	52.78	100	0.89	17.68
16. Cannel Coal from Greensburg	64.00	36.00	100	1.77	33.88
17. Conneaut Lake	61.25	38.75	100	1.50	1.80
18. Near Greenville	40.50	59.50	100	0.68	1.70
19. Near Orangeville	56.25	43.75	100	1.28	2.80

a In Rogers's Report this is printed 120, probably intended for 12.0.

I have been permitted by Professor Lesley, Chief Geologist of the Second Geological Survey of Pennsylvania, to employ the following analyses for the purpose of further testing the method of classification advocated here. They were all made in the laboratory of the Geological Survey in Harrisburg, by Mr. A. S. McCreath, as the Chemist of the Survey, and fellow-member of the Institute. They are inserted as grouped by Professor Lesley, with his numbers appended to them.*

TABLE V.—WAYNESBURG COAL BED, UPPER BENCH.

	2	3	4	5	6
Water at 225° Fah	1.230	1.036	0.740	1.385	0.770
Volatile Hydrocarbons	33.135	38.304	36.040	37.210	36.115
Fixed Carbon	49.115	48.966	46 890	42 335	48.554
Sulphur	1.705	2.726	2.375	3 710	2.146
Ash	14.815	8.969	13.955	15.360	12.415
Color	Gray.	Gray.	Gray.	Red.	Reddish Gray.
Sum	100.00	100.00	100.00	100 00	100.00
Coke, per cent	65.635	60 660	63.220	61.405	63.115
Fixed Carbon	59 72	56.11	56 53	53 22	57.34
Volatile Hydrocarbons†	40.28	43.89	43.47	46.78	42.66
Sum	100.00	100.00	100 00	100.00	100.00
C / V. H-C.	1.48	1.27	1,30	1.13	1.34

No. 2.—Near Jefferson, Jefferson Township, Greene County, Pa. Coal of dull, dirty appearance, coated with iron oxide. It contains a good deal of mineral charcoal and numerous thin partings of pyrites

No. 3.—Two miles from Carmichael's, in Cumberland Township, Greene County, Pa. The Coal is hard, with a somewhat columnar structure and resinous lustre. It carries some mineral charcoal and pyrites. (Analyst, S. A Ford.)

No. 4.—Half a mile north of Bealsville, in West Pike Run Township, Washington County, Pa. Coal hard and compact; seamed with mineral charcoal and pyrites. Some pieces distinctly laminated. (D. McCreath.)

No. 5.—Two and a half miles south from West Middletown, in Hopewell Township, Washington County, Pa. Coal compact, with bright, shining lustre. Contains numerous thin partings of slate and pyrites.

No. 6.—Two miles northeast from Hillsboro, in Somerset Township, Washington County, Pa. Coal exceedingly tender; generally coated with an efflorescence of copperas. Seamed with charcoal and pyrites.

From the above consideration it would appear that the true analogues among the above coals are Nos. 3 and 5 and Nos. 4 and 6. No. 2 is evidently the only representative of its own class among the specimens.

The Lower Bench of the same Waynesburg basin is represented as follows:

* These analyses will be shortly issued in the report of Mr. McCreath (MM.) for 1875. P. F., Jr., March, 1877.

† Neglecting the impurities, and counting the fixed carbon and volatile hydrocarbons together = 100.

TABLE VI.—WAYNESBURG COAL BED, LOWER BENCH.

	7	8	9	10	11
Water at 225° Fah	1.265	1.175	1.180	1.235	0.920
Volatile Hydrocarbons	34.685	35.615	32.344	36.185	33.710
Fixed Carbon	49 590	49.725	51.582	46 723	52.064
Sulphur	1.270	2 280	1.306	2.972	1.121
Ash	13.190	11.205	13.588	12 885	12.185
Color	Gray.	Pink.	Cream.	Reddish Gray.	Gray.
Sum	100 00	100.00	100.00	100.00	100.00
Coke, per cent	64.050	63.210	66.476	62.580	65.370
Fixed Carbon*	58 84	58 26	61.46	58 35	60.69
Volatile Hydrocarbons	41.16	41.74	38.54	43 65	39.31
$\frac{C}{V.\ H\text{-}C.}$	1.43	1.39	1.59	1.29	1.54

No 7.—One and a half miles from Waynesburg, in Franklin Township, Greene County, Pa. Coal very hard and compact, resinous lustre; somewhat slaty. (David McCreath.)

No. 8.—Near Jefferson, Jefferson Township, Greene County, Pa. Coal shining, iridescent, brittle, with numerous thin partings of pyrites.

No. 9.—One mile from Carmichael's, in Cumberland Township, Greene County, Pa. Coal hard, with resinous lustre; carries a good deal of pyrites in thin partings, also some mineral charcoal and slate. (S. A. Ford.)

No. 10.—On Ruff's Creek, in Morgan Township, one-half mile from Martinsville, in Greene County, Pa.

No. 11.—Near Centre School-house, in Morgan Township, four miles from Jefferson, Greene County, Pa. Coal hard, brittle; seamed with mineral charcoal and pyrites; shows a slight efflorescence of copperas. (D. McCreath.)

Another series still, the Lower Bench of the Waynesburg Coal Bed, was represented as follows:

TABLE VII.

	12	13	14	15
Water at 225° Fah	1 200	1.000	1.810	1 190
Volatile Hydrocarbons	38.860	35.675	38 520	36.585
Fixed Carbon	49.402	50.846	51.181	43 489
Sulphur	2.348	1.694	1.179	2.806
Ash	8 190	10.785	7.310	15.930
Color of Ash	Pink.	Cream.	Cream.	Gray.
Sum	100.00	100.00	100.00	100.00
Coke, per cent	59 940	63.325	59 670	62.225
Nearest Simple Proportion	5.4	10.7	4.3	20.17
Fixed Carbon†	55.97	58 75	57.05	54.31
Volatile Hydrocarbons	44.03	41.24	42.95	45 69
Sum	100.00	100.00	100.00	100.00
$\frac{C}{V.\ H\text{-}C.}$	1.27	1.36	1.32	1.19

No. 12.—Three miles from Jefferson, Greene County, Pa. Coal very brittle, of dull, dirty aspect, mostly coated with iron oxide; fresh fracture of pitchy lustre; contains a good deal of pyrites

No. 13.—Rice's Landing, Greene County, Pa. Coal of dull, dirty aspect, much coated with iron rust and a yellowish efflorescence of copperas; considerable slate, mineral charcoal, and pyrites.

No. 14.—Near Atchison Post Office, Buffalo Township, Washington County, Pa., two miles west by north from Washington, and on Brush Run. Compact, bright, shining lustre; numerous thin partings of mineral charcoal, slate, and pyrites.

No. 15.—At Pleasant Valley Village, eight miles southeast of Washington, Washington County, Pa. Coal hard, compact; seamed with charcoal, slate and pyrites; much coated with yellowish efflorescence of copperas. (David McCreath.) Specimen not marked as from any special bench in the bed.

* Calculated as = 100, neglecting all other constituents of the analysis.

† Fixed carbon + volatile combustible matter taken = 100. Other constituents of the coal neglected.

The following table expresses, in a condensed form, the percentage of hydrocarbons in all the above-mentioned specimens from the Waynesburg Bed, assuming the sum of the fixed carbon and volatile hydrocarbons to be together equal to 100, and neglecting the bench to which each belongs, and omitting fractions.

TABLE VIII.

Numbers	5	15	3 10 12	4 6 14	8	7 13	2	9 11
Per cent. of Vol. H-Cs. (C+H-C = 100)	47	46	44	43	42	41	40	39

In other words, the most gaseous representative of the Upper Bench of the Waynesburg coal is No. 5, from Hopewell Township, Washington County, Pa., and the least gaseous from the same bench, No. 2, from Jefferson Township, Greene County; while that representative of the lower bench richest in volatilizable fuel is No. 15, from Pleasant Valley, Washington County (very nearly like No. 5), and the poorest is No. 9, Cumberland Township, Greene County, (very nearly the same as No. 2).

The Sewickly coal bed is the second bed above the Pittsburg coal bed, and underlies the great limestone of the Upper Productive, or Monongahela River Coal Series.

TABLE IX.—SEWICKLY COAL BED.

	17	18	19
Water at 225° Fah.	1.790	1.500	1.088
Volatile Matter	35.400	30.428	34.012
Fixed Carbon	56.818	55.038	51.783
Sulphur	1.152	1.406	2.261
Ash	4.840	11.628	10.856
Sum	100.000	100.000	100.000
Coke	62.810	68.072	64.000
Fixed Carbon,) Simplified	56.818	55.038	51.783
Volatile Matter,) Simplified	35.500	30.428	34.012
Impurities,) Simplified	7.702	14.534	14.205
Fixed Carbon	61.62	64.39	60.35
Volatile Matter	38.39	35.61	39.65
$\frac{C}{V.H\text{-}C}$	1.60	1.80	1.52

No. 17.—Lucas Creek, Upper Bench, Greene County.
No. 18.—Whiteby Creek, Upper Bench, Greene County.
No. 19.—Gray's Bank, Lower Bench, Greene County.

TABLE X.—PITTSBURGH COAL BED—ROOF COAL.

	21 L. Vernon's.	22 Patterson's.	23 J. Magee's.
Fixed Carbon	45.895	51.467	41.324
Volatile Hydrocarbons	38.490	36.770	40.510
Water	1.020	0 775	1.510
Sulphur	2.905	2.048	7.566
Ash	11.690	8 890	9 090
Sum	100.000	100.000	100.000
Coke	60.490	62.455	59 980
Color of Ash	Gray.	Gray.	Deep Pink.
Fixed Carbon, } Simplified	45.895	51.467	41.324
Volatile Hydrocarbons, } Simplified	38.490	36.770	40.510
Impurities, } Simplified	15.615	11.763	18.166
Sum	100.000	100.000	100.000
Fixed Carbon*	54.38	58 32	50.09
Volatile Hydrocarbons	45.62	41.68	49.91
Sum	100.00	100.00	100.00
C / V. H-C.	1.19	1.39	1.00

TABLE XI.—PITTSBURGH BED, UPPER BENCH, WASHINGTON CO., PA

	24 Reed's.	25 Neil's.	26 West's.	27 J. White's
Fixed Carbon	57.332	55.010	60 537	55.312
Volatile Hydrocarbons	35.315	35.350	35.420	36.810
Water	1.110	1.020	1.220	0.890
Sulphur	0.648	0.875	0.658	0.643
Ash	5.595	7.745	2.165	6.345
Sum	100.000	100.000	100.000	100.000
Coke	63.575	63.650	63.360	62 300
Color of Ash	Cream.	Gray-red tinge.	Red.	Cream.
Fixed Carbon, } Simplified	57.332	55.010	60.537	55.312
Volatile Hydrocarbons, } Simplified	35.315	35.350	35.420	30.810
Impurities, } Simplified	7.353	9.640	4 043	7.878
Sum	100.000	100.000	100.000	100.000
Fixed Carbon*	61.88	60.87	63.08	60.04
Volatile Hydrocarbons	38.12	39.13	36.92	39 96
Sum	100.00	100.00	100.00	100.00
C / V. H-C.	1.62	1.65	1 58	1.50

* Fixed carbon + volatile combustible matter taken = 100. Other constituents neglected.

TABLE XII.—PITTSBURGH BED, UPPER BENCH, WASHINGTON CO., PA.

	28 N. Eagle Works.	29 Liddel's.	30 Thomas's.	31 Bushfield's.	32 L. Vernon's.
Fixed Carbon	58.154	55.030	50.311	54.561	54.185
Volatile Hydrocarbon	35.830	35.075	40.350	37.735	38.580
Water	1.180	0.650	1.080	1.730	0.850
Sulphur	0.761	1.910	2.594	1.499	1.290
Ash	4.075	7.335	5.665	4.475	5.095
Sum	100.000	100.000	100.000	100.000	100.000
Coke	62.990	64.275	58.570	60.535	60.570
Color of Ash	Gray.	Cream.	Red.	Gray.	Gray-red tinge.
Fixed Carbon, Volatile Hydrocarbons, Impurities, (Simplified)	58.154 35.830 6.016	55.030 35.075 9.895	50.311 40.350 9.339	54.561 37.735 7.704	54.185 38.580 7.235
Fixed Carbon*	62.09	61.07	55.49	59.11	58.41
Volatile Hydrocarbons	37.91	38.93	44.51	40.89	41.59
$\frac{C}{V.\ H\text{-}C.}$	1.64	1.57	1.24	1.20	1.40

TABLE XIII.—PITTSBURGH BED, LOWER BENCH, WASHINGTON CO., PA.

	33 Neil's.	34 J. White's.	35 J. Magee's.	36 N. Eagle Works.	37 Liddel's.
Fixed Carbon	60.414	37.979	40.253	58.167	56.829
Volatile Hydrocarbon	34.655	34.125	38.720	35.275	36.880
Water	1.120	1.290	1.130	1.140	1.425
Sulphur	0.766	0.586	3.722	0.785	0.796
Ash	3.045	6.020	16.175	4.660	4.070
Sum	100.000	100.000	100.000	100.000	100.000
Coke	64.225	64.585	60.150	63.585	61.695
Color of Ash	Gray.	Cream.	Red.	Gray.	Gray-red tinge.
Fixed Carbon, Volatile Hydrocarbons, Impurities, (Simplified)	60.414 34.655 4.931	57.979 34.125 7.896	40.253 38.720 21.027	58.167 35.275 6.558	56.829 36.880 6.291
Sum	100.000	100.000	100.000	100.000	100.000
Fixed Carbon†	63.54	62.94	59.97	62.24	60.64
Volatile Hydrocarbons	36.46	37.06	49.03	37.86	39.36
$\frac{C}{V.\ H\text{-}C.}$	1.74	1.69	1.04	1.65	1.54

* Fixed carbon + volatile combustible matter taken = 100. Other constituents of the coal neglected.

† Fixed carbon + volatile hydrocarbons = 100.

TABLE XIV.—PITTSBURGH BED, MAIN BENCH, GREENE CO., PA.

	38 Maple Farm.	39 L. Vernon.	40 P Ashwist's
Fixed Carbon	59 051	55.608	48.769
Volatile Hydrocarbons	36 490	37.225	40.995
Water	1.030	1.040	1.010
Sulphur	0.819	0.982	1.206
Ash	2.610	4.145	7.020
Sum	100.000	100.000	100.000
Coke	62.480	61.735	57.995
Color of Ash	Cream.	Cream.	Red.
Fixed Carbon, Volatile Hydrocarbons, Impurities, Simplified	59.051	56.608	48.769
	36.490	37.225	40.995
	4.459	6.167	10.236
Sum	100.000	100.000	100.000
Fixed Carbon*	61.80	60.33	54.33
Volatile Hydrocarbons	38 20	39 67	45.67
Sum	100.00	100.00	100.00
C / V. H-C.	1.61	1.52	1.19

TABLE XV.—PITTSBURGH BED, BENCH NOT STATED.

	41 Greene Co.	42	43	44 Washington County.	45
	Dr. Mullin's Low'r B'nch	Harding's Shaft.	T. Thompson's Bank.	Th's Radd's Bank.	Frick & Co. Average.
Fixed Carbon	52.649	57.063	55.033	55.920	59.616
Volatile Hydrocarbons	38 390	37.825	39.790	38.525	30.107
Water	0 900	1.540	1.095	0.680	1.260
Sulphur	1.941	0.762	1.172	0.855	0.784
Ash	6.120	2.810	2.910	4.020	8.233
Sum	100.000	100.000	100.000	100.000	100.000
Coke	60.710	60.635	59.115	60.795	68.633
Color of Ash	Reddish-gray.	Cream.	Gray.	Red.	Reddish-gray.
Fixed Carbon, Volatile Hydrocarbons, Impurities, Simplified	52.649	57.063	55.033	55.920	59.616
	38 390	37.825	39.790	38.525	30.107
	8.961	5.112	6.442	5 555	10.277
Sum	100.000	100.000	100.000	100.000	100.000
Fixed Carbon*	57.83	60.14	58.82	59.21	66.44
Volatile Hydrocarbons	42.17	39.86	41.18	40.79	33·56
Sum	100.00	100.00	100.00	100.00	100.00
C / V. H-C.	1.37	1 50	1.42	1.45	1.98

* Fixed carbon + volatile combustible matter taken = 100. Other constituents of the coal neglected.

TABLE XVI.—PITTSBURGH BED IN SOMERSET COUNTY, PA.

	46 Saylor's Hill Mine.	47 Cumberland and Elk Lick Co. Mine.	48 Keystone Coal Mining Co.	49 Livingood & Kelm.
Fixed Carbon	66.510	69.352	70.231	68.774
Volatile Hydrocarbons	19.965	21.470	19.610	22.350
Water	1.630	1.385	1.058	1.665
Sulphur	0.775	0.763	0.761	1.246
Ash	11.120	7.030	8.340	5.965
Sum	100 000	100.000	100.000	100 000
Coke	78 405	77.145	79.340	75.985
Color of Ash	Gray-red tinge.	Gray-reddish.	Gray.	Gray-pink tinge.
Fixed Carbon, Volatile Hydrocarbons, Impurities, } Simplified	66.510 19.965 13.525	69.352 21.470 8.178	70.231 19.610 10.159	68.774 22.350 8.876
Sum	100.000	100.000	100.000	100.000
Fixed Carbon	76.91	76.36	79.73	75.47
Volatile Hydrocarbons	23.09	23 64	20.27	24.53
Sum	100.00	100.00	100.00	100.00
$\frac{C}{V. H\text{-}C.}$	3.33	3.23	3.93	3.07

TABLE XVII.—PITTSBURGH BED IN SOMERSET CO., PA.

	50 E. Yoder's.	51 Wilhelm's Low.Bench.	52 Wilhelm's The Rider.	53 J. Beechy's.
Fixed Carbon	69.677	66.907	69.986	69.016
Volatile Hydrocarbons	21.285	21.000	21.450	21.010
Water	1.465	1 190	1.570	1.680
Sulphur	0.693	0.713	0.679	0 764
Ash	6.880	10.190	6 315	7.530
Sum	100.000	100.000	100.000	100 000
Coke	77.250	77.810	76.980	77 310
Color of Ash	Reddish-gray.	Reddish-gray.	Reddish-gray.	Gray-red tinge
Fixed Carbon, Volatile Hydrocarbons, Impurities, } Simplified	69.677 21.285 9.038	66.907 21.000 12.093	69.986 21.450 8.564	69.016 21.010 9.974
Sum	100 000	100.000	100.000	100.000
Fixed Carbon	76.60	76.11	76.54	76.64
Volatile Hydrocarbons	23 40	23.89	23.46	23.36
$\frac{C}{V. H\text{-}C.}$	3.27	3.10	3.26	3.28

The following are some ratios, calculated from the analyses made for Professor Stevenson, and published in his report. It should be stated that many of the analyses from this report are included among the tables given above, which were provisionally arranged in their

present order by Professor Lesley to show the modifications of composition which take place in different parts of the same coal bed, and which become very apparent when expressed in the terms of fuel ratio, as an inspection of the fuel ratios of the Pittsburgh bed in Washington and Somerset counties will show. The localities of many of the coals which here follow are the same as localities previously given, but when the analyses were not identical it has been considered worth while to place its fuel ratio here.

TABLE XVIII.

	Analyst.	Fixed Carbon.	Volatile Hydrocarbons.	$\frac{C}{V.H.C.}$
1. Henderson, near Taylortown, Buffalo Township, Greene Co., Pa	A. S. McCreath.	55.01	44.99	1.22
2. Sayre's, below Waynesburg, Franklin Township, Greene Co., Pa	"	54 66	45.34	1.20
3. L. Vernon, Jefferson Township, Greene Co., Pa.,	"	58 41	41.59	1.40
4. Liddell, Centreville, Jefferson Township, Washington Co	"	60.64	39.36	1.53
5. West Greenfield, Jefferson Township, Washington Co., Pa	"	63.09	36.91	1.70
6. T. Redd, Fallowfield Township, Washington Co., Pa	D. McCreath.	58.81	41.19	1.42
7. Thomas, Peters Township, Washington Co., Pa.,	A. S. McCreath.	55.49	44.51	1.24
8. Mrs. Bushfield, Cross Creek Township, Washington Co., Pa	D. McCreath.	59.11	40.89	1.44
9. Patterson (roof coal), Centreville, Cross Creek Township, Washington Co., Pa	"	58.32	41.68	1.39
10. Jefferson County, Ohio	Wormley.	61.45	38.55	1.59
11. Belmont County, "	"	63.46	36.54	1 73
12. " " "	"	66.14	33.86	1.95
13. Harrison " "	"	63.46	36.54	1.73
14. " " "	"	64 93	35.07	1.85
15. Athens " "	"	60.92	39 08	1.55
16. Pomeroy " "	"	62.33	37.67	1.65
17. Potter's Bank, Raccoon Township, Beaver Co., Pa	A. S. McCreath.	58.07	41.93	1.38
18. Swearingen's, Hookstown, Beaver Co., Pa	"	58.05	41.95	1.38
19. Todd's Bank, " " "	"	54.08	45 92	1.17
20. " " " "	D. McCreath.	59.03	40.97	1.44
21. Wilson's Shipping Point, " "	A. S. McCreath.	54 61	45.39	1.20
22. Diehl's Bank, Georgetown, " "	"	40.68	59.32	0.68
23. Bryan's Bank, " " "	"	62.57	37.43	1.66

No. 1 is of the Washington Bed.
" 2 is of the Waynesburg Bed.
" 3 to 9 inclusive is of the Pittsburgh Bed.
" 10 to 16 inclusive is of the Pittsburgh Bed in Ohio.
" 17 to 21 inclusive is of the Upper Freeport Bed in Pennsylvania.
" 22 and 23 are of the "Ship Coal."

On comparing the first two tables it will be observed that Rogers has slighted his own general classification in the examples he furnishes of its various members, for if a semi-anthracite be characterized by a greater percentage of volatile combustible matter than a hard dry anthracite, then Nos. 1, 3, 4, 5, and 6 of Table II, do not belong

there, since No. 16, Table I, has a higher percentage of volatile combustible matter than any of them, according to his own tables.

But it is not in examples of this kind, where superior coals have been selected and submitted to analysis, that the urgency of a better basis on which to arrange them, becomes most apparent. It matters not whether the article for which a place in the category is sought be a commercial commodity or not, its relation to the purer varieties of its own kind should be plain. An example will suffice to illustrate this.

A recent examination of the carbonaceous slates, known as the Hudson River group, and which form extensive terraces along the flank of the North or Kittatinny Mountain in this State, rendered it interesting to ascertain the quantity of carbon present in those slates, and also its nature. These slates, hundreds of meters below the true carboniferous strata and the carbon associated with them, with the underlying lower Silurian limestone, and with the still lower Huronian or Laurentian rocks, have generally been considered to be graphitic, or at the least anthracitic.

Analysis, however, proved that these black strata contain about 3 per cent. of volatile combustible matter, 5 per cent. of fixed carbon, and 92 per cent. of impurities. If we neglect the latter the slate will by reason of its percentage of volatile hydrocarbons come under the head of the hard anthracites, whereas from the point of view above maintained the carbonaceous matter will be found to have the surprisingly high bituminous character of C 62.5, Vol. H-C. 37.5, a percentage hardly averaged by our best gas coals.

If it be true that a coal bed in its several parts, having been derived from mainly the same kind of vegetation (within reasonable limits of space) and being subjected to the same physical treatment within these limits, preserves a uniformity of composition in the product of that vegetation, some such method as this for withdrawing the accidents of the problem would seem to be an important means of identifying the same bed. For though the woody fibre may change into coal at the same rate in all parts of the same bed, the resulting coal will not be the same according to the presentation of it by the ordinary method of proximate analysis, unless the pressure and the resulting structure of the mass are the same; unless the waters and the infiltrating salts are the same in amount and kind; unless, in fact, all the accidents of a coal bed become essentials, which they never can do.

The argument of basing the definition of coals on the ratio between

their percentages of fixed carbon and volatile hydrocarbons, is founded upon the assumption that all other constituents than those of the fuel, *i. e.*, carbon and hydrocarbons, are adventitious and accidental, and liable to be influenced by causes operating after the extraction of the coal from the mine. It is true that the coal plants themselves probably contained in their tissues silica, sulphur, water, etc., and may have contributed in some cases the larger portion of these substances which are found in the coal, but this does not alter the value of the method proposed. Each kind of vegetation, no doubt, produced its own kind of coal; but, over wide tracts, the resulting mass, from similar conditions of overflowing, imbedding, pressure, and heat, would be practically the same *in the large*, while individual differences might be found in every mine (notably where a horse, a slate-parting, and the like occurs).

But there is an essential difference in the result between two distinct causes of variation, *i. e.* (1), variation in the nature of the plant (2), variation in the mechanical treatment to which the coal has been subjected. In the former case, the coal is a *different* coal; in the latter, a more impure variety of the *same* coal, as a deduction of its mechanical impurities and its fuel ratio will demonstrate.

If these tables here given may be taken as proper bases of the classification which essays to represent them, the definitions of these classes would be as follows:

An anthracite coal is one in which the ratio of fixed carbon to volatile (combustible) matter may vary between the proportions 99 C: 1 V. H-C (theoretically, of course, 100 : 0), and 89 C: 11 V. H-C.

A semi-anthracite is a coal in which the ratio of the fixed carbon to the volatile combustible matter may vary between the proportions 93 C: 7 V. H-C, and 84 C: 16 V. H-C.

The semi-bituminous coals are those in which this proportion varies between 84 C: 16 V. H-C. and 81 C: 19 V. H-C.

The bituminous coals are those in which the proportion may vary between 80 C: 20 V. H-C. and 47 C: 53 V. H.-C. To recapitulate:

TABLE XIX.

Kind of Coals.	Between proportions.	
	C V. H-C.	C V. H-C.
Anthracite, ...	99 : 1	89 : 11
Semi-anthracite, ...	93 : 7	84 : 16
Semi-bituminous, ...	84 : 16	81 : 19
Bituminous, ...	80 : 20	47 : 53

On viewing this last small table, it will be at once seen that the

classes overlap each other, and one is compelled to suppose that the coals which thus intrude on each other have some physical peculiarities which ally them to the class into which they come and separate them from the other. It will be in vain that we look for such distinguishing features, however, and the whole truth is, that the definition is based partly upon geographical and partly upon chemical characteristics. It is a repetition of the old difficulty experienced by mineralogists of defining classes by other than strict chemical characters.

So long as no third term (*i. e.* percentage of water) is employed, the general results of these tables permit a very simple expression on Professor Johnson's plan of fuel ratios. As a result of the digestion of all the above tables, we have, from experiment:

	$\frac{C}{V.\ H\text{-}C.}$		
Hard dry anthracite,	67.02	to	8.64
Semi-anthracite,	12.75	to	5.41
Semi-bituminous,	11.41	to	4.52
Bituminous,	8.98	to	0.68

(Theoretically, of course, the first term of the left-hand column would be 100, and the last term of the right-hand column, 0.)

In Rogers's system, the greatest confusion will be found to exist in the *semis*, a term which of itself implies a subordinate value in the system. First the semi-anthracite encroaches upon the anthracite to the extent of 50 per cent. of its entire range.

But worse than this, the semi-bituminous covers the whole space assigned to the semi-anthracite, and actually encroaches upon the "*hard-dry anthracite*," about 40 per cent. of its entire range.

Such a state of our nomenclature cannot but interfere with that most desirable of all aids in the investigation of truth, a distinct and sharp definition of terms.

Would it not be as well to assign their places to these coals by fuel ratios, thus avoiding the perplexing variations of impurities, somewhat as follows:

	$\frac{C}{C.\ H\text{-}V.}$		
Hard-dry anthracite,	100	to	12
Semi-anthracite,	12	to	8
Semi-bituminous,	8	to	5
Bituminous,	5	to	0

It is true that the same objection might be found to this which

was raised against the new iron nomenclature: that persons who had previously been selling coal, varying from 12 to 8 $\frac{C}{V.\ H\text{-}C}$ as anthracite, would resent the prefix of semi. But if, in the rectification of our boundary line, our neighbor's well is found on our land, it may be sad for him, but it is nevertheless an unalterable fact.

It should be remarked, in conclusion, that so long as this point of view is selected for viewing coals, it is indifferent whether the per cent. of C, or the per cent. of V. H-C, or the quotient of one divided by the other, be selected as the best means of classification, since one of the first two data being given, the other two can be calculated; but this is a very different thing from basing the classification upon the percentage of C or V. H-C, when the comparison of their sum with the impurities is neglected.

NOTE ON THE MANUFACTURE OF FERROMANGANESE IN THE BLAST FURNACE.

BY F. VALTON, PARIS, FRANCE.

(Read at the Wilkes-Barre Meeting, May, 1877.)

In the number of the *Engineering and Mining Journal* for April 7th, 1877, Mr. W. P. Ward, of Cartersville, Georgia, explains in a very interesting manner, the results he obtained in the manufacture of ferromanganese in the blast furnace. These results may be summed up as follows:

Production in the blast furnace of an alloy containing 67.2 per cent. manganese and 3 per cent. of carbon at most, with a utilization of the manganese amounting to 58 per cent.

With the exception of the indicated proportion of carbon, which should be almost doubled to express the true state of facts, we would have had no observations to make on Mr. Ward's paper had he taken into account the results obtained in the same line in other centres of production.

Before 1870, spiegel with 8 or 10 per cent. manganese only was known among blast-furnace products. In a journey to Sweden, in 1871, I ascertained that the Schysshyttan works manufactured regularly a spiegel with 18 per cent. manganese. Later, at the Vienna Exhibition, in 1873, the Sava and Jauerburg works, in Carniola, presented to the jury a ferromanganese, obtained in the blast fur-

nace, having 33 per cent. manganese. I say *ferromanganese* purposely, because above 25 per cent. this alloy should change its name; the properties of iron are then so much concealed that the magnet has no longer any power. These works have improved their manufacture and reached 45 per cent.

About 1875, several French works tried the manufacture of ferromanganese in the blast furnace, and fully succeeded. It must not be forgotten that at the Philadelphia Exhibition, there was some 60 per cent. blast-furnace ferromanganese made by the St. Louis works of Marseilles. The Terrenoire Company had even sent an alloy with 75 per cent. of manganese made in the same way. We will add that in this last case the utilization of the manganese employed amounted to 70 per cent. in a product made regularly and truly commercially.

CAN WE TRANSMIT POWER IN LARGE AMOUNT BY ELECTRICITY?

BY N. S. KEITH, NEW YORK CITY.

(Read at the Wilkes-Barre Meeting, May, 1877.)

THIS question is suggested by a statement made by Dr. Siemens, widely printed in the journals of the day, that a continuous rod of copper, thirty miles in length and three inches in diameter, is capable of conveying that distance, electrically, energy equal to 1000 horse-power. It is not attempted to advance the statement that the source of power shall be zinc, nor even coal, but waterfalls, which from their situation are not practically available for manufacturing establishments in their immediate vicinity.

In order to fully consider this subject, we must understand the doctrine, I may say the science, of the correlation of the forces, so called. We must understand that all matter is endowed with an amount of *force*, and that each atom and molecule, simple and compound, has its specific portion of the whole. This force, at rest, is called latent heat, intrinsic energy, or potential. In motion it is called heat, light, electricity, chemical affinity, attraction, magnetism, power, etc., according to its sensible manifestations. These are the effects of the one force active in different substances, or in different assemblages of matter. Force put in motion comes to rest by reason of the resistance to motion which it encounters; in overcoming

resistance the manifestation is sensible heat. Each of these manifestations of force is convertible to one or all of the others, and they are all caused by some mode of motion. Force may be illustrated by a spring under tension, or by a suspended weight. Release the spring and weight, and they give off as much force or energy as was used in setting up the tension of the spring, and in raising the weight perpendicularly the length of its fall. Any of these forces then may, figuratively speaking, release the weight and spring.

While there is but one electricity, there are two conditions of it, namely, *static*, which is electricity at rest but under high tension, and *voltaic* electricity or *galvanism*, which is a mode of motion. It has but one cause, and that is active force, or matter in motion. Yet we, for perspicuity, call electricity by friction, *static* or *frictional;* electricity by chemical affinity, *chemical*, from its immediate cause, or *voltaic* or *galvanic*, from its discoverers; electricity by magnetism, *magnetic;* electricity by heat, *thermic;* electricity by mechanical power, *dynamic*.

Since chemical and thermic electricity have too costly sources for our purpose, we must consider the magnetic and dynamic.

Now that we have learned what electricity is, we must understand what it is not. As an entity it does not exist; it is a signification simply. When we comprehend it as a condition or quality of matter in self-containing motion, not as a current or flow of something through matter, we will be able to deduce facts in the science, and sustain them by practical illustration. The first conception by the mind of a force or motion having its source within a circuit, and manifesting itself at all parts thereof, is that of a current or flow of something. The probability is, electric current is molecular change of form caused by tension upon the atoms composing the molecules in the direction of disrupting them. There is certainly a change of dimensions of matter subjected to electricity, as there is with heat and magnetism. This change of form causes friction of adjacent molecules and its resultant heat. This heat is the exact equivalent of the energy causing the electric current. Energy, when used as electricity, is called *electromotive force;* this varies in degree with its tension, as in case of its illustration by a weight in suspension, or by a spring. Some use the term *intensity* to express the same. The tension of a spring may illustrate the electromotive force of static electricity, which imparts its charged energy with a single impulse. A suspended weight released increases its speed each foot of fall, and consequently its force and effective quantity. So with voltaic elec-

tricity: each cell in circuit increases the speed and quantity of current. In case of dynamic electricity, each increment of circuit receiving electric impulse adds to speed and quantity of current.

All matter offers an amount of resistance to changes of form or arrangement of molecules, whether by heat, electricity, magnetism, or any other of the forces. This resistance is specific for each substance. The specific resistances opposed to electromotive force have been tabulated relatively in the cases of metals common in the arts, and with the important alloys. The metals are the best conductors, or, in other words, offer the least resistance. Then follow solutions of binary salts, other liquids, *et sequentia.* Copper and silver offer the least resistance, are relatively alike, and are graded as 1 in scale of resistances. Iron offers nearly six times the resistance of copper, and is graded 5.95. Heat increases the resistance of metals to the extent of about 0.2 of 1 per cent. for each degree Fahrenheit rise in temperature.

Electricians have a formula which sets forth Ohm's law. This is that the current (sometimes called quantity) of electricity is the result obtained by dividing electromotive force by resistance; thus, $\frac{E}{R} = C$.

The unit of electromotive force is called a *volt*, in commemoration of Volta, the inventor of the voltaic pile. It is very nearly represented by the electromotive force, or energy, or intensity of a Daniell cell. The unit of resistance is called an *ohm*, after Ohm, who laid down the law. A wire of pure copper, 6046.5 feet in length, and $\frac{1}{4}$ inch in diameter, has a resistance of one ohm. The unit of a current or quality is called a *weber*, or *veber*, after Weber, another investigator in the line.

A weber of current represents the energy set free by the combustion of 11 grains of carbon, or 11 grains, about, of coal, or 1 grain of hydrogen, with a development of 6 units of heat in 6338 seconds. That amount of free or sensible heat is set free in the circuit. Thus, one volt of electromotive force forces one weber of electric current through a circuit of one ohm resistance, requiring to do so 4673 foot pounds of energy, with a development of 6 units of heat in the circuit in 6338 seconds. The heat set free is the exact measure of the force used.

If we pass this weber of current through a solution of copper sulphate, the electric equivalent amount of metallic copper will be deposited, namely, 31.75 grains in the same time. Now, if we

increase electromotive force by adding another cell in the circuit, making electromotive force 2, and so regulate resistance that it remains one ohm, a current of 2 webers passes in the same time, thus: $\frac{2\,E}{1\,R} = 2\,C.$

Now we find that twice as much zinc is consumed in each cell, or four times as much in the circuit, or its equivalent in energy is used in depositing only twice as much copper. We have in the circuit four times as much heat, which is the measure of the energy expended. Chemical decomposition is the measure of current, while heat is the measure of electromotive force multiplied by current. Increase electromotive force to 3, keep resistance 1, and we have current of 3, and nine times the energy expended, resulting in nine times the heat.

It is now to be seen that by increasing definitely the amount of electromotive force, and at the same time keeping resistance as low as possible, we may use a definite amount of energy, and distribute it as heat throughout the circuit in proportion to the special resistance of its parts, and utilize it as mechanical power. The object of increasing E at the expense of C is that we may save in weight of copper constituting the conductors. We get the energy distributed throughout the circuit, though but the square root of it is shown in chemical action when measured by the amount of copper or other metal deposited in a single depositing cell.

If we magnetize a core of soft, non-carburized iron, within a coil of copper wire, by bringing it into the magnetic field of an electro or a permanent magnet, at the instant of stoppage of motion, a current of electricity will start in the coil in one direction; that is, the molecules composing the circuit will turn in one direction, and then the action ceases. Remove the core and coil, a reverse l current starts and continues as long as motion lasts in removing them from the field. If we revolve this arrangement between the poles of a magnet, thus alternately magnetizing and demagnetizing the core, we will get a succession of discharges of magnetism through the copper coil utilized as electricity. While the core is acquiring magnetism there is no current in the coil, as there is no magnetic resistance to motion which requires force to overcome. As soon as it begins to lose magnetism an electric current is induced in the coil, which we may cause to do work by proper mechanical appliances.

We will find that the coil and core are heated, and the amount of heat is the measure of the mechanical force used, less that due to

friction of the journals carrying the arrangement. If the coil completes the electric circuit within itself, so that there is no external resistance, then the total heat will be developed therein. If the circuit is made complete by a conductor, then the heat will be divided between the coil and conductor in proportion to their respective resistances. If this conductor be the coils of an electro-motor, the heat due to it can be utilized as work, less loss by conversion.

We have now the general requirement laid down, so we will proceed to plan and construct a theoretical machine to suit the requirements of 1000 horse-power, to be transmitted, if possible, through a rod of copper, thirty miles in length and three inches in diameter. As resistance of wire of same diameter is in direct proportion to its length, and as we have seen that 6046.5 feet of copper wire, one-quarter inch in diameter, has a resistance of 1 ohm, so 30 miles, or 158,400 feet of one-quarter inch wire, has 26 ohms resistance. But, as it also decreases in proportion to the square of the diameters, we figure in the three-inch rod a resistance of .18 ohm, if of pure copper, at a temperature of 60° Fahr.

The energy of 1000 horse-power is measured at 33,000,000 foot-pounds per minute, and that of one weber current equals 4673 foot-pounds in 6338 seconds, or 44.24 foot-pounds per minute. So it will require 746,000 webers current, or their equivalent in energy, to utilize 1000 horse-power as electricity for dynamic purposes.

We may, therefore, use electromotive force of 1000 volts, resistance of 1.34 ohms, and a current of 746 webers; thus $\frac{1000E}{1.34\ R} = 746$ C. In other words, the dynamic equivalent of 746,000 webers may be had by multiplying the electromotive force 1000 by the current 746.

It has been found that a discharge of the magnetism of a soft iron core induces a current in the coil surrounding it, possessing electromotive force of one volt for about each twenty-five feet of coil. The quantity or current comes from the strength of the magnetism and number of discharges. For 1000 volts electromotive force we will take 25,000 feet in length of copper wire or strips, weighing 1.2 pounds per foot length, or in all 30,000 pounds. This will have a resistance of .66 ohm. It should be wound upon a core of iron weighing 10,000 pounds. This core and coil, constituting what is called an armature, must be revolved between the poles of an electro-magnet having such an attraction for the armature as to call for the expenditure of 1000 horse-power in revolving it. Such a magnet will

weigh, probably, 60,000 pounds, and have a like weight of copper in its coils. It should be excited or magnetized by a smaller armature revolved between the poles of a smaller magnet, with an expenditure of, say, 100 horse-power. This is necessary, because, if the coil of the magnet is part of the main circuit, the resistance will be much increased.

The electromotor receiving the current of electricity must have at least the same length of copper in its coils; and as the resistance of the coils (when the machine in motion is exerting its greatest power) is double that which they have at rest, and as it is necessary from our other fixed resistances to make the resistance of the machine .50 ohm, we make the weight of copper coils per foot 3.17 pounds, a total of 79,200 pounds, with a weight of iron about 70,000 pounds.

The cost of this apparatus will be as follows:

Exciting magnet and armature:	$3,500
Large magnet, 60,000 lb. iron, including work thereon, 10c. per lb.,	6,000
60,000 lb. copper, 30c. per lb., ...	18,000
Armature: 10,000 lb. iron, and work thereon, 10c. per lb., . .	1,000
8,000 lb. copper, 30c. per lb., ...	9,000
Brass bearings, brushes, etc., ...	2,500
Total for machine, ...	$40,000
Conductor: 158,400 feet copper rod at 27½ lb. per foot, 4,356,000 lb.,	
30 cents, ...	$1,306,800
Ground plates and connections, ...	5,000
Insulation, etc., indefinite, say, ...	100,000
Total for conductor, ...	$1,411,800
Motor: Iron and work, 70,000 lb., 10c., ...	$7,000
Copper, 79,000 lb., 30c., ...	23,700
Brass, brushes, etc., ...	2,500
Total for motor, ...	$33,200

The energy of 1000 horse-power expended on the machine generating the electric current is distributed throughout the circuit in proportion to the special resistances of the several parts. The armature, having a resistance of .66 ohm, absorbs 66-134 or 492.5 horse-power; the conductor 18-134 or 134.3 horse-power; the motor 50-134 or 373.2 horse-power. This last amount is all that can be utilized with this arrangement, even if there is no loss. We may make our electric machine and the motor larger, or place two of them, making the resistances of them one-half as much, but not with any increase of utilizable power, as the resistance of the conductor remains the same.

Let us consider a resistance of .33 ohm for machine, .18 ohm for conductor, and .25 ohm for motor, and we have 33-76 or 434 horse-power for machine, 18-76 or 237 horse-power for conductor, and 25-76 or 329 horse-power for motor. This is less available power than before. The resistance of the earth returning the current we may count as nothing. Under no circumstances can we utilize the full power expended.

If we decrease the resistance of the machine to .33 ohm, and increase that of the motor to .83, keeping total resistance the same, we will gain. Then the machine will absorb 33-134 or 246.2 horse-power; the conductor 18-134 or 134.3 horse-power; and the motor 619.5 horse-power. With a larger conductor or shorter distance, this proportion may be increased.

There are various sources of loss, especially with electricity of such electromotive force and tension. I have no doubt that at least 50 per cent. of the energy expended on a magneto-electric or dynamo-electric machine at a waterfall may be used at a distance by an electro-magnetic motor as mechanical power.

The amount of heat developed throughout the entire circuit will be equivalent to that from the combustion of 200 lbs. of coal per hour, or 42.746 heat units per minute. That proportion due to the armature, having resistance of .33 ohm, is sufficient to raise its temperature one degree Centigrade per minute. Of course, then, some arrangement for cooling by water must be applied. What the effect of a discharge of a portion even of this current, with its high tension, through the body of a man would be, I leave you to imagine.

COPPER BY ELECTRICITY.

BY N. S. KEITH, NEW YORK CITY.

(Read at the Amenia, Meeting, October, 1877.)

SOME time ago, a firm engaged largely in the manufacture of copper sulphate, applied to me for information as to the practicability of obtaining the copper from their mother liquors by means of electricity; having reference, more especially, to obtaining the electric current from some magneto-electric or dynamo-electric machine.

The mother liquors were the result of several solutions of commercial scrap copper, containing impurities, the quantity of which

in the liquors had increased by the operations until too large to allow the formation of pure, or even merchantable copper sulphate. There were silver, nickel, tin, zinc, antimony, and iron sulphates in solution, besides enough copper sulphate to represent 4½ per cent. of the total weight of solution as metallic copper. The question was: "Can we obtain this copper in a cheap, practicable, and expeditious way by the agency of electricity?"

They had tried experiments so far as to determine to their own satisfaction the previously known fact, that the copper could be deposited by electricity; requiring, however, to do so, three cells of a gravity battery, say an electromotive force of three volts. A less electromotive force would not accomplish it.

Knowing, then, this fact, it was necessary to employ a machine to produce electricity of at least that amount of electromotive force, and of a size to offer a small resistance to the electric current generated, and depositing vessels large enough to accommodate the amount of liquor, and large enough electrodes to make the resistance low; so that the combined resistances of machine, conductors, electrodes, and liquors were low enough to allow sufficient current to flow, all in obedience to Ohm's law, which is formulated thus:

$$\frac{\text{Electromotive force}}{\text{Resistance}} = \text{Current.}$$

Further, electrotypers carry on their art of depositing copper electrically by the use of batteries having, say, half a volt electromotive force. Why, then, is it necessary to use three volts—nearly six times as much, to deposit copper in this case?

Electrotypers use a copper anode which is dissolved, and by its solution as much force is set free in the electric circuit as is absorbed by the deposition of a like amount of copper on the cathode. So, as no force is set up against the electric force, the weakest battery is capable of depositing some copper. The practical point with the electrotyper is a speed of deposit which gives him a coherent, reguline shell of copper in the shortest possible time, with the least expenditure of force. As that force for his use exists in zinc and acid, or in the mechanical motion applied to a dynamo-electric machine, he uses one or the other, according to the extent of his information or the condition of his pocket. The machine would undoubtedly give him equal current for less than one-tenth of the cost by use of zinc and sulphuric acid. The consumption of an electric equivalent (65 grains) of zinc in a single Smee cell, will give a deposit in a

copper-depositing cell, with soluble anode, of an equivalent (63.5 grains) of copper. If we substitute an insoluble anode, to completely deposit the copper, we must place six Smee cells in series, in order to have an electromotive force at our command of three volts; consequently we will use 65 grains of zinc in each cell, or 390 grains in all, to get a deposit of 63.5 grains of copper. Thus, 325 grains of zinc are used in decomposing water, and setting free oxygen as gas at the insoluble anode—so much energy lost, so far as the practical result is concerned. Other cells, having greater electromotive force, like Daniell's, Grove's, Bunsen's, and the gravity battery, may be used with less waste of zinc. A single cell of the gravity battery employed, would give a deposit of copper to the electrotyper by the expenditure of equivalent of zinc for equivalent of copper.

The electromotive force of a battery-cell is the remainder after subtracting the force of the negative element from the force of the positive element. Thus in a Daniell cell the force of the union of 32.6 grains of zinc with SO_4, is 10,503 foot pounds; from that take the force of the union of equivalent copper with SO_4, 5878 foot pounds, and we have 4625 foot pounds, available force of a Daniell cell. Against that we have no force set up in the electrotyper's cell, since as much force is given by the solution of copper as is absorbed by its reduction.

In an arrangement for the complete deposition of copper from its sulphate solution, we have a counter-electromotive force equal to the difference between the forces of copper cathode and a platinum or carbon anode, and the force absorbed by the deposited copper at the cathode and the liberated oxygen at anode.

After these facts were considered, the question of choice of anode arose. If we use a copper one, we might go on indefinitely depositing copper without exhausting the solution, or liquor; if we use an anode of a metal electro-positive to copper, like zinc or iron, as soon as it is immersed in the solution it is immediately covered with a fine powder of metallic copper in the well-known way; so we might as well use those metals directly without the electricity. If we use copper matte for an anode, we will still be taking copper into the liquor as well as iron, etc. Now for the insoluble anodes—elements electro-negative to copper. Lead is cheap, but it soon covers with a thin film of insoluble lead sulphate, which offers a great resistance to the passage of the current. Carbon plates, made by causing gas-coal graphite to cohere, conduct the current well, but under the action

of the strong electromotive force, the oxygen, and SO_4, they rapidly disintegrate. Platinum seems to be the only resource. But platinum is expensive, and unless roughened by an electro-deposit of more platinum on its surface, offers great resistance, by reason of the retention of oxygen upon its smooth surface.

As it was desirable to deposit three pounds of copper per hour, it is necessary to use three pounds of zinc in each of three cells, or nine pounds in all, for each three pounds of copper produced. This was an expense of \$1.12½ per three pounds of copper, besides sulphuric acid, and labor, and waste, amounting to nearly as much more; rolled zinc suitable for batteries costing 12½ cents per pound. This makes rather expensive copper; say 60 cents per pound.

The expense by dynamo-electric machine was figured as follows: Force, or energy, of 9 lb. zinc, and equivalent of H_2SO_4, less force of equal amount of copper, is 9,105,469 foot pounds per hour, or about 4.6 horse power.

This is the amount of available force necessary under the conditions. A very few, if any, dynamo-electric machines utilize more than 50 per cent. of the force in foot pounds applied to them; double that number of foot pounds of force must therefore be applied, or 18,210,938 foot pounds per hour, equal to 9.2 horse power. This, with coal, attendance, etc., from an ordinary steam-engine, would cost 42 cents per hour for 3 lbs. copper, or 14 cents per pound; coal costing \$8 per ton in the locality.

I did not deem it advisable to place two or more depositing cells in series, since not only the resistance increased with each addition, but also the counter-electromotive force, so that would necessitate a change in the construction of the machine, so as to increase its electromotive force.

While canvassing the merits and demerits of iron as a soluble anode for the purpose, I tried a plan for the use of iron in reducing the copper, which proved very successful. After a short consideration the question arose, Why use a current of electricity when iron alone is sufficient to reduce copper from the solution? If I apply the current with an iron anode, copper will still be reduced upon it by local action, and I will have the same fine powdery deposit, the same formation of insoluble basic salts of iron mixing with the copper deposit, and the expense for producing the electric current. As these objectionable results seemed to arise from the direct contact and association of the iron, copper, and copper solution, as well as the iron solution already present and synthetically formed, I decided

to try to separate them, and did so by placing iron in a less than saturated solution of sulphate of iron (free from copper), contained in an ordinary porous cell, such as is used in various galvanic batteries. This porous cell and contents I placed in a large vessel containing some of the copper liquor and a sheet of metallic copper. I connected the iron and copper, external to the solutions, by means of a clamp, and the work commenced. In 36 hours the liquor was completely freed from copper, which was deposited upon the copper sheet as a beautiful velvet-like coat, pure, reguline, and coherent.

No formation of basic salt of iron; no copper powder; none of the defects of the ordinary precipitation of copper by means of iron. The expenditure of iron was but the equivalent for the copper deposited, namely, 56 of iron for 63.5 of copper. All the attendance requisite was for the occasional removal of some of the nearly saturated solution of iron from the porous cell, filling the space made with water.

There was then procured ten of the largest porous cells obtainable, ready made, and set up in series, that is, the iron of one connected with the copper of the next vessel, and so on through all, forming a ring or closed circuit. The result was the same, all the copper deposited in 36 hours. Eighteen large porous cells have been made, measuring 12 inches in diameter and 32 inches long, and large-sized oil barrels will be used for the vessels to contain the copper liquor. A modification of this arrangement calculated for the continuous treatment of cupriferous solutions places the vessels so that the solution may run from one to another through as many as may be needed to complete the deposition of copper. A low percentage of copper increases the speed of exhaustion. Scrap iron may be placed loosely in the porous vessel, and may be added from time to time to take the place of that which has been dissolved. It is necessary to remove portions of the solution of iron as it approaches saturation, in case it be desirable to save that material, and fill again with water, or part can be displaced by water, allowing it to overflow into the outer vessel. Speed of operation, as regards quantity, may be gained by increase of size and number of vessels.

In this way any concern, whether producing a gallon of copper solution, or thousands of gallons daily, may produce fine, merchantable copper by inexpensive apparatus at, say one cent per pound, more or less, as scrap iron may be worth more or less than $20 per ton.

NOTES ON FIRE-BRICK STOVES FOR BLAST FURNACES.

BY JOHN M. HARTMAN, PHILADELPHIA.

(Read at the Wilkes-Barre Meeting, May, 1877.)

Two systems are used for heating air in blast-furnace operations:

I. The double surface system, in which a cast-iron pipe is heated on the outer surface, and, at the same time, heats the blast from its inner surface. This is simple in operation and gives a continuous effect, but is limited by 1100° F. as a maximum temperature of the blast.

II. The single surface system, by which large surfaces of fire-brick are heated, and air passed over the heated surface, absorbing the heat and carrying it on to the furnace. This system is more complex than the double surface, as it involves the reversing of the air and gas every hour and a half.

The single surface system has two advantages:

1. The blast can be heated to a temperature of 1800° F.
2. The stoves are indestructible.

From recent experience it has been found that 1300° F. to 1400° F. is the best average temperature for economy of coal for safe working. This is equivalent to a saving of 1½ to 2 cwt. of coal per ton of iron over the extreme limit of cast-iron stoves.

Independently of this, it is a strong point in favor of this system that the blast can be raised to a temperature of 1800° F. within an hour when the hearth is getting cold. All furnacemen know the value of a hot hearth for quality and quantity of iron. Cooling of a hearth occurs from leaky tuyeres, scaffolds, or heavy burden.

When there is not sufficient coal at the tuyeres to seize on the oxygen of the entering air and convert it at once to carbonic oxide, there will not be enough heat to liquefy the cinder. Black cinder and poor iron are the results. The remedy is additional heat from the blast. If the stoves will give 1800° in place of 1100°, it is obvious that the furnaces will get around sooner, and without waiting for a change of burden at the tunnel head to bring extra coal to the hearth. The heat absorption caused by a leaky tuyere will chill the hearth and drive the zone of fusion higher up in the furnace. This loss must be supplied, and the calories lost to the hearth must be regained before good iron can be made.

Take another case: A furnace carefully burdened on No. 1 iron, during a spell of damp weather, goes on to No. 2 or No. 3. Heat is lost to the furnace through absorption by the moisture, and less burden must be carried in order to get back on No. 1. When the

weather clears up, this burden is too light, and, unless changed promptly, silicized iron is produced.

The difference between a dry and wet day in heat absorption is equivalent to two tons of coal per day, when using 10,000 cubic feet of air per minute. With stoves of good capacity an additional amount of air can be poured into a furnace to maintain its temperature and avoid change of burden or grade of iron. In the case of a furnace working a light burden and doing a carbon duty of 2.3 or 2.4, the difference above given would not be so appreciable, as there would be a large surplus of heat above actual requirements; but, when running on a carbon duty of 2.7 to 3, all these small differences must be closely watched, or the running of a furnace on light burden in these latter days will not pay.

For some years past we have been collecting results of brick stoves, and declining to give up the iron stoves until we could find good results from actual workings of the brick stoves both at home and abroad.

The Cedar Point Iron Company have demonstrated that they can save fuel by the brick stoves, and we find the failure at other places is due to the stoves being too small. The superintendent of the Cedar Point works, with a foresight not always found, put up large stoves, and to this is due his success so far as hot blast is concerned. They use four stoves, 22 by 30 feet, having a total heating surface of 35,200 square feet. The average temperature is 1375° F., with a maximum of 1750° F. They have four square feet heating surface to each cubic foot of air passing per minute, and get a carbon duty of 3.13 on a basis of No. 3 iron. They change a stove on the furnace every two hours. The gas escapes from the stoves at a temperature of 200° F.

At Rising Fawn, Georgia, with three stoves, 18 by 30 feet, and having 17,400 square feet of heating surface, they average but 1000° F. with 1200° F. for a maximum temperature. They have 2 square feet surface for each cubic foot of air passing per minute, and get a carbon duty of 2.35. The escaping gas goes off at a temperature of 650° F., which is a loss of 450° F. in the gas, and a loss of 375° F. in the blast. They change stoves every hour. This shows that economy is only to be obtained by using plenty of surface to absorb heat.

In stoves where brick walls are used to absorb heat, the thickness prevents the heat from the interior of the walls becoming available. It has been found that, when using 9-inch walls, and changing every

two hours, the exterior of the walls would become hot within three hours or so, if the heat was reduced to a minimum and the stoves were shut up. This was repeated twice in succession. This shows the necessity of thinner walls and increased heating surface, as the storage of the heat in the interior of the wall is not available in the time required to lower the temperature to the minimum. The slow conducting power of the fire-brick is the cause of it. The valves of the stove require the attention of a careful man.

Where a bell and hopper is used the escaping gas goes off at so low a temperature that there is no danger of harming the gas valve. When the heating surface is small, and the escaping gas goes off at a high temperature, the chimney valve must be cooled with water. The hot-blast valve is cooled either by water or cold blast. There are objections to the use of water, as it often causes explosions in case of leakage. It is advisable to use as few valves as possible, to prevent leakage and handling. The cleaning of the fire-brick stoves is no more difficult than that of cast-iron stoves. Scraping the walls and blowing off the dust by blast are the methods employed.

After a careful comparison of fire-brick stoves, we have taken up the Siemens-Cowper-Cochrane stoves as being the most simple and inexpensive in construction. These are the original Cowper stoves, modified by Dr. Siemens and Mr. Cochrane. These patents cover the use of all fire-brick stoves. The stoves consist of a wrought-iron shell, lined with, say, 18-inch brick; inside of the shell is a vertical, circular flame flue, say 4 feet in diameter by 14 inches thick. The flame flue is eccentric to and built against one side of the 18-inch lining. Around this flame flue are built the vertical regenerating cells. They are composed of split-brick, $1\frac{3}{4}$ inches thick on the edge, which leave a vertical opening of $3\frac{3}{4}$ by $3\frac{3}{4}$ inches from top to bottom. This cellular arrangement gives a large surface of contact, while the thinness of the walls admits of the heat being thoroughly abstracted, so that there is no waste storage, or heat stored that is not available in the $1\frac{1}{2}$ hours during which a stove is on the furnace. We propose three stoves, two on gas, one on the furnace, and to use 5 square feet heating surface to each cubic foot of air passing through the stove per minute. This will allow the escaping gas to go off at 150° F., which is important for economy, as the gases are less rich in carbonic oxide and less in volume as the burden and hot blast are increased at the furnace. The pressure of the blast at anthracite furnaces is double that where coke is used, and hence twice the gas will be required to generate steam for anthracite furnaces as compared with

coke furnaces. This shows the necessity of economy at every point. When one stove of a set, with 10,000 cubic feet capacity per minute, is heated up, it contains 127,631,000 F. calories, and the blast abstracts from it in 1½ hours 19,890,000 calories, or about one-sixth of the total amount of heat stored. The regenerator alone contains 63,223,200 calories when heated up, and not more than one-half its capacity will be exhausted, when clean, to give the blast the desired temperature. An excess of capacity is required in all stoves to allow for dust and the obtaining of higher temperatures in case of need. There are but five valves to operate, which is less than are used on other stoves. There being but one flame flue or combustion chamber, perfect combustion is secured with but one valve to admit air in place of a greater number on other stoves. The hot-blast valve is cooled by a small current of cold air. The absence of water in all of the valves is a strong point in their favor. By the use of two simple dust-catchers in the down flue, and by blowing through the ovens once a week, the Ebbw Vale works found their stoves to be as efficient at the end of two years as when started.

Mr. Cowper has found that the vibration caused in the passing current by firing a common gun into the stove while the blast is on is an efficient means for cleaning off the dust. The most effectual cleaning is done with a steel brush, weighted and attached to a small wire-rope, by dropping it down through each hole. By attaching the rope to proper pulleys with an index, the brush can be worked from the top without going inside. The projection of the brick in the regenerator cells affords a good opportunity for the collection of dust, and, as this point is objected to by the leading iron men who have examined the drawings, we propose bevelling off these corners. The thin walls of the regenerator offer to the gas and air five-sixths of their surface, while a brick built in a nine-inch wall offers only one-sixth of its surface. It is the dividing up of the air by the cells, bringing it into immediate contact with the heating surfaces that so effectually heats the blast. By the use of high stoves the currents are made more rapid, and thus much dust deposit is prevented.

No air-receiver is required where these stoves are used. As a variation occurs in temperature, owing to the changing of stoves, we propose using an automatic valve, by which a certain amount of cold air will be automatically mixed with the excess of hot air to bring it to the required temperature. By this means the excess of heat is retained in the stoves, and it acts over a longer time.

The cost of these stoves complete, when No. 1 fire-brick are $34

per thousand, is about $3 per cubic foot of air required per minute, and, if built to run only at 1100° F., they can be made at the same cost as iron stoves, and are more durable.

A furnace, when in a good condition, will take through per day a given number of tons of material. By increasing the hot blast coal can be taken off, while ore and limestone to the same extent can be added. This increases the yield, and decreases the amount of coal used. If a hotter blast is used, coal must be taken off proportionally, or it is wasted in the zone of reduction, escaping as gas, and not reaching the hearth.

Mr. Cochrane, of Dudley, England, writes that, after trials of from nine to eleven months, he finds the following results: "At a furnace 23 by 76 feet, with 20,000 cubic feet capacity, with the blast at 900° F., one ton of iron requires 25½ cwt. of coke; at 1100° F., 22½ cwt. of coke; at 1300° F., 20⅛ cwt.; and at 1500° F., 20 cwt. of coke; and in larger furnaces they get the consumption of coke even lower."

ON THE SOUTHERN LIMIT OF THE LAST GLACIAL DRIFT ACROSS NEW JERSEY, AND THE ADJACENT PARTS OF NEW YORK AND PENNSYLVANIA.

BY PROF. GEORGE H. COOK, STATE GEOLOGIST OF NEW JERSEY, NEW BRUNSWICK, N. J.

(Read at the Wilkes-Barre Meeting, May, 1877.)

AT first sight this subject seems to belong to pure theoretical geology, but examination will soon show that it has important practical and economic interest to the mining engineer. The conclusion that all the northern portions of our country, as well as of the eastern continent, have, in the later periods of geological history, been covered with a thick bed of ice, is now accepted by geologists. This bed of ice, except in its greater magnitude, was like the modern glaciers of the Alps, and other mountains which extend above the line of perpetual snow. The marks it has left upon the surface show that it was comparatively thin on its southern edge, but that its thickness was much greater a little further north, and that it was several thousand feet thick at its heaviest parts. This variation of its surface would give it a descending slope towards the south, and cause the mass of ice, like a semifluid substance, to move in that direction.

The effect of such an immense weight of ice moving over the surface is to produce the common and well-known phenomena of glacial action, in cutting and grinding away softer rocks, leaving the harder rock, with its worn and scored surface, underneath. The *débris* of the worn rock became, as it was carried forward by the moving glacier, the boulders, gravel, sand, and clay, which now cover so much of the surface of the continent north of 40° N. And the material which was shoved forward in front of the mass of ice, and which stopped when the melting of the glacier equalled its rate of movement, was left as the terminal moraine to mark the southern edge of this great continental glacier.

This terminal moraine, in the form of uneven hillocks of clay, sand, gravel, and boulders in great variety, still stands out well-marked, and as easily recognized as if only a few years' old. The failure to recognize it earlier has probably been owing to the occurrence of boulders on the surface south of it, and to the deposits of gravel, quartz, boulders, etc., considerably to the south of this line.

The line marking the southern limit of the drift may be traced across the State of New Jersey from east to west, beginning on the north side of the Raritan River, at Perth Amboy. The southern border of the belt of Short Hills, which extends from the last-named place to the First Mountain, marks this limit. It may be traced on the map just north of Metuchen, Plainfield, and Scotch Plains. It crosses the First Mountain and the valley between that and the Second Mountain, and then across the latter mountain a half mile or less south of Summit Station, on the Delaware, Lackawanna, and Western Railroad. From thence onwards across Passaic River, Long Hill, and, by Chatham and Madison, to Morristown, it continues to hold about the same distance to the south of the railroad. From Morristown onwards to Dover the line is more difficult to trace across the high grounds; but it can be seen on Morris Plains, near the State Lunatic Asylum, across the outlet of Shougum Pond, on Den Brook, and across the valley of Mill Brook, two miles southeast of Dover. At Dover it can be seen south of the main street and the railroad, on the side hill, and extending across the plain south of the Catholic church. It can be traced from there onwards south of Port Oram, and across the divide which separates Rockaway River from the head of Black River; and thence a little north of McCainsville and Drakeville, and across the hilly country just north of Budd's Lake, and so onwards to the Musconetcong Valley, which it crosses about a mile northeast of Hackettstown. It is marked by its hil-

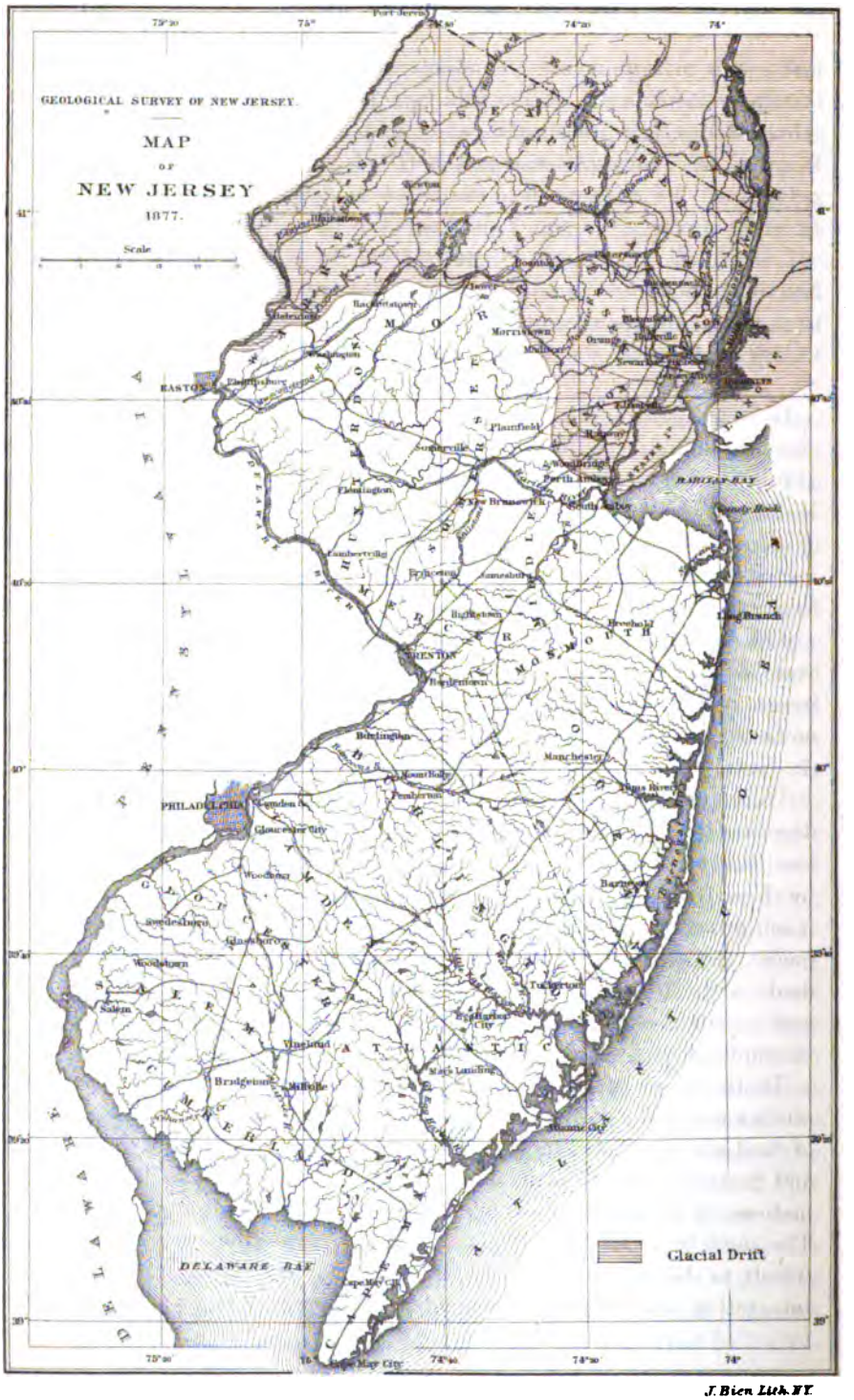

J. Bien Lith. N.Y.

locks, very plainly, across the mountain from the Musconetcong to the Pequest, just south of Townsbury. It is then seen on the north side of Jenny Jump Mountain, and again on the south side of the Pequest, near Butzville, and just north of the Presbyterian church at Oxford. From there on to the Delaware it can be traced through Belvidere to the river's bank, just north of the Pequest.

In Pennsylvania it can be traced from the Delaware, just above Marshfield Station, on the Delaware, Lackawanna, and Western Railroad, along the south side of the valley of Jacobus Creek to the village of Johnsonville, and from there on to the Blue Mountain, which it meets about three miles northeast of the Wind Gap.

In New York the line crosses Staten Island near its southern end, and then along its southeastern border, near the Great Kills, to Fort Tomkins, at the Narrows. On Long Island the line begins below Fort Hamilton, and extends between Brooklyn and Flatbush, just north of Jamaica, and following the south border of the line of hills, which marks the north shore of Long Island, it finally crosses southeasterly, to the Atlantic shore, a little west of Southampton.

The accompanying map of New Jersey shows the part of that State which has been covered by the glacial drift. It also shows the irregular line of its southern edge, and that it recedes towards the north somewhat in proportion as the ground is higher above the sea-level.

To the north of this line the surface is mainly covered with heavy deposits of drift material, some of which have been brought from localities many miles distant. Where the rock-surface is not concealed by this coating of drift, it is hard and unproductive. The soils are much mixed, and the miscellaneous collection of boulders of granite, gneiss, conglomerate, limestone, quartz, iron ore, etc., leave one in doubt as to the source from which such dissimilar rocks could have come. Some expensive mine-workings have been undertaken in consequence of finding these erratic masses of iron ore.

To the south of this line the regular geological formations are much more thinly covered with the soil. There are some light banks of sand and fine gravel, but no masses of glacial earth and boulders, and generally the soil is derived from the underlying geological formations, and only changed by air, rain, drainage, vegetation, etc. The most remarkable difference, however, is in the rock-surface, which, to the south of this line, shows so much of the effects of disintegrating and decomposing agents. The granitic rocks are so de-

composed, for many feet down, that they are cut as easily as earth. Good examples of this are seen in the excavations on the Pennsylvania Railroad about Philadelphia, and in those of the New Jersey Central Railroad from Clinton to Warren Junction. The limestones have been so much acted on by dissolving agents as to be thickly coated with earth, which is scarcely other than the impurities of the original stone.

And, generally, the conditions of the earthy and rock materials on the two sides of the line are such as would be expected if one had been left in quiet for untold ages, while the other had been subject to most powerful abrading and commingling agencies.

THE NEW WORKS AT CLAUSTHAL FOR DRESSING ORES.

BY JOHN C. F. RANDOLPH, E. M., NEW YORK CITY.

(Read at the Amenia Meeting, October, 1877.)

THIS establishment being now in full working order, it has seemed of considerable professional interest to collect together, in a concise form, the various points as to its plan, method of dressing, and equipment. The data contained in this paper have been largely drawn from the able paper of E. Kutscher, constructing engineer of the works, contained in the *Zeitschrift für Berg-Hütten-und Salinenwesen im Preussischen Staate*, 1873, supplemented by some personal memoranda made while the works were under construction and by memoranda on the works appearing in various German technical papers from their completion up to date. This is probably the largest dressing works in the world devoted to the beneficiation of argentiferous lead ores, and it is doubtful if any establishment for the concentration of mineral of any description can compare with it in size. As showing the final practice adopted in an old and very conservative mining region, in which the concentration of ores has been a matter of constant practice and experiment for a very long period, these works are of peculiar interest. The fact that the Clausthal ores strongly resemble a very large and abundant class of ores found in the United States has always attracted the attention of American mining engineers and mine owners to the methods employed in dressing and smelting them. The study of their methods of concentration of ores has, however, always been full of difficulty,

on account of there having been in the Clausthal Revier no single large works carrying out a complete dressing of the ores and thoroughly equipped for the purpose. Until the erection of the new works, dressing was carried on in a large series of very small works, very imperfectly equipped, in which the concentration losses were very large. As a general rule these small works had grown up very gradually, and were filled with old and imperfect machines, which had been added at different periods, and were retained long after more perfect machines had been invented, because of the impossibility of replacing them without remodelling the works entirely. As in most cases this was impossible without digging new foundations, and erecting entirely new works, many of these Clausthal works presented in their equipment and appliances a perfect epitome of the history of ore-dressing from the earliest times to the present day. As museums they were interesting, but as dressing-works they were ill adapted to their work. Since the treatment in most of them was only partial it was continually a question if it would not be more economical to throw aside middling products from various operations than to transfer them to other works for further treatment. All of these old works depended entirely on water as a motive power, and in many of them several water-wheels of small power and awkward construction were necessary to accomplish the work even imperfectly. It was no uncommon thing to find water-wheels of small power and large diameters and but small head of water laboriously driving a single machine and not being thoroughly successful. Where heavy work like that of driving stamps had to be done, several water-wheels were sometimes made to combine their efforts. All of these small works were liable to a stoppage in case of a drought. In the Pochthal and the Zellerfeldthal there were a large number of dressing-works of the character described. For a long time the desirability of continuous systematic dressing of the Clausthal ores was felt, and in 1862 it had become thoroughly evident that this would always be impossible with the existing works and that it would be equally impossible to remodel them so as to answer the increasing needs of the mines and furnaces. It was therefore decided to build one large works, compact and well equipped, in which the dressing should be both continuous and systematic, and to let this new establishment replace the old ones.

The site selected was the very advantageous slope of the Bremerhohe, facing the Pochthal, which was already occupied by the Clausthal Stamp Mills, numbers 1 to 10. The original plan con-

templated a total capacity of 50,000 tons a year, driving the stamps at night, and the rest of the apparatus by day, and using as far as possible the existing water-power, but not being entirely dependent on it. Before the completion of this plan, it was modified to admit of a yearly capacity of 75,000 tons a year or 250 tons a day on the same basis. The increased production of the Clausthal mines in 1866 made a further change of plan necessary, and their final form is for a capacity of 150,000 tons a year or 500 tons per day if all the machinery is driven both day and night. In erecting the works some of the old buildings have been utilized, but most of the buildings are new, and very large. Some portions of the old equipment, also, have been retained as serviceable. The new works were completed in 1872, and probably cost more than the original estimates on account of the several changes in plan during construction. A very important consideration connected with the erection of the new works was the opportunity offered by their construction on the site selected for carrying out a broad and novel plan of transportation for the ores from Clausthal mines, drained by the celebrated Ernst August tunnel, which supply the larger part of the ore treated in the works. The Ernst August tunnel is a navigable adit, and strikes immediately beneath the hill on which the works have been erected. The plan was to tap the adit by a shaft from the upper part of the slope, and thus render it possible to bring the ores by boat from the various mines through the adit and the shaft directly into the works. Other ores from the Silbersegen Mine to the south were to be brought through a level and a second shaft, and the small amounts of ore from the Altersegen Mine to the east were to be brought by tramway. The advantages and economy of such a system of transportation of ores to the works need hardly be dwelt on. In erecting the works advantage has been taken of the slope, in the usual way, so that the ore descends from treatment in one building to further handling in the next below—the floor of one building being level with the upper part of the next. The slope may therefore be regarded as a series of steps, on each of which are situated buildings for one or more stages of dressing. By referring to the plan of the works (Plate IX), which is a reproduction from the drawings of Mr. Kutscher, the peculiarly advantageous character of the topography of the hill, and the manner in which it is utilized will be readily seen. On the first or upper division of the slope is the mouth of the shaft, *d*, connecting with the Ernst August tunnel; the stone-breaker house, *h*, containing breakers and coarse sizing

drums, and the buildings, *a*, *b*, *c*, *d*, containing engines for hoisting and for power, and the hoisting reels. On the second step, somewhat lower, are two picking-houses, entered on the second story by a track led over a trestle from the breaker-house. The building *i* is for picking the mine smalls, and *K* for broken rock. From these picking-houses a track leads northward along the brow of the slope to the dumping-ground. On the third is the ore-ground, and the magazines. Ore from the picking-houses above is either lowered down the slope to it, or is dumped from the trestlework which goes over it. On the fourth step is the coarse separation-house (1), a third picking-house (3), and a small fine separation-house (2). The buildings (2) and (3) are on the sides of the coarse separation-house, and slightly lower. The ore enters the second story of (1) from the ore-ground by a track passing over one of the two sets of "spitzkasten," which are placed outside of the building. On the fifth division of the slope is one coarse crushing-house (6) with sizing drums, driven by water-power, and sufficiently large to admit of doubling its equipment. On the sixth step is the second coarse crushing-house (6), of double the capacity of the other and driven entirely by steam-power from the engine (14) on the same level. On the same level is also the coarse jigging-house (7). The middle and fine crushing-house (8), containing most of the fine sizing-drums, is on the seventh step, and on the eighth is the fine jigging-house (9). On the lowest step, which is the bottom of the slope, are the stamping-house (11), and slime pits, the auxiliary washing-house (10), the office (17), and a number of buildings, used formerly as small stamp mills.

The plan of the works is by no means a perfect one, and it does not seem as though the slope has been utilized to the very best advantage. The main point to be borne in mind in laying down the plan of works where there is a slope available for the purpose is, undoubtedly, that the products shall descend steadily downward, so as to reduce the cost of handling to a minimum. It is consequently a bad disposition to use the ore-ground on the third step for storing finished products, which have to be raised back from the lower steps. These should rather be stored on the very lowest level. The position of picking-house number 3 is extremely awkward, and a better arrangement might have been made, so that the ore from the coarse separation-house to be picked should have gone forward and downward instead of backward. The erection of two coarse crushing-houses was necessitated by the plan of driving one entirely by steam, as the

water power was not sufficient for both, but they should have been nearer together and on the same level. The institution of a separate fine separation-house by the side of a coarse crushing-house for the treatment of the fine stuff coming from the coarse drums is open to criticism, but is most probably a necessary arrangement, although considerable advantage might have resulted from having all the fine sizing apparatus under the same roof.

The water for the works is brought by a water-ditch, as indicated on the plan. It is not constant in amount during the different parts of the year, and the establishment is arranged so as to use it both for concentration purposes and for power. Being equipped with ample steam-power as well, the water-power can be at any time supplemented or replaced in seasons when all the water may be needed for dressing operations. The manner in which the water is used over and over again in passing through the works is of considerable interest, and quite according to the economic methods of the Hartz. After being used on each step it goes into a series of clearing-tanks under the floor or outside of the building, and, being thus partially cleared, descends to the next building, to be used again. In its downward course it goes through several series of revolving screens, spitzkasten, jigs of all classes, stamp batteries, labyrinths, buddles, and tables. It also drives four turbines, and one overshot wheel, and only finds rest when it reaches the large series of slime pits, in which it deposits its slimes before being allowed to leave the works. The details of its use in the works will be more fully treated in speaking of the details of the different buildings.

The power for the works is, as has been noted, partially steam-power and partially water-power, arranged to supplement one another when necessary. By reference to the plan the points where the power is applied will be readily seen. At the top of the slope, *b*, is a small Corliss engine for hoisting from the shaft, *d*, and for giving power to the rock-breakers and sorting-drums in the building, *k*. In the building (1) is a turbine with 18 feet head, for giving power to the coarse drums in (1) and the fine drums in (2). In the coarse crushing-house (6) are two turbines of 18 feet head, which may, at will, supplement the power of the turbine in (1). In the middle and fine crushing-house (8) is a turbine of 78 feet head, which gives power to the buildings (7), (8), and (9), and can supplement the power in (6). The Corliss engine (14) of 100 horse-power gives power to the second coarse crushing-house (6), and supplements the power in (7), (8), and (9), and in case of lack of water can be relied on entirely for power

in the whole flight of buildings (1), (2), (6), (7), (8), and (9). The 150 horse-power Corliss engine in the stamping-house (11) drives the stamps, jigs, buddles, and tables in that house, and also two pumps. The two Corliss engines (14) and (11) get their steam from the boiler-house (12), to which coal is elevated by the steam slope (13). Up the same slope are brought the material for dumping, arising from the buildings (7), (8), and (9). Finally, the jigs, buddles, and tables in the auxiliary washing-house (10) are driven by an overshot water-wheel, 13½ feet in diameter, placed at one end of the building.

THE METHOD OF DRESSING.

The works have been equipped for handling the ordinary Clausthal ores. These consist of low grade argentiferous galena somewhat finely disseminated in a gangue of calc spar and baryta, and more or less intimately associated with chalcopyrite, pyrite, marcasite, and zinc blende. The equipment is calculated for the reception of about one-half of the ore as mine smalls of the size of 64^{mm} and under, and the remaining ore of larger size. This is about the usual proportion. The only preparation the ore receives in the mines is its separation by ragging hammers from absolutely barren gangue, wall rock, etc. It was formerly separated below ground into rough classes, which were kept distinct, but this is no longer found necessary. For the sake of greater clearness, the course of the dressing, which is somewhat complicated, will be given unmixed with details of apparatus or results. In connection with this description, the skeleton on Plate IX, has been carefully prepared and is believed to be correct.

On its arrival from the shafts, or by tramway, the ore enters the second story of the rock-breaker house, and is dumped from the cars on a bar grate, the bars of which are 64^{mm} apart. By this grate the ore is divided into two first classes or sizes—above and below 64^{mm}. All under 64^{m} in size passes through the grate into a revolving screen below, and is screened wet. The ore remaining on the grate, or above 64^{mm}, is pushed down a slight incline to the jaws of a Blake crusher, by which it is broken to 64^{mm} and under, and falls into a revolving screen similar to that in which the smalls from the grate are screened, but the screening is done dry. By the screens the grate smalls and the breaker smalls are divided into similar sizes—all below 32^{mm}, which passes through the mesh, and all above 32^{mm} or between 64^{mm} or 32^{mm}, which passes out at the end of the drum. The ore above 32^{mm} from the grate screen and the breaker screen is kept distinct, and each class is picked in a special picking-house provided

for it. In this hand-picking no pure galena is obtained. The following are the products of the picking:

1. Stamp ore, in which the galena is finely disseminated.
2. Crushing ore, which contains the galena in coarse particles.
3. Copper pyrites.
4. Iron pyrites.
5. Marcasite.
6. Zinc blende.
7. Poor rock and gangue.

Of these classes, Nos. 1 and 2 are the objects of dressing together with the smaller size under 32^{mm} previously obtained. The copper pyrites are sold to the copper works at Altenau. The iron pyrites and marcasite are sold to the sulphuric acid works in the same place, and the zinc blende is sold in open market. The ore from the sorting-drums below 32^{mm} in size descends to the coarse sizing-drums in the coarse separation-house on the 4th step of the works. In this building it is sized wet into eight divisions. Of these, the largest size is between 32^{mm} and 17.78^{mm}, or in other words above 17.78^{mm}, and goes to a third picking on the same level, from which the same products are obtained as in the other two picking-houses. The other sizes from the coarse drums are—

$$17.78^{mm} — 13.34^{mm} — 10^{mm}$$
$$7.5^{mm} — 5.62^{mm} — 4.22^{mm}$$

These six sizes, together with the same sizes from the coarse crushing-house in which the crushing ore from the picking-houses is crushed and sized, are the material for coarse jigging. In addition to these sizes, the sizing-drums in both the coarse separation and coarse crushing-houses furnish an eighth size. All the ore below 4.22^{mm} or between 4.22^{mm} and 1^{mm} goes through the last screen of each set and is caught in a zinc funnel, the turbid water containing ore below 1^{mm} in size, flowing off to the spitzkasten, as will be noted. This deposit in the zinc funnels between 4.22^{mm} and 1^{mm} is drawn off to fine sizing-drums of which there is a small auxiliary set especially for the handling of the small amount coming from the coarse separation-drums. From the fine sizing-drums the following classes are obtained:

$$4.22^{mm} — 3.16^{mm} — 2.37^{mm} — 1.78^{mm} — 1.33^{mm} — 1^{mm}$$

and in material below 1^{mm} which is caught in a funnel below the last screen. The same fine sizes, 4.22^{mm}—1^{mm}, come also from another source—the middle and fine crushing-house, where the middle products from the coarse jigging are crushed and sized. All these sizes from 4.22^{mm}—1^{mm} are the material for the fine jigging. The sands below 1^{m} settling in the spitzkasten after coarse separation are drawn off to

the auxiliary washing-house. The sands below 1^{mm} settling in the funnels below the fine sizing-drums are first jigged and then drawn off to the auxiliary washing-house. Fine jigging furnishes middle products, which, although containingmineral, need further reduction before it can be obtained. These middle products from fine jigging, and the most finely picked or stamp ore from all three picking-houses, are handled in the stamp-house. From the screens of the stamp batteries the thin pulp is first led through a classification apparatus of a number of boxes of increasing size, in which the sands deposit, and are drawn off at the bottom. The water flowing from the top of the last classfication box is led through a set of Rittinger spitzkasten for the deposition of the slimes. The sands from the classification apparatus are jigged on neighboring sand jigs, and the jigged product is either rejigged or sent to the buddles below. The turbid water from each set of jigs belonging to one classification apparatus goes into an adjoining labyrinth of 25^{m} — 30^{m} circulation in which slimes are deposited, and then to the clearing tanks outside. The slimes from the Rittinger spitzkasten are discharged through a rising pipe upon the upper one of two overlapping buddles on which a pure schlich is obtained, and an enriched band, which is retreated on the lower buddle. Finally the middle product from the sand jigs is treated on non-continuous tables, and the slimes from the labyrinth and slime-pits are from time to time removed and treated either on the buddles or the tables. The auxiliary washing-house alone remains to be spoken of. To this building come the slimes from the spitzkasten attached to the coarse separation and coarse crushing-house, and also the jigged slime from the fine sizing-drums in the fine separation, and middle and fine crushing-houses. These are dressed in the auxiliary washing-house by the same combination of apparatus and operations as we have detailed as being used for the pulp coming from the stamp batteries. The buddles alone are different in this building, as instead of consisting of a pair of convex buddles on different shafts and overlapping, they consist of a concave and convex buddle one above the other on the first shaft, and a lower convex buddle on a second shaft overlapped as before.

The salient points of this method of dressing may be noted as follows: No mineral is obtained from hand-picking; sizing and jigging are carried out to the extreme limit; all the mineral obtained comes from the jigs, buddles, and tables. The extent to which sand jigs are used is almost unprecedented, and they handle finer material than has hitherto been handled on them in the Hartz. The whole

of the method for coarse material is admirable, but it is perhaps a question if a more extensive use of tables might not be of advantage in handling the sands and slimes instead of the sand jigs and buddles. It seems probable that the method of handling the pulps from the stamps is not a final one. As regards the coarsest products from the coarse screens, viz., over 17.78^{mm}, two courses are open for its treatment—(1) either to submit it to hand-picking, or (2) to send it at once to the coarse rolls. The first plan seems the best, and they have adopted it. An economy of labor might have been attained by letting it fall directly from the drum on continuous belt picking-tables, as the amount is comparatively small.

THE DRESSING MACHINERY.

The apparatus with which the establishment is equipped now demands our attention. This may for convenience be classified under three heads: I. *Machinery for reducing the size of the ore.* II. *Apparatus for sizing and classifying the ore so reduced.* III. *The jigs; and* IV. *Other concentrating apparatus.*

1. *Machinery for reducing the size of the ore.*—This consists of three classes of machinery—rock-breakers, rolls and stamps.

The *rock-breakers* are the Hanover variation of Blake's machine so much favored in Germany. They are six in number, with a capacity 5–7½ tons per hour each when crushing the large ore to 64^{mm}. Their breaking capacity therefore exceeds that demanded by the amount of ore coming to them.

The Crushing Rolls.—These are all of similar construction, and consist of a cast-iron shaft with a conical seat, on which the crushing-face, which has been trued both inside and outside, is secured by a screw at the ends. On account of the large consumption of crushing surfaces in the works, careful comparative experiments have been made with faces of cast iron, chilled iron, Bessemer steel, crucible steel, and hammered cast steel. The results of these experiments seem to warrant their present preference for crucible steel as best meeting the two requirements of durability and medium cost. The pillow-blocks in which one of the rolls moves are movable, with india-rubber buffers pressing against them. On the prolongation of the axes of the rolls are toothed wheels, working in one another. The power is laid on by a pulley driving intermediate gearing. The construction of these rolls is in no way peculiar. There are three sets of coarse rolls in the works, with room for a fourth set if it is at any time needed. These coarse rolls are 760^{mm} in diameter,

with a face 300^{mm} long. The rolls are set 18 ^{mm} apart, and make 24 revolutions a minute, with a capacity for each pair of 5½–7½ tons per hour. The middle and fine rolls, of which there are six sets of each, are of similar construction, but of a diameter of only 380^{mm}, and the same length of face. Of these the middle rolls are set to crush to 6^{mm}, and the fine rolls to 2^{mm}, and both classes of rolls are given a velocity of 60 revolutions a minute, with a product of from 2½–3 tons an hour. The following table gives these details in tabular form:

	Number of sets.	Diameter.	Face.	Revolutions per minute.	Crushing to.	Capacity per hour.
Coarse Rolls	3	760^{mm}	300^{mm}	24	18^{mm}	5—7½ t.
Middle Rolls	6	380^{mm}	300^{mm}	60	6^{mm}	2½—3 t.
Fine Rolls	6	380^{mm}	300^{mm}	60	2^{mm}	

The Stamps.—There are in all 176 stamps in 8 batteries of 22 head each. The original plant of 120 stamps was found in 1875 to be insufficient for handling all the material coming to them for fine reduction. For three years, therefore, a portion of the middle products from fine jigging had to be thrown away. This has now been obviated by increasing the number of stamps. They have heads and dies of soft iron, with wrought-iron stems and cast-iron mortars. The total weight of each stamp, including stem, head, and tappet, is from 200 to 215 kilograms. They are driven by cam shafts (which are separate from the frame, after the usual German method), to which power is transferred by belting and a large band-wheel. The cams are double. No data is at hand of the present practice, as to the number of drops a minute or the height of stroke. The number of drops per minute is probably lower than the best American practice, if it follows the usual practice in the Hartz. Each battery is supplied with Rittinger's "stausatz" above the screens, for drawing off chips, shavings, straws, and other woody matter, from which it is almost impossible to keep ore free, and which are such a continual annoyance by clogging the screens, etc., when working without this simple arrangement. This "stausatz" is so well known as to need no description here. The water for stamping is introduced on the front above the "stausatz" and screens. The ore is fed from the floor above at the back of the stamps into a series of large stationary hoppers, the sides of which toward the stamps are vertical, and the other side oblique. These hoppers have a feeding-slit at the bottom of the vertical side, which is alternately opened and closed

by a sliding-plate moving horizontally back and forth by means of a simple connection with a line of shafting. The velocity of this sliding-plate is 43^{mm} per minute. The ore thus escaping from the hopper slides down a short inclined trough into the mortar. The same feeding arrangement is used for the coarse rolls, as it permits a large amount of ore to be stored in the hopper, which is of importance when the intervals of charging the hopper are long, as in that case, on account of the distance the ore has to be brought.

II. *The Sizing and Classifying Apparatus.*—With the exception of some bar grates used for coarsely dividing the crude ore coming to the breaker-house, and the material coming from the middle rolls, all the sizing apparatus consists of revolving drums or screens. The grates need no description. In the breaker-house they consist of bars set 64^{mm} apart, and are six in number. In the middle and fine crushing-house the grates are beneath the middle rolls, with openings 4^{mm} apart, and have the object of separating the material falling from the rolls, which is already fine enough for fine jigging, from the coarser particles, which are pushed off the grate down a trough into the fine rolls for further reduction. The *sizing-drums* are of two classes: (1), conical, with horizontal axes; (2), cylindrical, with inclined axes, of which the larger portion belong to the first class. They are all of the usual construction, having an internal axis, with rings at intervals, on which sockets are cast, in which radiating iron arms fit. These arms are connected at the outer ends by circular and straight wrought-iron bands, and are covered by a perforated metal screen of appropriate material. All the perforated screens are of sheet iron, except those with holes of 1^{mm}, which are sheet copper. These screens are single and in sets of three or five each, according to the purpose for which they are used. In the breaker-house there are 12 single conical screens, with horizontal axes, and sides inclining 1 : 24. Of these, six are beneath the grates for washing and rough sizing the grate smalls, and six are on the opposite side of the building for dry sizing of the smalls from the breakers above. Those for wet sizing are 2.75^{m} in length, and those for dry sizing 1.83^{m}, and all have the same diameters of .83^{m} and 1.07^{m} for the ends. They are all covered with perforated sheet iron with holes of 32^{mm}, and make 12 revolutions per minute, with a capacity of 2½–3½ tons per hour for each.

In the coarse separation-house (marked 1 on the plan of the works), and the two coarse crushing-houses (marked 6), are found the *coarse sizing-drums* in sets of three each. Four of these sets are in the

coarse separation, and in the two coarse crushing-houses four and two respectively, or ten sets of coarse sizing-drums in all. These coarse drums are all cylindrical, with axes inclined 1 : 24, and each set is arranged in a descending series, one below the other, on a line of about 45°. The upper drum is larger than the others, being 2.75^{m} long and .9^{m} in diameter. The two lower ones of the set are 1.83^{m} long and .6^{m} in diameter. The upper one is divided in three equal parts, each of which is covered with a perforated sheet-iron screen, the holes of which are respectively 32^{mm}, 17.78^{mm} and 13.34^{mm}. In like manner the second and third drums have each two screens with holes, 10^{mm} and 7.5^{mm} in the second drum, and 5.62^{mm} and 4.22^{mm} in the third. The second and third drums are geared together by toothed wheels at one end, and are driven by a separate belt moving in different directions, but the upper drum is driven by a separate belt of its own, going in the same direction as the lower one of the set. They are all driven at twelve revolutions per minute, and each set sizes from 3½–5½ tons per hour.

In the small separation-house and the middle and fine crushing-house are found the *fine sizing-drums* in sets of five drums each. There are two of these sets in the former, and six in the latter building. All the fine drums are conical, with horizontal axes, and sides inclining 1 : 24. The five drums constituting a set are arranged in pyramidal form, one drum forming the apex, and twodrums below on both sides. On the end of each is a gear wheel, by which motion is transferred from one to another—the direction of the motion being of course reversed at each transfer. The power is applied to the lower one of each set by a belt and band wheel. All the drums of a set have the same dimensions, being 1.83^{m} long, and .6^{m} and .7^{m} in diameter for the two ends. Four drums of each set are covered with perforated sheet iron, but the fifth (1^{mm}) is covered with perforated sheet copper. The sizes of the holes of the various drums are 3.16^{mm}—2.37^{mm}—1.78^{mm}—1.33^{mm}—1^{mm}, and the drums are arranged so that the middle one, with 1.78^{mm} holes, forms the apex, and receives the ore to be sized. The material passing this screen goes to the finer drums on one side, and what the screen refuses, goes to the coarser drums on the other side. This is quite a usual arrangement for a large set of drums. The following will show sufficiently plainly the arrangement of the drums according to the sizes:

1.78^{mm}

3.16^{mm} 1.33^{mm}

2.37^{mm} 1^{mm}

All above 1.78^{mm} goes to the 3.16^{mm} drum, which refuses all above

3.16^{mm}, which goes to its bin, while the portion below 3.16^{mm} falls into the 2.37^{mm} drum, by which all between 2.37^{mm} and 1.33^{mm} is passed, and all between 2.37^{mm} and 3.16^{mm} is refused.

The sizes furnished are therefore

I. All between 4.22^{mm} and 3.16^{mm}
II. " " 3.16 " 2.37
III. " " 2.37 " 1.33
IV. " " 1.33 " 1
V. 1^{mm} and under

The following table shows these details of the sizing-drums, arranged for reference and comparison:

SIZING-DRUMS.

Use.	Number.	Shape.	Axis.	Length.	Diameters.	Revolutions per minute.	Holes.	Capacity per hour.
				m.	m.		mm.	
Washing and sorting grate smalls	6	Conical	Horizontal.	2.75	.83—1.07	12	32	2½—3½ t.
Sorting breaker smalls	6	Conical	Horizontal.	1.83	.83—1.07	12	32	2½—3½ t.
Coarse sizing in sets of 3	40	Cylind.	Inclined	2.75 1.83 1.83	.9 .6 .6	12	32–17.78–13.34 10—7.5 5.62—4.22	3½—5½ t.
Fine sizing in sets of 5	40	Conical	Horizontal.	1.83	.6—.7	12	3.16 2.37 1.78 1.33 1	?

The *apparatus for classifying* material, too fine for sizing by screens, viz., sands and slimes, consists of zinc funnels beneath some of the drums, various series of spitzkasten, and the classification sets in the stamp-house and the auxiliary washing-house.

The action of all this apparatus is a classification by deposition according to gravity, by which the heavier coarse sands settle first, the lighter coarse ones afterward, the heavy fine particles next, and the light fine ones last of all. To a limited extent, the action is also one of sizing. Of these appliances the *zinc funnels*, or *spitztrichter*, are more collectors than classifiers. They are placed beneath the last drum of each set of coarse and fine sizing-drums for catching, in the first instance, all material below 4.22^{mm}, and in the second case all material below 1^{mm}. There are consequently ten of them connected with the coarse drums, and eight with the fine drums. They are

made of sheet zinc to better avoid corrosion, and are approximately .6^{m}×.6^{m} square at the top by .4^{m} deep. The material accumulating in them is drawn off periodically. That from the coarse drums is considerable, and goes off by launders to the fine drums, while that from the fine drums is small in amount and goes to sand jigs. The water flowing over the edge of the funnels is led in the first case by launders to series of spitzkasten, but in the second case it goes into clearing tanks under the floor.

Of ordinary spitzkasten, for settling the slime in the turbid water from the zinc funnels, there are two sets outside the coarse separating-house of six each, and two sets of two each in the middle and fine crushing-house, or in all, 26 spitzkasten. In size, those belonging to coarse separation are approximately 2.7^{m}×2.7^{m} on top by 2.8^{m} deep each, and the others 2.8^{m}×1.8^{m} on top, by 2.2^{m} deep. None seem to have been placed in the coarse crushing-houses, where they are equally applicable.

Of *classifiers*, there are in the stamping-house four sets of six-pointed boxes each, and in the auxiliary washing-house three sets of seven each, arranged in an increasing series. The first is the smallest, the next below is double in size, then come a pair which together are double the preceding in width, and finally a similar pair. In the washing-house, three single ones come first, and then two pairs. The arrangement in the two cases may be represented as follows:

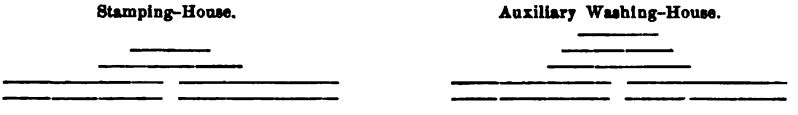

Each line represents a classifying box—in form an inverted pyramid. The data, as to their dimensions, can be drawn from the plates which appear in connection with this paper. As only rough approximations can be obtained in this way, they are consequently not introduced here. These classifiers have not been satisfactory, and are liable to be supplanted at any time. This is the apparatus that was invented by Meineke.

The last apparatus of this character to be noted are the *Rittinger spitzkasten*, whose introduction in the Hartz is a new feature. One set, of six each, takes the turbid overflow from each set of classifiers. There are, consequently, 4 sets of them in the stamp-house, and 3 sets in the auxiliary washing-house. Their dimensions are 2^{m}×2^{m} on top and 1.8^{m} deep, and their purpose is to settle and classify the slimes for the buddles.

III. *The jigs, buddles and tables, and apparatus belonging to them.*—*The jigs* in these works form a very important and extensive portion of the concentrating apparatus. They are all of the type known as Hartz jigs, and with but few changes in construction and methods of use represent the best practice in this region for the last 10 years. (See Plate X.) There are in the original equipment some 71 jigs of the same type, varying principally in the number of sieves and pistons, the number and length of strokes per minute, the method of jigging, the size of mesh and the method of discharge. We will first, for convenience, notice the points they all have in common, and then the points in which they differ.

They are all stationary sieve, side-piston jigs, with the piston in the back compartment, and the sieve on which is the material to be jigged in the front one. These compartments are separated only at the top and connect below. They are all provided with one piston for each sieve, and each sieve receives its jigging action by the upward impulse given by the water to the ore on it, by means of the piston belonging to it. They are all continuous-working jigs, both feed and discharge being continuous. In jigging they all work with the down stroke of the piston slightly faster than the up stroke. In all of the jigs the water is introduced either directly into the piston compartment above the piston or into the same compartment from an overflow-box supplied by a pipe with a faucet to regulate the flow.

They are dissimilar in the following general points:

(1.) The method of imparting motion of the proper character to the piston is attained in two ways. The first method is common to all the coarse and fine jigs, and is shown in side elevation in Figs. 31, 34, and 41, Plate X. On the end of the driving shaft belonging to the jig is a disc on which a connecting rod is geared eccentric. This connecting rod engages a short horizontal lever, which fulcrums on a secondary shafting, allowing its end to move up and down as the connecting rod rises and falls. To this lever, between the fulcrum and the power, is suspended the piston-rod to which the piston is hinged. The length of the stroke depends on the distance the connecting rod is placed off the centre, and also on the distance from the fulcrum at which the piston-rod is attached. The other method is shown in Figs. 25 and 26, and is used with many of the sand jigs. It consists in connecting the piston-rod directly with the power shaft of the jig by an eccentric at the top. The figures explain themselves. The

first is indirect and adapted for longer and slower strokes than the second. By both methods the up and down stroke are equal in rapidity, and this disposition is fairly open to criticism, as the best results have always been attained theoretically and practically by a quick down stroke and a slow up stroke. (2.) The methods of continuous discharge are of three different types. The first is represented in side elevation in Fig. 23, and consists of the well-known discharge under and over a cap and sill. The cap is lowered by thumb-screws, so that only the concentrated lowest layer on the sieve can pass into the inclined launder below it, built into the body of the jig. In order to discharge under the cap, it is forced to rise over the sill beneath it, thus preventing portions of the upper layer being drawn out with it. Both cap and sill are adjustable. The upper layer discharges at the same time over the cap to a second sieve, on which the same thing is repeated, or in case of a one-sieved jig it discharges at once into its appropriate box. The second method is shown in side elevation on the first sieve of Fig. 32, marked *d*. It is Wimmer's once favorite invention of central discharge, of which now very few instances remain in Clausthal. It consists of a discharge pipe projecting slightly above the centre of the sieve, and surrounded by an adjustable sleeve or cylinder of sheet iron. The lower layer on the sieve discharges continuously under the sieve and over the edge of the pipe, by which it is carried to its bin outside of the jig. Its action is similar to the preceding, which indeed takes its rise from it. The third method of discharge is common to all the sand jigs, and is shown equally well by Figs. 26, 35 or 42. In these jigs the discharge is through the sieve, which consists of a mesh covered by a bed of somewhat coarser pure mineral. The heavier particles of the sands jig through the interstices of the ore layer, and through the mesh, and arrive in the hutch from which they are drawn at intervals as indicated. The upper layers go over a simple sill to a second bedded sieve, as in Figs. 35 and 41, on which the same action is repeated, or at once discharged, as in Fig. 25, over a sill. (3.) What has already been said will indicate the fourth general difference in the jigs to be a difference in methods of jigging. The first method is jigging on the sieve for coarse and fine jigging, and the second method is jigging *through* the sieve for sand jigging. These two methods necessitate the different methods of discharge, which have been shown. (4.) The manner of feeding the coarse and fine jigs is by a hopper, as shown in Figs. 23, 32, 35, and 42, but the sand jigs are fed through a launder as shown in *a*, Fig. 25, through

which the sands are drawn, mixed with water, from the zinc funnels or classifying boxes directly on to the sieve.

The general arrangement of the coarse jigs is shown in Figs. 22, 23, 24, which illustrate the construction of a two-sieved coarse jig. Each compartment of the jig is divided at the top into two parts by a partition not extending to the bottom. In the front division is the stationary sieve, and in the rear one the piston.

To change the direction of the current given to the water by the down stroke of the piston with least loss of effect, the bottom of each jigging compartment or the hutch is made V-shaped by boards inserted at the proper angle. This serves also to collect the fine particles which are produced by attrition and fall through the sieve during the jigging. This fine stuff, commonly called the hutchwork, is always produced, and is discharged periodically through a hole in the bottom of the hutch by raising an iron rod which has a conical plug fitting the discharge opening. The rod goes through the short division wall between the piston and the sieve in the upper part of the jig-box and is provided with a handle. The different jigging compartments in the same machine communicate only at the top above the sieves. The sized ore arriving on the sieve through the slit, *a*, of the hopper is jigged; the concentrated lower layer goes off under the cap, *b*, into the small launder, *c*, which discharges it at *d*, into the collecting-box, *m*, at the side. The upper layers passing over the cap arrive at the second sieve, which is slightly lower than the first. They are jigged on this sieve, and the heavier portion, settling in a lower layer, discharges continuously under the cap, *e*, into the small launder, *f*, which conducts it into the receptacle, *n*, at *g*. The upper layers on the second sieve go off over the cap, *e*, and fall through *h*, into the launder, *i*, which conducts them to the collecting-box, *o*. In the hutches of the two jigging compartments falls continually fine stuff, which is produced by attrition and is discharged periodically. That from the first hutch is discharged into the small launder, *e*, below it, shown in Figs. 22, 23, and 24, and by it is carried to the collecting-box, *r*, and in the same way that from the second hutch is carried by the launder, *e'*, into the collecting-box, *r'*. All three of the receptacles *m*, *n*, and *o*, for the reception of material from above the sieve, are provided with sloping bottoms, and have on the front side discharging slides. The lower half of the sloping bottom of these receptacles is water-tight, but the upper part is composed of a finer mesh than that of the jigged material, through which the water is continuously drained, flowing off down an inclined partition to a

launder, q, beneath the jig, which delivers into a launder, t, from which it is discharged into the clearing tank, u, beneath the floor. In the same way the overflow of the box, r', passes by a cut in the top of the partition into the box, r, from which it flows off through the launder, t, into the clearing tank, u. The receptacles, m, n, o, r, r', are sufficiently high to allow of discharge into cars. In the works there are 9 of these two-sieved jigs, and 4 one-sieved jigs, which are used for rejigging middle products. All of them are provided with large hoppers into which the sized ore is dumped from the upper floor.

The fine jigs are of three classes, viz., two-sieved jigs with partial central discharge, 12 in number, for stuff between 4.22^{mm} and 2.37^{mm}, which are shown in Figs. 31, 32, 33; two-sieved jigs, jigging stuff between 2.37^{mm} and 1^{mm}, 7 in number, jigging through the sieve, which are not illustrated; and four-sieved blende jigs, Figs. 41, 42, 43, which jig blendy stuff of 2.37^{mm} to 1^{mm}, through the sieve into the hutch. In the two-sieved jigs with partial central discharge, Figs. 31, 32, 33, the concentration on the first sieve discharges under a sleeve in the centre into a pipe which carries it into the receptacle c. The upper layers pass over a sill to the second sieve, from which the concentration is discharged under the cap, f, into the receptacle, m, and the remainder passes over the cap into the receptacle, l. The hutchwork goes by launders below into the box, n. In this case the water drains from c and m, as before, by means of screens and launders into the clearing tank, but the overflow from l, passes by a screen into n', from which the overflow discharges by two launders into the clearing tank. These jigs are evidently old dispositions, and not nearly as well arranged as the more recent ones, of which Figs. 22, 23, 24 are a type.

The four-sieved blende jigs were put in as an experiment, and they are certainly a departure from the usual Hartz practice. There is no reason, however, why they should not do well, for although a four-sieved jig is a novelty in the Hartz, four-sieved jigs have long been used successfully at Silberau, near Ems, and at Breinigerberg, near Stollberg. At Dieppenlinchen, near Stollberg, five-sieved jigs even have given satisfaction for sands, and the blende stuff jigged on the four-sieved jigs at Clausthal would fairly fall under the head of sands according to the old classification. These four-sieved blende jigs are represented by Figs. 41, 42, 43, and treat blendy stuff between 2.37^{mm} and 1^{mm}, jigging through a sieve bed. The pure schlich from the first hutch goes by a launder into the box b; the middling from the second hutch goes to the box c; the pure blende from the third

hutch discharges into *d*; the middling from the fourth hutch discharges into *e*, and the clear rock from above the four-inch sieve discharges into the box *f*. The overflow from *b*, *c*, *d* passes into *g*, from which it is led by two launders to the clearing tank, while that from *e* and *f* is drained off by screens, and goes by two launders to the same place.

The last class of jigs are the *sand jigs* proper for stuff under 1^{mm}, all of which jig through a sieve bed. They are of one, two, and three sieves, respectively, of which only the one-sieved machine is illustrated in Figs. 25, 26, 27, which needs but little explanation. The hutchwork goes off into *c*, from which the overflow goes into the second box, *c*, and then into settling boxes *d d* and *c*. The water and lighter stuff goes off over *e* into the pipe *f*. The various data concerning these jigs have been collected by me into the accompanying table for purposes of reference.

It will be noticed that in jigging none of the jigs are given more than 130 strokes a minute. In Siegen and other localities as many as 300 strokes per minute have been used in sand jigging with reported good results. It is proposed to double the number of sand jigs in the stamping-house and auxiliary washing-house. As has been remarked the whole system might be changed in these two houses with good results.

IV. It now remains only to speak of the buddles and tables. All the buddles in the stamp-house are convex buddles arranged in pairs, an upper and a lower one overlapping, and on separate shafts. The upper one is 3^{m} in diameter, and the lower one $4\frac{1}{2}^{m}$ in diameter. The middling from No. 1 or the upper one is retreated on No. 2, the lower one. In the auxiliary washing-house the buddles are arranged in triplets by placing a concave buddle above the upper convex one on the same axis. The lower one is convex as in the stamp-house. The dimensions are the same. This arrangement gives great satisfaction on account of its finer work, and it is probable the buddles in the stamp-house will be altered in the same way. There are four sets of double buddles in the stamp-house, and three sets of triple ones in the auxiliary washing-house. The tables are of the non-continuous Planherd pattern, of which no details are at hand. Experiments have recently been made with Rittinger's shaking-tables, but no result has been reported. The introduction of a large number of Rittinger tables, with glass beds, would seem very desirable. By their use such extensive sand jigging would no longer be necessary.

TABLE OF JIGS AT CLAUSTHAL.

	Coarse Jigs.		Fine Jigs.			Sand Jigs.					
						Fine Separation-House.	Middle and fine Crushing-House.	Stamp-House.		Aux. Washing-House.	
Number	9	4	12	7	5	2	6	8	8	6	6
Number of sieves	2	1	2	2	4	1	1	3	2	3	2
Number of pistons	2	1	2	2	4	1	1	3	2	3	2
Length of stroke	38 mm	25 mm	18 mm	12 mm	16 mm	12 mm	12 mm	12 mm	12 mm	12 mm	12 mm
No. of strokes per min.	100–120	100–120	120	125	125	120–130	120–130	120–130	120–130	120–130	120–130
Method of jigging	Continuous on sieve.	Continuous on sieve.	Continuous on sieve.	Continuous through sieve	Continuous through sieve	Continuous through sieve	Continuous through sieve	Continuous through sieve	Continuous through sieve	Continuous through sieve	Continuous through sieve
Method of discharge from 1st sieve	Under and over cap.	Under and over cap.	Centre and over sill.	Through sieve and over sill.	Through sieve and over sill.	Through sieve and over sill.	Through sieve and over sill.	Through sieve and over sill.	Through sieve and over sill.	Through sieve and over sill.	Through sieve and over sill.
Discharge from 2d sieve	Under and over cap.	.....	Under and over cap.	Through sieve and over sill.	Through sieve and over sill.	.....	.....	Through sieve and over sill.	Through sieve and over sill.	Through sieve and over sill.	Through sieve and over sill
Discharge from 3d sieve	.....	.....	.....	.....	Through sieve and over sill.	.....	.....	Through sieve and over sill.	.....	Through sieve and over sill.	.....
Discharge from 4th sieve	.....	.....	.....	.....	Through sieve and over sill.	.....	.....	.....	.....	.....	.....
Product of 1st sieve	Galena and Hutchw'k.	Galena, Hutchw'k and Rock.	Galena and Hutchw'k.	Rich Hutchw'k Galena.	Rich Hutchw'k Galena.	Galena and Rock.	Galena and Rock.	Galena.	Galena.	Galena.	Galena.
Product of 2d sieve	Enriched stuff, Hutchw'k and Rock.	.....	Galena and Blende, Rock.	Galena and Blende, Rock.	Galena and Blende.	.....	.....	Enriched sands.	Enriched sands.	Enriched sands.	Enriched sands.
Product of 3d sieve	.....	.....	.....	.....	Blende.	.....	.....	Poor sands.	.....	Poor sands.	.....
Product of 4th sieve	.....	.....	.....	.....	Blendy Rock.	.....	.....	.....	.....	.....	.....
Size of sieves	.7 × .5m	.7 × .5m	.4 × .9 m	.4 × .9 m	.4 × .6 m	.7 × .5 m	.7 × .5 m	.7 × .5 m	.7 × .5 m	.7 × .5 m	.7 × .5 m
Size of jig	1.7 × 1.2 × 1.2 m high.	1 × 1.2 × 1.2 m high.	1 × 2 × 1 m high.	1 × 2 × .8 m high.	3 × 1 × 1 m high.	1 × 1 × 1 m	1 × 1 × 1	2.5 × 1 × 1 m high.	1.7 × 1 × 1	2.5 × 1 × 1 m	1.7 × 1 × 1
Size of stuff worked	17.88 to 4.22 mm	Middle product from coarse jig.	4.22 to 2.37 mm	2.37 to 1 mm	Blende 2.37 to 1 mm	Under 1 mm	Under 1 mm	Classified stuff under 1 mm	Rejigging under 1 mm	Classified stuff under 1 mm	Rejigging under 1 mm
Size of sieve holes	2 mm	2 mm	1.5 mm	1 mm	1 mm	.75–1 mm	.75–1 mm	.75–1 mm	.75–1 mm	.75–1 mm	.75–1 mm

In the stamp-house and auxiliary washing-house the labyrinths are used for settling the slimes from the turbid water of the sand jigs. They are of the usual Hartz type, and consist of series of long deep boxes built side by side, and communicating at each end by cuts in the side wall. There are eight of them in the stamp-house of eleven boxes each, and six of them in the auxiliary washing-house of twelve boxes each. The circulation in each set is 25^m—30^m in length.

ECONOMICAL RESULTS OF THE DRESSING.

In conclusion, we will consider the practical results that have been attained from the dressing of ores in these works. Since they were started careful detailed accounts are said to have been kept of the various dressing operations, and of the working of the various machines. These accounts show the amounts fed to, and discharged from each operation, with careful analyses of the products. Figures from these accounts will probably find publication from time to time in the pages of the *Zeitschrift für Berg-Hütten-und Salinen Wesen*, which is the government organ, and in which, in addition to the careful paper of Mr. Kutscher, the engineer of the works, various data as to experiments and changes in the works have already appeared. As continuous, systematic, careful accounts have never been kept of the operations of ore-dressing on so large a scale, if at all, except for experiments, the most valuable results may be expected from them. One very practical result will be the basis they will afford for careful and frequent comparative experiments, and the great addition they will make to the accurate figures concerning ore-dressing. It does not seem a very wild prediction to anticipate as a not distant result of the accumulation of such figures the radical alteration of the whole method of treating sands and slimes in this establishment.

The only exact figures thus far published for these works are for five months in the year 1875. During that period 18,300 cubic meters of ore were treated, which were accounted for by the following products:

	Cubic meters.		Cubic meters.
Ore containing 71 per cent., .	13,000	Ore containing 1.8 per cent., .	330
" " 15 " .	2,740	" " .11 " .	21
" " 8 " .	1,450		
Total, ...	17,541		

This showed, therefore, for five months, a total dressing loss of

759 cubic meters, or 4.14 per cent. of ore which passed off unaccounted for. It was probably lost in two ways: (1) some of it went off still suspended in the water leaving the works. If we suppose 15 cubic meters of water leaving the works per minute, this would give about $\frac{8}{10}$ of a pound of material suspended in every cubic meter of water leaving the works for five months. Part of it, however, was (2) in the ore thrown away in hand-picking, and contained in the tailings from the jigging houses. The average of many analyses made show the following percentage of galena to be contained in the barren material sent to the dumping-ground, and in the slimes going off suspended in the waste water or thrown away:

	Galena.
1. Dumped material from hand-picking and jigging, . .	0.84 per cent.
2. Tailings from buddles and tables, ...	1.03 "
3. Slime suspended in waste water, ...	0.875 "

To even partially recover that contained in the first class coming from hand-picking and jigging would necessitate further reduction by rolls or stamps for the respective classes, and further handling by jigs, buddles, tables, etc. It is very properly considered that the expense of recovering it would exceed its value. It seems probable that the figure for the second class of loss might be materially reduced by laying down more perfect apparatus than their present buddles and tables. The figure for the third class they expect to reduce by increasing the number of slime and clearing pits, and have probably done so already.

From these analyses they reckon the absolute dressing loss in galena during 5 months at 4083 centners (204 tons), which they distribute as follows:

	Galena contained.
1. Dumped material from hand-picking and jigging, . .	576 centners.
2. Tailings from buddles and tables, ...	3347 "
3. Slime suspended in waste water, ...	160 "

But they obtained 43,552 centners (2122) tons of the galena in the ore in a concentrated form. The dressing loss, therefore, referred to galena in the ore alone, was equal to 9.375 per cent., or, as before stated, 4.14 per cent., if referred to the total ore. They profess to be very well satisfied with this result, and may well be so, for their figures show close work. They propose, however, to better these figures, and the amount of galena contained in the tailings from their buddles and tables point clearly to a very necessary change of method and apparatus.

JET PUMPS FOR CHEMICAL AND PHYSICAL LABORATORIES.

BY ROBERT H. RICHARDS, PROFESSOR OF MINING, MASSACHUSETTS INSTITUTE OF TECHNOLOGY, BOSTON.

(Read at the Amenia Meeting, October, 1877.)

DURING the winter of 1868–9, I was called upon by Professor F. H. Storer, to put up the Bunsen filter pump in the chemical laboratory of the Masschusetts Institute of Technology. As the laboratory is on the lower floor, it was found necessary to use a great deal of cumbrous pipe and apparatus to get the necessary column. It was then suggested that if an instrument could be devised which would make use of the hydrant pressure in the service-pipe, it would do away with the objectionable features of the Bunsen pump.

After using the Bunsen pump for some years, the jet pump to be described in this paper was devised, and it has since been adopted by Prof. Wing in the quantitative laboratory of the school. I am much indebted to Prof. Wing for his aid in starting the manufacture in brass of these jet pumps, which are now to be had in Boston.

The jet pump much resembles the Giffard injector in form. It differs from it in the fact that water is the impelling fluid, and air the impelled, while with the injector steam is used to impel water. The principle of condensation of steam, which is availed of in the injector, is entirely wanting in the jet pump.

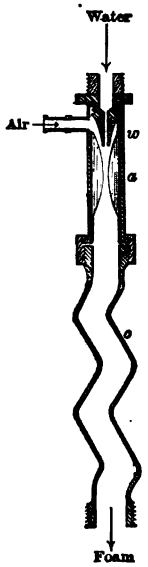

The jet pump consists in a water jet, *w*, (see figure), a constriction or waist, *a*, and a waste tube, *o*.

The success of the jet pump depends on the following conditions:

1. The relation between the sizes of sectional area of *a* and *w*.

2. The proximity of *a* and *w*.

3. The form and angle of the two hollow cones whose vertices make the constriction *a*.

4. The relative size of sectional area of *w* and *o*.

5. The zigzags, or an equivalent means of making foam.

In the following discussion, let *a*, *w*, and *o* represent the diameters of these parts of the jet pump.

A number of experiments were tried to ascertain

what was the best relation between w and o, from which it was decided that when

$$w^2 : o^2 = 1 : 15$$

a good foam was produced in o, but if the proportions were much increased, the foam ceased to fill the bore of the tube, and the pump ceased to work.

The zigzag bends or some equivalent means of lashing the water-jet into foam, are needed to start the operation of the pump, for without them, the water-jet would come through a and o, intact as a cylinder of water, and would escape at the outlet without doing any work, but by breaking the jet into foam, a partial exhaustion is at once made in the vacuandum, which causes the foam to rush back to a, and as soon as this is accomplished, the jet pump begins to operate in good earnest, and the issue between the water and air takes place, as it should do at a.

The angle of the cones was determined by running a jet of water into a beaker of water, the jet being held just above the surface of the water, the diverging angle of the foam resulting was carefully measured, and was found to be from 14° to 17°, and not to vary with the pressure of the water in the jet. Accordingly, the waist is now made of two cones, with an angle of 17° each. As to the proximity of a and w in small jet-pumps, about $\frac{1}{4}$ inch was found best, but while it was not found that any one distance was better than all others, it was clearly demonstrated that this distance should not be too great, else the water-jet will lose its identity before it gets to a, and the pump will fail to work.

To determine the relative sizes of w and a, that would do the best work, a large number of careful experiments were tried, with different ratios, of $a^2 : w^2$, and with different pressures of water, and from these experiments, the conclusion was reached, that to make the best average jet pump to do average work with average water pressures, the ratio between the two should be

$$w^2 : a^2 = 1 : 2$$

Accordingly, the jet pumps now made in Boston, are of this proportion.

The jet pump may be used either as an air pump for exhaust, or as a blower. When used as an exhaust, it is simply screwed to the hydrant, and the vacuandum is attached to the side tube, where the air enters by rubber tube.

The jet pump may be used very well to aerate fresh water aquaria

by conducting the foam in the waste-pipe to the bottom of the tank.

When used for a blast, it requires an additional piece of apparatus (see figure) which will serve to separate the air and the water from one another, delivering the air to the blast lamp and the water to the drain. The dimensions of this cylinder are all given in inches in the figure.

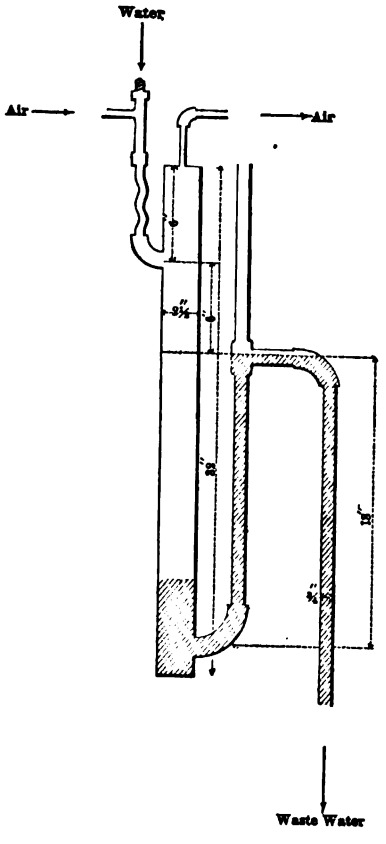

Thus far I have devoted myself to the description of the apparatus, simply stating that certain points had been proved, by experiment. The paper, however, would not be complete unless some of the more important experiments were alluded to. Among them, those most worthy of notice were made to ascertain the best relation of sectional areas between w and a. At the outset, it was assumed that the contest which takes place at a, between the water at a pressure of P. and the air at a pressure of p. (=766mm.) was, when the vacuum had been obtained, in the nature of a statical balance of powers, and that it would be expressed by

$$P \times w^2 = p \times a^2 \text{ or } \frac{P}{p} = \frac{a^2}{w^2}$$

where P = water pressure per sq. in., p = air pressure per sq. in., w is diameter of the water-jet, a is diameter of the waist or air-constriction, and o diameter of the zigzag waste-tube.

The following experiments were made with the intention of proving or disproving this theory:

Seven jet pumps were very carefully made in series of glass, having $a^2 : w^2$ varying, as will be seen in the table below:

TABLE I.

	w. inches.	a. inches.	o. inches.	Ratio $w^2 : a^2$
No. 1, ...	.068	.068	.250	1 : 1
" 2, ...	.0612	.075	.240	1 : 1½
" 3, ...	.055	.078	.230	1 : 2
" 4, ...	.052	.090	.230	1 : 3
" 5, ...	.0425	.085	.250	1 : 4
" 6, ...	.040	.090	.270	1 : 5
" 7, ...	.0635	.246	.254	1 : 15

These dimensions were all taken with the utmost care, with the Brown & Sharpe micrometer gauge, and I feel sure that the error does not exceed .002 of an inch, and probably in most cases is less than .001 inch.

These jet pumps are all of them capable of giving very nearly the vacuum less the tension of aqueous vapor, provided they have enough water pressure, and it stands to reason that each jet pump will have its own limiting water pressure, that is to say, a pressure below which it will not produce its best vacuum. Experiments were made to ascertain the limiting pressures for the above jet pumps. The limits obtained for all but No. 7 are as follows:

TABLE II.

	Ratio $w^2 : a^2$	p. Air tension.	P. Limiting water pressure.	Height of Barometer.
		mm.	mm.	mm.
No. 1, ...	1 : 1	741½	1448	764
" 2, ...	1 : 1½	743	1457	766
" 3, ...	1 : 2	741	1608	762
" 4, ...	1 : 3	734½	2292	764
" 5, ...	1 : 4	738	2378	764
" 6, ...	1 : 5	734	2774	762
" 7, ...	1 : 15	175	2301	764

The limiting water pressure is expressed in terms of the number of mm. mercury that would balance it. This method of recording was employed, in order to bring the water pressure = P into the same denomination as the air pressure = p.

The above figures then should give us the means of ascertaining if our formula,

$$P \times w^2 = p \times a^2,$$

is true; for we have the ratios of $a^2 : w^2$ as they were made in seven jet pumps, and we have also the amount of water pressure required to balance a certain air pressure. By computing the ratios of air pressure to water pressure, we get the following table for comparison:

TABLE III.

	Actual ratio p.: P. air pressure: water pressure.	Ratio of $w^2 : a^2$	Difference between pressure and area ratios.
No. 1, ...	1.954	1.	+ .954
" 2, ...	1.961	1.5	+ .461
" 3, ...	2.170	2.	+ .170
" 4, ...	3.120	3.	+ .120
" 5, ...	3.220	4.	— .780
" 6, ...	3.763	5.	—1.207
" 7, ...	13.148	15.	—1.852

From the above table it would at first appear that there was a systematic error which is a maximum in positive direction in No. 1, and in negative direction in No. 7, and passes by the stage of no error at all between Nos. 4 and 5. This apparent anomaly can, I think, be perfectly explained, however, by referring it to two opposing causes, one of which gets the upper hand with the first set of numbers, while the other does the same with the last. The first of these forces is friction which serves to lessen the effective water pressure. The second is an additional atmosphere of pressure which is called into play as soon as the approximate vacuum is obtained, and which, while it does not show on the water-pressure gauge at all, nevertheless, does exist and adds to the water pressure nearly a whole atmosphere above that which is recorded on the gauge. Ample evidence of the presence of this atmosphere may be obtained by testing the amount of water which passes through a jet pump when there is no exhaustion, and again when it is attached to a vacuous receiver. It will be found that when attached to the vacuous receiver, it invariably discharges much more water than when it is not, even though the water gauge remains the same.

Our formula should, therefore, be written,

$$\frac{w^2}{a^2} = \frac{P + p - f}{p}$$

If we solve this equation for the different jet pumps as recorded in Table II, and obtain values for f, we shall obtain the following table, which probably expresses the real relations of the forces more correctly than does Table III.

TABLE IV.

	P+p.	p.	Ratio $w^2 : a^2$	Ratio $\frac{P+p-f}{p}$	Value of f required to realize last column.
	mm.	mm.			mm.
No. 1, ...	2189.5	741½	1 : 1	1 : 1	+1448.
" 2, ...	2200.	743	1 : 1½	1 : 1½	+1085.5
" 3, ...	2349.	741	1 : 2	1 : 2	+867.
" 4, ...	3026.5	734½	1 : 3	1 : 3	+823.
" 5, ...	3116.	738	1 : 4	1 : 4	+164.
" 6, ...	3508.	734	1 : 5	1 : 5	—162.
" 7, ...	2476.	175	1 : 15	1 : 15	

That the last item comes a negative quantity (–162) is against the theory of the two opposing forces, but it is not unlikely that it may be an error due to a lack of perfect centring of the jet or some other such cause.

Tests were made to ascertain the relative amounts of air and water that passed through the different sizes of aspirator, the air being held at about 76 mm. tension. The results are as follows:

TABLE V.

	Tension of air.	Pressure of water.	Time.	Amount of air.	Amount of water.	Ratio, air volume to water volume.
	mm.	mm.	minute.	cc.	cc.	
No. 1, ...	76	787	1	512	1837	3.588
" 2, ...	76	639	1	335	1390	4.015
" 3, ...	76	771	1	578	1227	2.123
" 4, ...	120	1686	1	900	1644	1.826
" 5, ...	98	1749	1	634	1016	1.602
" 6, ...	76	2133	1	757	1010	1.466

Another series of tests with the air at 414 mm. tension is as follows:

TABLE VI.

	Tension of air.	Pressure of water.	Time.	Amount of air.	Amount of water.	Ratio, air volume to water volume.
	mm.	mm.	minute.	cc.	cc.	
No. 1, ...	414	1125	1	332	2266	6.825
" 2, ...	414	977	1	182	1840	10.110
" 3, ...	414	1109	1	225	1469	6.524
" 4, ...	414	1980	1	383	1754	4.551
" 5, ...	414	2065	1	470	1108	2.351
" 6, ...	414	2467	1	520	1160	2.357

From which it appears that the higher ratios of $w^2 : a^2$ are much more economical in water, provided a proportionally higher pressure of water is accessible.

A trial was made with aspirator No. 6 ($w^2 : a^2 = 1 : 5$), to ascertain how long it would require to exhaust the air in a vessel of known size. A bottle having some water at the bottom, but with 1145 cc. air space above the water, was used. Before the test, the jet pump drew the mercury up to 739 mm. in two minutes. When attached to the bottle of 1145 cc. capacity, its times were as follows:

TABLE VII.

Pressure water.	Time.	Exhaustion of bottle.
mm.	minutes.	mm.
2774	1	460
2774	2	549
2774	3	633
2774	4	676
2774	5	703
2774	10	734
2774	20.	739

The water was effervescing quite briskly at the end. A flask twice as large would require twice as long to produce the same effect.

The following tests were made to ascertain the maximum exhaustion that the aspirators would give:

TABLE VIII.

	Temp. of water.	Air tension.	Add. tension aq. vapor.	Sum last two columns.	Height barom. at time.	Error of the instrument.	Water pressure required.
		mm.	mm.	mm.	mm.	mm.	mm.
No. 1, ...	74°	744	21.7	765.7	767.2	1.5	2544
" 2, ...	73½°	744	21.39	765.39	767.2	1.81	2544
" 3, ...	74°	744	21.70	765.7	767.2	1.50	2647
" 4, ...	73°	741½	21.09	762.59	767.2	5.11	2644
" 5, ...	73°	738½	21.09	759.59	764.	4.41	2378
" 6, ...	72°	734	20.47	754.47	762.	8.53	2774

Tables Nos. V, VI, and VIII indicate that while the higher ratios (viz. No. 5) yield larger quantities of air relatively to the water, they do not produce so perfect an exhaustion.

I am aware that others have made jet pumps to work on air with water, but I feel sure they will find some novelty, and I hope some information in this paper.

ON "BUCKSHOT" IRON.

BY F. P. DEWEY, NEW HAVEN, CONN.

(Read at Amenia Meeting, October, 1877.)

AT the Wilkes-Barre Meeting of the Institute, Dr. J. Lawrence Smith, in the course of his remarks on some peculiarities in the composition of irons, alluded to the so-called "buckshot" iron, and exhibited a specimen of this material. He said that when the small granules, or shot, were separated from the mass, they could be flattened under the hammer, and inferred that these particles had been decarburized by the blast before sinking into the hearth of the furnace, and thus we had the exceptional production of wrought iron in the blast furnace.

I have recently obtained a characteristic specimen of this variety of iron from one of the furnaces at Orbisona, Pa. Considerable uncertainty existed as to its true nature and the conditions of its production. Its weight seemed to preclude the idea that it contained much or any slag, yet its lack of strength indicated that it was not homogeneous cast iron. At times considerable quantities had been produced, which could only be utilized by charging in the furnace and remelting. The specimen, on the freshly fractured surface, appeared to consist of flattened globules of iron cemented together by a bluish material which one would naturally suppose to be slag, and qualitative examination for lime strengthened this supposition.

It was quite difficult to obtain drillings, as there was a tendency to split in several directions as soon as pressure was applied; but enough was obtained to undertake quantitative determinations. They were found to consist of two portions—one attracted by the magnet, and the other not. By repeated separation the magnetic portion was found to be 94.44 per cent., and the non-magnetic 5.56 per cent.

Analyses of these gave the following results:

Magnetic Portion.	Per cent.	Non-magnetic Portion.	Per cent.	
Graphite,	3.430	Lime,	71.41	O = 24.028
Combined carbon,	0.260	Magnesia,	trace.	
Silicon,	2.790	Protox. of iron,	trace.	
Phosphorus,	0.412	Sulphide of calcium,	8.87	S = 1.72 O = 3.440
Sulphur,	0.292			27.468
Copper,	0.110	Sllica,	24.62	O = 13.131
Manganese,	0.500		99.90	
Iron (by dif.),	92.206			
	100.000			

Considering the sulphur to replace oxygen in the lime of the silicate, the oxygen ratio of the base to the acid is 2.09 : 1 or 2 : 1; whence the formula $(R''O)_4SiO_2$. The ratio between the oxygen of the lime and the oxygen equivalent of the sulphur in the sulphide is 7.09 : 1 or 7 : 1; hence the full formula should be $(CaO_{\frac{7}{8}}+CaS_{\frac{1}{8}})_4SiO_2$.

A large number of separate globules were treated with hydrochloric acid, but none failed to leave a carbonaceous residue. From these experiments the specimen examined is shown to be a mixture of ordinary carburized iron, and a highly basic subsilicate of lime, and its production is doubtless caused by an excess of lime in the charge, a thick and semifluid slag being thereby formed which does not allow the perfect separation of the iron. While it is not impossible that the iron in the product of such an abnormal furnace process may sometimes be partially decarburized, it is not necessary to assume this decarburization to explain the formation of this product.

For the determination of the total carbon, A. S. McCreath's method of decomposing the pig-iron with cupro-ammonic chloride and combustion of the residue in chromic acid* was used, and for the graphite treatment by boiling for half an hour in nitric acid,† and combustion of the residue, as before, in chromic acid. The sulphur was determined by Dr. Drown's method of using potassic permanganate to absorb the hydric sulphide‡ evolved by the action of hydrochloric acid.

REPORT ON A STANDARD WIRE GAUGE.

(Read at the Amenia Meeting, October, 1877.)

THE Committee on a Standard Gauge have been constantly engaged, since their appointment, in the duties assigned to them.§ They have corresponded with different persons interested in the manufacture and use of gauges in this country, and have received from several of them important information.

They have also entered into correspondence with the governments of England, France, Germany, and Russia through their Consuls, and with Austria directly. The Consuls of Germany and France

---

* Transactions, Vol. V, p. 575.
† Transactions, Vol. III, p. 43.
‡ Transactions, Vol. II, p. 224.
§ See Transactions, Vol. V, p. 48.

have taken the greatest interest in the matter, and have communicated to your committee a large amount of valuable information relating to the gauges used in their countries. Prof. Tunner, of Leoben, Austria, one of our honorary members, has communicated information relative to the uses of gauges in Austria. The replies to the communications addressed by the English and Russian Consuls to their respective governments, have not, as yet, been received.

Your committee commenced its labors, having in view to find a gauge which should be simple in its construction, not readily worn, capable of easy adjustment, and not too expensive to be used by the ordinary workman. With this in view, they have examined a large variety of gauges, and believe that all those in general use in the United States have passed under their inspection.

They find, as the result of their examination, that, although there are a great number of patterns, most of the gauges in general use differ but slightly in principle. The different systems may be divided into two general classes. These are—*first*, fixed; and, *second*, movable gauges.

Of the fixed gauges, there are three general types. These are, first, those made with slots, open at one end, the sides of which are intended to be parallel, as the ordinary wire gauge; second, those made with round holes in a plate, with or without a plug, corresponding to each hole to check the size, such as the Whitworth gauge, and the Stubbs wire gauge, better known in this country as the "twist drill" gauge. In both these kinds of gauges, the slots and holes are designated by numbers.

The third kind of fixed gauge consists of a V, either cut into a sheet of steel, or formed by placing two bars of steel together at one end, and leaving them open at the other a fixed distance.

Of the movable gauges there are two types: sliding calipers with verniers, with or without a micrometer screw for adjustment, and the micrometer screw gauge.

Your committee find that the gauges which are characterized by round holes or slots, designated by numbers, are only approximately correct. They not only differ according as they are made by different manufacturers, but in a package of a dozen made by the same manufacturer there were often very perceptible and annoying differences. They find that in the gauges with open slots the sides are rarely parallel, and that there are even greater variations in them than in the gauges made with closed round holes without plugs. They find that the numbers affixed to the slots and holes vary so

much, on account of the differences in the width of the slots, and in the diameter of the holes, as to be a constant source of inaccuracy, uncertainty, and annoyance. This variation has, in certain cases, been found to amount to as much as 50 per cent. of the weight of different wires of the same number which have been examined. It is, therefore, impossible to make even an approximative comparison of sizes, unless, besides the number, not only the kind of gauge, but also the name of the maker, is specified, and even then this approximation cannot be relied upon when the gauges have been worn from constant use or bad tempering.

The best example of the round holes with plugs is the Whitworth gauge, which is made of a thick plate of tempered steel. Each hole of the gauge is provided with a hardened steel plug, which fits it exactly. In all the recent gauges of this kind the system of numbers is abandoned. The plug is made of a given diameter, which is stamped in figures on each one. These diameters generally, vary by thirty seconds, sixteenths, eighths, quarters, and so on, each size having a hole and plug of its own, so that a complete set will consist of as many holes and plugs as there are fractional parts. To obviate the difficulty of the indefinite repetition of the plugs, they are sometimes made so that when any two, or even three, plugs are placed together they will exactly fit the hole corresponding to the sum of their diameters. This arrangement is made to insure accuracy, as the multiplication of a very slight error would prevent even two plugs from fitting the hole corresponding to the sum of their diameters. When well made, this gauge is an instrument of precision; but it is evident that, in order to have such a gauge even moderately accurate, it must be a very expensive instrument, and altogether beyond the reach of an ordinary workman, or even of a manufactory with a small capital; and that from the indefinite multiplication of holes and plugs, it must necessarily be very cumbersome. When they are used, there must always be two such gauges, one for comparison and one for use, and when the gauge is only very slightly worn it ceases to be an instrument of precision, and is then open to all the objections of the ordinary gauge with fixed holes.

Your committee, very early in the course of their investigation, formed the opinion that no reliance whatever was to be placed on the numbers of gauges, as an indication of size, except for the individual gauge to which the number was attached; and that the only accurate and scientific way of expressing the size of an article to be gauged was by some expression of its diameter, which should be

more exact than numbers, and which would allow of an accurate comparison of all the dimensions by whatever gauge they were taken.

Your committee are supported in this opinion by the present practice among some European manufacturers who have recently acted in this matter, who have decided that a given number on a gauge shall correspond to a given diameter expressed in fractions of the legal standard of length of the country; but as, in all fixed gauges made for ordinary commercial use, the diameter can only be approximately expressed, neither the number nor the diameter is ordinarily correct, so that there is a double source of inaccuracy, as the number does not express the exact diameter, nor the diameter the number.

Owing to the great liability to error, and the impossibility of correcting it, even in the most elaborate forms of this kind of gauge, your committee, early in the course of their investigation, after having themselves examined a large number, and having had communicated to them the results of examinations made by others, dismissed this class as being unsuitable, either from their defective construction, the impossibility of adjusting them when out of order, or their great cost, from their consideration as a standard gauge.

Your committee next turned their attention to the V gauge, which is made by placing together two pieces of hardened steel, so that they touch at one end, but are open a given distance at the other, the numbers or diameters corresponding to the opening being graved upon one or both sides. The accuracy with which measurements can be made with this gauge when it is new, and the jaws properly tempered, adjusted, and fastened, is surprising. Exceedingly minute differences even in the diameters of the same wires can be detected and measured with great nicety, but by constant use the gauge wears unevenly. It must then be taken apart, reground, and readjusted, which will generally cost more than the gauge is worth. Your committee, while having the highest opinion of it for ordinary purposes, after some months of study abandoned the idea of recommending it as a standard gauge.

Their attention was then turned to the other two kinds of gauges, namely, the sliding gauge with a vernier, with or without a micrometer adjustment, and the gauge known as the micrometer gauge. The advantage of these gauges is great accuracy. The sliding gauge with a vernier necessarily wears; but the error of wear can be ascer-

tained and allowance made for it, so that accurate measurements can always be made with it when it is worn.

In the micrometer gauge the wearing surfaces are so arranged that they can be adjusted with ease in a few moments. The wear between the male and female parts of the micrometer can be adjusted by a binding-screw. This adjustment can be repeated as often as required, so that the instrument will read with great accuracy until it is worn out.

Your committee assured themselves, by actual trial, that with such a gauge boys can very easily be taught to read the thousandth of an inch or the fortieth of a millimeter, and that it is practicable to read even the eightieth of a millimeter.

The micrometer gauge is of these last two gauges the simplest. It consists of a micrometer screw, C, with a vernier attachment on D, is susceptible of easy adjustment, is not likely to wear, is not complicated, is less likely to get out of order than the other gauges, is more easily read, and requires less skill to read it than the sliding gauge with a vernier. Your committee are, therefore, of the opinion that this gauge, which is shown in the annexed cut, is the gauge which should be adopted as the standard gauge.

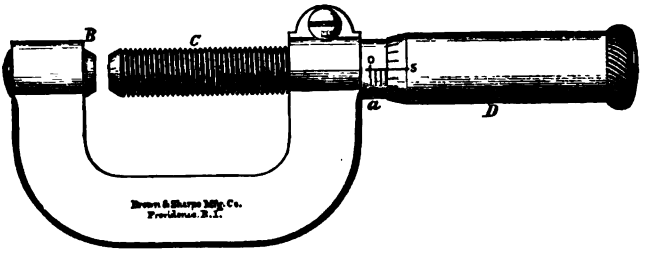

They are of the opinion that all gauges should be graduated so as to read fractions of an inch or of a millimeter, and that the sizes should be directly expressed as the only means of insuring correct measurements, and not by numbers, which constantly lead to error. That this, while it insures great accuracy, presents no difficulty in practice, is shown by a number of experiments made during a period of several months, to ascertain the practical difficulty in the way of the adoption of this method by a member of your committee. The sizes of some of the steel bars, the orders for which were expressed in thousandths of an inch, are given below.

Sizes expressed in Decimals of an Inch, taken at random from the Order-book of a Manufactory:

15.5 × .014	3.00 × .0145	2 25 × .059
15. × .02	3. × .018	2.25 × .046
15. × .014	3. × .02	2.25 × .040
5.25 × .061	3. × .0125	2.25 × .038
4.50 × .062	2.75 × .030	2.25 × .055
4. × .024	2·75 × .051	2.25 × .020
4. × .022	2.75 × .035	2. × .018
4. × .071	2.50 × .059	1.50 × .032
3.475 × .062	2.50 × .022	.75 × .095
3.25 × .01	2.25 × .031	.25 × .062

The trial of this system by some of the manufacturers has resulted in banishing all the old forms of gauge from their workshops.

The conclusions which have been arrived at, for the most part independently, by the different members of your committee, and in which they unanimously agree, are:

1. The abandonment of the system of fixed gauges for commercial use.

2. The abandonment of the system of representing the diameters and sizes by numbers.

3. The adoption of the system of expressing sizes in thousandths of an inch or fractions of a millimeter.

4. The adoption of the micrometer gauge as the method of measuring sizes.

Your committee beg to acknowledge their indebtedness to J. B. Knight, Secretary of the Franklin Institute in Philadelphia, for the reports of various committees on gauges to the Franklin Institute; to C. Hewitt, Esq., President of the Trenton Iron Company, for a large number of measurements of wire made with different gauges; to P. Ritter Von Tunner, of Austria, for the description of the kind of gauges used in Austria; to the German Consul, for his interest in procuring from Germany a report of their gauge system; to the French Consul, for his interest in the work of the committee; and to the Minister of Agriculture, Commerce, and Public Works, for a complete description of the gauge system as used in France.

Your committee is, however, particularly indebted to Darling, Brown & Sharp, of Providence, who have loaned to them without charge all the gauges which they manufacture, for comparison, and have contributed besides a very large amount of information on various matters connected with this subject. All of which is respectfully submitted.

T. Egleston, Chairman.
Wm. Metcalf,
Jos. D. Weeks.

ANALYSES OF SOME TELLURIUM MINERALS.

BY E. P. JENNINGS, CORNELL UNIVERSITY, ITHACA, N. Y.

(Read at the Amenia Meeting, October, 1877.)

THE abundance and value of the tellurium minerals of Colorado is well known, but, as yet, few analyses have been made of them, and I offer these as a small contribution to the chemistry of these valuable ores.

1. *Native Tellurium.*—The specimens from which the analyses of this mineral were made are from the "John Jay" Mine, Boulder County, Colorado, where it occurs in quite large masses, though mixed with more or less silica and iron pyrites. It is usually a fine-grained, tin-white mineral, but sometimes occurs in distorted, hexagonal prisms in cavities in the quartz. Before the blowpipe it gives the reactions for tellurium, sulphur and iron; by cupellation, it yields a small amount of gold. An analysis of a coarsely crystallized specimen gave the following results:

Specific gravity, 5.105.	
Tellurium,	58.40
Gold,	1.86
Iron pyrites,	24.92
Ferric oxide,	4.37
Silica and silicates,	11.54
Silver, lead, and mercury,	traces.
	100.59

Deducting the pyrites, iron oxide and silica, we have for the composition of the mineral:

Tellurium,	97.73
Gold,	2.27
	100.00

Or, considering the gold to be in combination with tellurium to form sylvanite, we have:

Native tellurium,	95.50
Sylvanite ($Au_2 Te_3$),	4.50
	100.00

An analysis of another specimen from the same mine, and of but slightly different appearance, gave the following results:

Specific gravity, 6.346.	
Tellurium,	71.86
Gold,	7.36
Lead,	4.81
Silica and silicates,	13.86
Ferric oxide,	1.53
Iron pyrites,	.88
Silver and lead,	traces
	99.80

Deducting the silica, pyrites and oxide of iron, we have for the composition of the mineral:

Tellurium,	85.43
Gold,	8.81
Lead,	5.76
	100.00

Assuming the mineral to be a mixture of native tellurium, sylvanite and altaite, we will have:

Native tellurium,	78.21
Sylvanite ($Au_2 Te_3$),	17.46
Altaite (Pb Te),	9 33
	100.00

2. *Sylvanite.*—I have analyzed only a single specimen of this mineral, obtained from the Smuggler Mine, Boulder County, Colorado. In appearance it resembles somewhat the native tellurium from the John Jay Mine, but is more of a lead-gray color, and is not so fine-grained. Before the blowpipe it gives the reactions for tellurium and gold, the gold being light-colored from the large amount of silver it contains.

An analysis gave the following results:

Specific gravity, 8.565.	
Tellurium,	28.16
Gold,	10.04
Silver,	4.08
Zinc,	.31
Silica and silicates,	55.79
Ferric oxide and alumina,	1.36
Cobalt and lead,	traces
	99.69

Deducting the silica, oxide of iron and alumina, and assuming the small amount of zinc to be combined with tellurium, we have:

Tellurium,	66.20
Gold,	23.60
Silver,	9 47
Zinc,	.73
	100.00

which agrees closely with the formula of sylvanite $(Au,Ag)_2Te_3$.

ON PULVERIZED ZINC AND ITS USES IN ANALYTICAL CHEMISTRY.

BY DR. T. M. DROWN, LAFAYETTE COLLEGE, EASTON, PA.

(Read at the Philadelphia Meeting, February, 1878.)

ZINC is, as is well known, very brittle at a temperature of about 210° C. (410° F.), and may then be readily pulverized in a mortar. By sifting it may be obtained of uniform grain. I have been accustomed to prepare products passing through 40, 60, and 80-mesh sieves, and also by bolting through a fine handkerchief.

The principal analytical uses to which I have hitherto applied this material are to the reduction of iron directly from the ore by heating it with the pulverized zinc, and the reduction of ferric to ferrous compounds in solution.

In the first case the pulverized ore, 0.5 gram or less, is intimately mixed with about ten times its weight of the pulverized zinc (the finer the zinc the better), in a porcelain crucible, and this mixture is covered with about the same amount of zinc. The crucible is then heated at the top of the flame of a Bunsen burner, at a dull red heat, for about ten minutes. The crucible should not be covered. When cool, the crucible, with its contents, is placed in a flask treated with hot dilute sulphuric acid, and brought quickly to a boil. The zinc and reduced iron are dissolved in a few minutes and the flask is then tightly corked and allowed to cool. When cool, the iron is directly titrated by potassium permanganate.

It has been found necessary to roast ores containing organic matter in the crucible before adding the zinc, otherwise the final solution will be too dark to titrate. It was also occasionally found that in cases where there was no organic or carbonaceous matter in the ore, that the solution was very dark; and it was found, after a number of experiments, that this blackening came from the decomposition of the carbonic acid from the combustion of the gas. This has been obviated by making a thick coating of very fine zinc, or by a cover of pulverized borax glass, which fuses, and protects the mixture beneath from the action of the products of combustion of the gas.

The following results have been obtained from this process:

In a Brown Hematite.

By zinc method, . . 48.63, 48.72, 48.71, 48.74, 48.83, 48.69 per cent.; mean, 48.72
By reduction by hydrogen (after previous oxidation with oxygen gas) at a red heat, 48.74 per cent.

In a Magnetite.

By zinc method, ... 67 19, 67.06, 67.59; mean, 67.28
By hydrogen method, ... 67.32

The use of pulverized zinc of somewhat coarser grain is very advantageous in the reduction of iron to the ferrous condition in solution. Any one who has used granulated or plate zinc knows of the trouble often experienced in effecting complete reduction and in dissolving the last traces of the zinc. The large surface exposed by the granulated zinc insures complete reduction in a short time, and the small size of the grain is a guarantee that its final solution will not be tedious. The practice is to add to the ferric solution, in a flask, 5 grams of 40-mesh zinc. There should be but a very small excess of sulphuric acid, so that at the end of an hour or two only about half of the zinc will be dissolved. Then more sulphuric acid is added, and the solution quickly boiled, and the process conducted as above.

I have tried the "blue powder" from zinc works as a substitute for the pulverized zinc, but the results are not, as a rule, as satisfactory. I have found the pulverized zinc useful in treatment of sulphurets to render them soluble in hydrochloric acid, and I have other experiments in progress in the treatment of ores and minerals. It is probable, too, that other metals in finely divided form, as iron reduced by hydrogen, may have uses in analytical chemistry.

A MINING LABORATORY.

BY ROBERT H. RICHARDS, PROFESSOR OF MINING, MASSACHUSETTS INSTITUTE OF TECHNOLOGY, BOSTON.

(Read at the Wilkes-Barre Meeting, May, 1877.)

THE Institute of Mining Engineers has shown so much interest in the educational problem of profitably combining theory and practice, that it seems especially appropriate to lay before its members the methods and aims of the mining laboratory of which I have charge, and in which one form of combination of hand with head work is now being tried. If anything may be contributed toward the solution of this problem by the discussion which follows, my purpose will be attained.

Whether it was wise or not to establish a mining school so far from the principal mining centres, does not now enter into the question. Given, a mining school already begun, how shall it be made most efficient in developing engineers who are trained to think for themselves as well as versed in the works of others? This is the question with which we have had to deal.

In considering the bearing of this laboratory work upon the students' preparation, it will be convenient to take it up under five different heads:

1. The methods and aims of the laboratory.
2. The advantage to students of having a part, at least, of their practical work in the curriculum of their school.
3. The advantage to be derived by mines and works.
4. Degree of accuracy which may be attained in working ores on a small scale.
5. Results of work in the laboratory.

1. *The Methods and Aims of the Laboratory.*—During the May meeting of 1873, held in Boston, I had the privilege of reading before you a paper stating the plans and aims of this laboratory. Since that time we have been constantly following out those plans, and are more than ever convinced that we are working in the right direction. We do not feel that the time we have spent has been in any sense thrown away. Perhaps the aims of the laboratory can be most clearly shown by illustration. Many young engineers leave school thinking that they know everything. They go to the works, and expect to teach the superintendent something and the men a good deal, regardless of the fact that it is this spirit that has prejudiced workmen against schoolmen. They are often more trouble than they

are worth for a considerable period of time. They have simply learned metallurgical processes from books, but they have not derived from them a realizing sense of the meaning of the word economy, nor do they understand how to carry it out in actual practice. They are too apt not to perceive that the profit of works lies in the little savings in material, in labor, in time and power, etc., and that the difference between making these little savings and in not making them is almost always the difference between profit and loss, or between success and failure. In fact, our young engineers are not, as a rule, fully enough aware of the fact that failures in mines and works are quite as often the result of errors in judgment as they are from poverty of the deposit or process.

The aim of this laboratory is to correct this state of things, and to turn out men who have learned somewhat of the value of economy; who have found out by *their own* experience that little losses, taking place here and there and everywhere in their work, mount up enormously in their final account of stock.

For the sake of example, we will suppose that a silver-lead ore is given to a student who is entirely inexperienced in such matters, and who is inclined to be self-sufficient. On reading up, he finds that such ores, when worked on the large scale, are subject to a loss, which we will say is 15 per cent. of the silver, and which takes place largely in the smelting. He is surprised at this, and thinks it is a large loss, and expects to do as well or better. On taking account of stock, however, we will suppose he finds his losses are: silver in dust while crushing and handling, 2 per cent.; roasting, 15 per cent.; agglomerating, 3 per cent.; smelting, 15 per cent.; fume in refining, 2 per cent.; handling in refining, 6 per cent.; fume in cupelling, 4 per cent.; parting and recovering, 3 per cent.; total, 50 per cent.

He is astonished to find that his total loss amounts to 50 per cent., and that by carelessness in handling alone, he has lost 11 per cent., the whole of which might have been obviated as well as not; that in roasting he used too high a heat, and in cupelling the same; that by having large condensing flues, he might have saved a large proportion of the loss in smelting and refining.

In fact, this man has either learned a lesson in the economy of metal working that will last him his life, or he has failed to learn it. In either case, whatever may be the risk incurred by a works in taking an untried man from a school, the risk is in some degree lessened by this test of the man. We believe that ability to offer to works a selection of men is all the incentive we need for developing

this laboratory. We hold that the school owes a duty to the works as well as to the student, and that the supplying of works with good men is fully as important a duty of the school as the finding of places for the student.

The methods of working the laboratory will best be given by a brief description of the last year's work. The course began in February with a class of thirteen students. The work was allotted so that each student had the entire responsibility of a whole process or of a part of a process.

A quantity of low grade ore from the Merrimac Mine, weighing 4½ tons, was treated first.

Two students, A and B, took charge of the mineral examination, and of the crushing and washing. They were assisted in the washing by their whole class, who had this opportunity to operate the washers, and to make themselves familiar with the principles on which they work. The class came on, five men at a shift, and they worked ten shifts of four hours each; in this way every man had an opportunity to work and to study every machine.

The captains, A. and B., meantime took charge on the alternate shifts, so that one of them was always on hand to keep watch, and to see that waste did not take place, that samples were taken at the proper intervals, and that everything went on as it should. When the work was through, they dried, weighed, sampled, and assayed all the final products. They found out then whether the refuse was poor enough to throw away. They found out which machine did the greatest work, and which the least. In fact, they were in condition to report upon the economy of the process from beginning to end. They afterward made numerous tests on sands falling into water, and speculated on possible alterations which would be desirable if the washers were to be used exclusively for the ore in question. These tests were rendered possible by means of a series of samples which had been taken at every stage of the process. A, reported especially upon the crushing machines and the washing jigs, while B, reported upon the spitzkasten and on the tables which were used in washing.

Three products were the result of this treatment:

1. Smelting ore. 2. Middle-grade ore. 3. Refuse.

C. and D. took charge of the smelting ore; this was first roasted in reverberatory furnaces. The whole class came on by shifts of four hours each, and the operation went on night and day continuously until finished. The total time required was 52 hours. C. and D. then agglomerated the ore, sampled it, analyzed it, and

also their fluxes (limestone, tap cinder, magnetic iron ore, etc). They planned their smelting to obtain a given slag, matte, and metal. When it was smelted in the shaft furnace all the class came on by shifts, and by means of this run, and several others during the term, every man was able to serve in every place, and thus to learn the principles which underlie the whole operation, as well as the details by which it is carried on in the laboratory. This smelting yielded—

1. Lead. 2. Matte. 3. Slag.

C. followed up the metal, and turned out silver, lead, and gold. D. followed up the matte, and turned out copper, lead, and silver. Their reports consist of a detail of the operations, results of analyses, and tables showing where, when, and how the losses took place, with suggestions as to how they would mitigate them another time.

E. and F. undertook to work the middle-grade ore, and they tried the Ziervogle, Augustin, Von Patera, as well as roast, chlorination with amalgamation, and a number of other methods. They divided the processes, one taking the responsibility of a part, the other of the rest. They report moderate success in some and dead failures in others.

A sulphuretted ore was allotted to G. and H. This ore, as a matter of course, required to be first roasted. We have two methods of roasting, by reverberatory furnace and by kiln. But as a kiln had never been tried in the laboratory, and as it was to a certain extent doubtful whether it could be made to work, a division was made. G. took the kiln roasting, followed by the subsequent smelting, roasting and smelting, etc., while H. took the method by reverberatory furnace, followed by the subsequent processes. This work was carried on in the same spirit as before indicated.

K. took up nickel, looked up the published methods, and experimented upon its extraction.

L. worked a gold ore by Atwood's amalgamators, concentration, and gas chlorination. This method is still in its experimental condition with us.

M. had a barrel of quartz galena assigned to him.

N. had a barrel of silver ore assigned him, which was to be treated by pan amalgamation.

O. worked out a problem on a copper ore from a mine at Santa Fe. The question to be settled was whether it would pay best to turn out a slag lean in copper, and at the same time a poor copper pig, or to turn out a pure copper pig, and at the same time allow some metal to enter the slag. His results are very interesting.

Thus it will be seen that every student who has worked in the laboratory during the last year has not only had a definite work of his own to do, but has also had the opportunity to watch or to assist in a very considerable variety of other work.

2. *Advantage to the Student of having a part of his Practical Work in the Curriculum of his School.*—We learn by our mistakes. Men can try, and fail; can find out usually why they failed; can repeat the work with the failure in part or in whole corrected. They can learn economy by their own lack of it.

Large works cannot afford to spoil a charge to show a student what happens from a little carelessness. A well-regulated establishment may go on a long time without such a slip, and unless the superintendent is used to giving instruction, and takes pleasure in it, the student may be months at a works without finding out what the key to the success of the establishment is.

Again, a student learns the value of chemistry as a check upon metallurgical work. Who would attempt to run a blast furnace on lead ores or on iron ores without knowing something about the composition of slags and of the fluxes at hand? The students here plan the proportion of the fluxes to be used from their own analyses of the same. And if they find from their reading that a slag of 30 per cent. SiO_2, 45 per cent. FeO, 15 per cent. CaO, 10 per cent. Al_2O_3, should give a good fusion and a slag clear of lead, they put in fluxes containing these elements in the above proportions, and when they get through they analyze their slag, to see if they got what they tried for, and to see if it was as lean in lead as they wished it to be.

But perhaps the greatest advantage of all to the student, and the one which will stay with him through his whole life long, is the spirit of investigation which is awakened by his work, and which is made evident by the questions he asks and by the zest and intelligence with which he carries on his work. This we consider has been proved beyond all question.

We wish to disclaim any pretensions which we may be supposed to have that this laboratory is in any sense of the word a substitute for the works. What we do claim is that it prepares students to go into works and profit by them.

3. *Advantage to Works.*—We have already noticed one advantage, viz., that the men have had a chance to test themselves and find out where they are weak. There is, however, another advantage which may grow out of their experience in the laboratory. These men are used to testing processes on a small scale, and if they are,

when older, called upon to erect costly works and to devise new and expensive processes, they will naturally spend a thousand or two dollars in trying the process practically. Most of us are familiar with large and costly failures which might have been prevented if the process had been studied in this way. For while work on the small scale does not pretend to deal with the relation between the cost of production, of transportation, and the market value, it does test most thoroughly the chemical and mechanical principles on which the process must depend. Again, this practical work enables us to make a far more just division of hand-men from head-men than could possibly be made from recitations and examinations alone. And if we have an application for a man who may by-and-by be needed to superintend, we recommend a very different man from what we do when we were asked for an analyst or a surveyor.

Advantage to Mines of having their Ores treated in the Laboratory.—We will cite one example. The Merrimac Mine of Newburyport has recently called an engineer from a distance to systematize their smelting works. He informs me that the figures furnished by the students were of very great value to him in planning his ore charge. And again, as soon as the mine is prepared to establish washing-works, and the matter is under consideration at the present time, the results of our washers will be at their service.

To sum up what has been said: We believe that such a course of instruction will bring out latent originality if a student has anything of it in his composition, and that, if he is nothing but a copyist, his instructors, as well as the man himself, will be convinced of the fact before he leaves his school; and again, that such instruction will enable him to profit far more by his visits to works, or studies in them, than he otherwise would.

The testimony of graduates of the school and of their employers bears us out in the above statements.

4. *Degree of Accuracy of working Ores on the Small Scale as compared with the Large Scale.*—On the large scale the operations are continuous. If a little is left by one charge, it is taken up by the next one, and does not affect the total. On the small scale, however, what is lost in one charge by carelessness is not picked up by the next, because there is no next charge to follow it. In large works men are chosen to fill places by their skill or aptness for those places. On the small scale the students spend a part of the time of doing the work in learning how to do it. To be sure, they learn vastly quicker than the ordinary hands who are usually employed for such work; but

still this does not wholly make up for their lack of skill in the first instance, nor does it make the small works quite on a par with the large ones in this respect.

5. *Results of Work in the Laboratory.*—The following examples will serve to show the kind of work that is done by the students, as well as the scale of it and the degree of accuracy attained.

A lot of poor ore from the dump heap of the Merrimac Mine of Newburyport, weighing 8485 pounds, was crushed and washed to separate the argentiferous materials from the gangue rock, and yielded these proportions:

1. A smelting ore, . .	weighing	624½ pounds.
2. A middle-grade ore,	"	1823½ "
3. Refuse, ...	"	6016⅛ "

Referring this yield to one ton of crude ore, the intrinsic value of the metals in the products obtained from it would be:

1. Smelting ore, 147.14 lb., containing	89.4	per cent.	lead, or	57 92	lb, or	$3 47
	0.7	"	silver, or	.103	"	1 73
	.0024	"	gold, or	.00853	"	1 06
						$6 26
2. Middle-grade ore, 429.8 lb., containing	9.11	per cent.	lead, or	39.15 lb.,	or	$2 85
	.031	"	silver, or	.133	"	2 13
	.00114	"	gold, or	.0049	"	1 47
						$5 95
3. Refuse 1418.06 lb. containing	1.25	per cent.	lead, or	17.72	lb., or	$1 06
	.0116	"	silver, or	.1645	"	2 63
						$3 69
Total, ...						13 87

The ore itself was valued for lead and silver, but not for gold, with this result:

1 ton contained	5.23	per cent.	lead, 104.6 lb., . .	$6 28
	.02	per cent.	silver, .4 " . .	6 42
				$12 70

The values of the above products would be:

1 ton smelting ore, .	89.4	per cent.	lead, 788 lb.	$47 28	
	.07	"	silver, 20.41 oz.	28 47	
	.0024	"	gold, .6998 oz.	14 42	
					$85 17
1 ton middle-grade ore,	9.11	per cent.	lead, 182 lbs.	$10 92	
	.031	"	silver, 9.039 oz.	9 94	
	.00114	"	gold, .3324 "	6 85	
					$26 49
1 ton refuse . . .	1.25	per cent.	lead, 25 lb.	$1 50	
	.0116	"	silver, 3.382 oz.	3 72	
					$5 22

A lot of lead ore, composed chiefly of galena with a little pyrite, blende, quartz, and feldspar, from ore of the veins crossed by the Burleigh tunnel of Georgetown, Colorado, was roasted, agglomerated smelted, refined, and cupelled. It gave the following results:

Ore, ...	1100 lb. @	67.37 per cent.	lead, 675.07 lb.
		.095 "	silver, 15 24 oz.
After roasting and agglomerating,	996½ lb. @	60.68 per cent.	lead, 604.52 lb.
		.086 "	silver, 12.48 oz.
After smelting and refining to soft lead,	429.75 lb. @	98.95 per cent.	lead, 425 24 lb.
		1.97 "	silver, 12.33 oz.

From which it appears that the loss in roasting and agglomerating was 70.55 pounds lead and 2.76 ounces silver; smelting and refining was 179.28 pounds lead, and .15 ounce silver. This loss in silver is too little to represent the truth, as 12.33 ounces is known to be too high; the sample was taken from the tops of the pigs.

The zincing was accomplished by stirring in one per cent. of zinc with melted lead, and then casting it in ingots and sweating it. This operation was repeated three times, and each time yielded a rich argentiferous zinc dross and a poorer zinciferous lead; the actual weight of silver in each of these six products is here given:

429.75 pounds refined lead,	@ .197 per cent.	contains 12.33 ounces silver.	
1st. Argentiferous dross,	9.73 ounces silver	(a little high),	sample poor.
1st. Sweated lead, . . .	3.09 "	by assay.	
2d. Argentiferous dross,	2.895 "	(by difference).	
2d. Sweated lead, . . .	.195 "	by assay.	
3d. Argentiferous dross,	.145 "	(by difference).	
3d. Sweated lead, . .	.050 "	by assay.	

This last sweated lead contained but .001 per cent. of silver. The distilling and final cupelling were not as successful as the rest, as from breaking of the cupel and other mishaps only 9.73 ounces of pure silver were obtained.

A copper ore from Sante Fe was worked by a student who was preparing himself to go to the mine. His main object was to experiment on slag, to find out a suitable composition that would yield soft, clean copper in the blast furnace.

The ore was composed of malachite, chryscolla, cuprite, atacamite, with a very large quantity of grossularite (lime garnet), and also quartz, calcite, and a little pyrolusite. Its chemical composition is given in the table below.

The run was divided into halves; after the first was through, the furnace was run out and then charged up again with a new mixture. During the first run the slag was planned to carry a high per cent. of iron, during the second run it was planned for a high per cent. of lime.

The results are as follows:

		First-run slags.		Second-run slags.	
	Ore.	As planned.	As obtained.	As planned.	As obtained.
SiO_2, . . .	38.40	40	46 07	46.	49.90
Al_2O_3, . . .	14.95	16	20 92	17.5	10.53
Fe_2O_3, . . .	13.11	. .	. . . .	. . . .	. . . .
FeO,		34	16.65	15.	14 17
CaO, . . .	10.68	10	7.01	21.05	20.61
MgO, . . .	trace	. .	trace	. . . .	.20
MnO, . . .	.80	. .	2.35	. . . .	.43
Cu, ...	12.32	. .	1.28	. . . .	1.55
H_2O & CO_2, etc. undetermined.					

It will be noticed at once in the first-run slag as obtained a monstrous deficiency in FeO. This will be accounted for by the pig copper from this run, which contained 18 per cent. iron.

The second run was much more nearly adjusted to suit the furnace reactions, as is shown by the slag, which is not very far from the plan, and also by the copper, which was soft and malleable, and contained but .3 per cent. iron.

AN EDGESTONE CRUSHER FOR ANALYTICAL SAMPLES.

BY ROBERT H. RICHARDS, PROFESSOR OF MINING, MASSACHUSETTS INSTITUTE OF TECHNOLOGY, BOSTON.

(Read at the Amenia Meeting, October, 1877.)

DURING the summer of 1870, I had an opportunity to visit the laboratory of the late David Forbes, Esq., in London, and was much interested in a labor-saving device which he had attached to his agate mortar. The mortar was placed in the centre of a small table, and about ten inches to the right of the mortar, a post, perhaps two

feet high, was firmly fixed to the table. Hinged to the top of this post was a lever arm, extending horizontally towards the left; and at a point in this lever, which was vertically over the centre of the agate mortar, an upright rod was attached, and in the lower extremity of the rod the agate pestle was firmly inserted. The apparatus was completed by having a weight hung on the left or outer end of the lever. The pressure of this weight was multiplied by the lever and transmitted to the agate pestle through the upright, and thus saved much of the labor needed in ordinary agate mortar crushing.

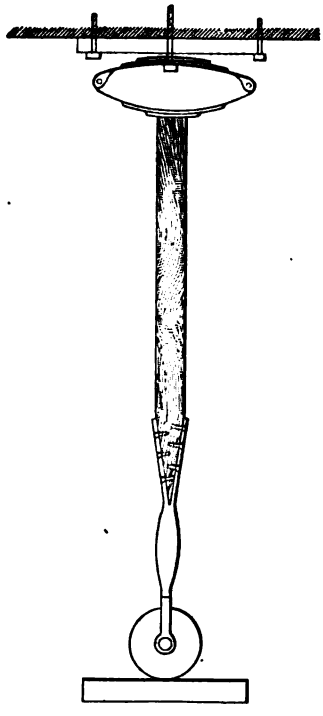

The ideas derived from this mortar in use in Mr. Forbes's laboratory, and from the use of an edgestone mill or Chilian mill for crushing ores in the mining laboratory of the Institute of Technology, have taken form in the instrument I am about to describe.

The edgestone for laboratory work consists of an agate wheel rolling upon an agate slab, and pressed down upon the latter with great force by a common elliptical carriage spring which is screwed to the ceiling. The crushing power is so great that grains of quartz 1-12 to 1-10 inch in diameter may, by rolling the wheel over them to and fro a half dozen times, be so comminuted that seventy-five per cent. of the whole will immediately pass through a 1-100″ mesh sieve. The agate plate is, in length, breadth, and thickness, 6″ × 4″ × 1″, the wheel is 3″ in diameter, and 1″ thick, and revolves on a steel axle $\frac{3}{8}$″ thick.

It is mounted in a Y or fork much like that used for the front wheel of a bicycle. Above the fork, the metal is rounded and smoothed to serve as a handle. A wooden joist 2″ × 2½″ transmits the pressure of the spring to the wheel.

I cannot yet tell with certainty what the quantity of work that it is capable of doing may be, or the variety. In a single trial, a lot of quartz sand, which at the start would pass through 1-12″ mesh sieve, and mostly rest on 1-16″ mesh sieve, weighing 92 grams, was

wholly, to the last grain, put through a 1-100″ mesh sieve by me in half an hour, without assistance in sifting, etc. Were it not for the fact that it was necessary to put the last grains through the sieve, a much better record could have been made.

Upon oily substances it will probably do little work. It squeezes the oil from Indian corn, and then refuses to roll.

In regard to the contamination of the sample by silica, the observations thus far tend to show that this takes place much less here than with the grinding action of the agate mortar. In one instance some pure crystallized corundum was crushed, and the face of the plate seemed but little touched by it. It seems probable on this account that steel, for most purposes, might be used as a substitute for agate.

A steel wheel and plate complete would probably cost ready for use from $12 to $20, according to the finish. The total cost of the agate apparatus in use by me, owing to inadvertence on my part, cost very high. Its details were as follows: plate, $13; wheel, $13; machine work, $12; spring, $1; woodwork, $1—total, $40.

The advantage of grinding action over rolling for crushing minerals needs hardly to be considered in discussing the economy of this wheel as compared with the agate mortar, yet with the 25 or perhaps 50 per cent. advantage which the agate mortar may have, this sinks into insignificance when compared with the advantageous circumstances under which the wheel is placed.

NOTE UPON THE COST OF TWO BLAST FURNACES IN THE CLEVELAND DISTRICT IN ENGLAND.

BY P. BARNES, PLAINFIELD, NEW JERSEY.

(Read at the Wilkes-Barre Meeting, May, 1877.)

In vol. 33 of the *Proceedings of the Institution of Civil Engineers*, London (part 2, for 1870-71), may be found a statement of the cost of two blast furnaces, together with a somewhat detailed description.

The attempt will be made in this note to restate these items of cost, so that the information may be rendered perhaps more accessible to our members than in its present place of record, and also in order that the items may be more intelligibly compared among themselves, or with similar items in other cases.

The leading dimensions, etc., of these furnaces are as follows:

Diameter of bosh,	13 feet.
" hearth,	8 "
" bell,	13 "
Height to platform,	85 "
Capacity,	30,085 cubic feet.
Product per week,	500 tons.
Average consumption of coke per ton,	20.35 cwt.

Cost of Furnace Plant.

Each item is given in a fraction of the total cost.

Two furnace stacks,	.18672	Hot-blast main,	.02128
Furnace gallery,	.01523	Gas down-comer and flues,	.03060
" hoist,	.01727	Chimney,	.00886
Hoist engine and house,	.01921	Force pump and all pipes,	.03534
Kiln gantry,	.04175	Floor plates and paving,	.01031
Kiln drop, for empty cars,	.01409	2 locomotives,	.03107
Bunkers,	.03348	18 metal buggies,	.00926
Kiln lift, for loaded cars,	.03968	30 slag buggies,	.01301
5 calcining kilns,	.07683	20 charging buggies,	.00160
18 hot-blast stoves,	.11079	1 scale,	.00053
8 boilers with fittings,	.09110	1½ miles railway,	.05390
2 pair blowing-engines,	.08397		
Engine-house and tank,	.04383	Unit footing,	1.00000
Cold-blast main,	.01029		

Total cost of two furnaces and fixtures in money, £56,331

Cost of Furnace Stacks.

Concrete foundation,	.0044	Boilermaker's labor,	.0612
Red brick foundation,	.0496	Bell and hopper,	.0551
" pig bed,	.0181	12 stack columns,	.0496
Fire-brick foundation,	.0217	Belly pipe,	.0102
Fire-blocks for hearth,	.1207	Slag boxes,	.0418
" " lining,	.1004	Water boshes,	.0021
Stone curb,	.0241	Sundry castings,	.0583
Lime, etc., pig bed,	.0026	Pipes and fittings,	.0068
" furnace foundation,	.0101	Coping plates to pig bed,	.0051
Fire clay,	.0118	Stores and tools,	.0118
Coal used in building,	.0066	Wages,	.0376
Brickwork in pig bed,	.0072		
" " furnace,	.1270	Unit footing,	1.0000
Wrought-iron shell and rivets,	.1561		

Total cost in money of two furnace stacks, £10,517

Cost of Calcining Kilns.

Excavating,	.0057	Cone at base,	.0577
Slag wall,	.0462	Wrought-iron shell,	.2032
Red brick,	.0600	Boilermaker's work,	.0808
Fire-blocks,	.1131	Stores and tools,	.0092
Fire-clay,	.0057	Wages,	.0300
Lime and sand,	.0404		
Brickwork,	.0554	Unit footing,	1.0000
Castings,	.2926		

Total cost in money of five calcining kilns, £4,326

Cost of Boilers.

Excavation,	.0066	Safety valves,	.0148
Slag wall,	.0128	Sludge valves,	.0062
Red brick,	.0356	Lagging, cement, etc.,	.0196
Fire-brick,	.1406	Sundry castings,	.0931
Lime and sand,	.0148	Stores and tools,	.0403
Fire-clay,	.0107	Wages,	.1284
Brickwork,	.0639		
8 boilers,	.3620	Unit footing,	1.0000
Mountings,	.0506		

Total cost in money of eight boilers, £5,132

Cost of Hot-Blast Stoves.

Excavating,	.0025	Valves,	.0040
Concrete, etc.,	.0109	Valves, 36 in. x 12 in.,	.0317
Red brick,	.0990	Valves, 18 in. x 18 in.,	.0230
Fire-brick,	.0719	Wrought-iron chimneys,	.0145
Lime, etc.,	.0262	Wrought-iron ladders,	.0009
Fire-clay,	.0054	Sundry castings,	.0456
Stonework,	.0011	Stores and tools,	.0198
Brickwork,	.0862	Wages,	.0633
Iron borings,	.0032		
Stove-pipes, 628 tons,	.4667	Unit footing,	1.0000
Stove-pipes, erecting,	.0241		

Total cost in money of eighteen stoves, £6,241

Cost of Chimney.

Excavation,	.0160	Lime and sand,	.1162
Concrete,	.0200	Brickwork,	.3006
Red brick,	.5272		
Fire-brick,	.0200		1.0000

Cost in money, £499

NOTE UPON THE COST OF SIX REGENERATIVE FURNACES,

BUILT IN 1875 AT THE EDGAR THOMSON STEEL WORKS, NEAR PITTSBURGH, FOR HEATING STEEL INGOTS AND BLOOMS.

BY P. BARNES, PLAINFIELD, NEW JERSEY.

(Read at the Wilkes-Barre Meeting, May, 1877.)

THESE furnaces are of the ordinary Siemens type, and present no special peculiarities of construction. The bed of each is 8 feet by 20 feet clear inside of the walls and ports. The producers are placed at a distance of about 200 feet from the furnaces, and the gas is collected in an iron tube and led across the yard overhead. It then drops underground into the gas flue, and is distributed to the furnaces. A considerable weight of floor-plates over the valve-pits is included in account 39, but none of the general stock of floor-plates for the mill were charged to the furnaces.

In Table No. 1 is shown the money cost of the furnaces as distributed to the several accounts named.

In Table 2 is shown the proportion of each account due to each of the several items or classes of expenditure named.

TABLE No. I.

Account.	Class.	Money.	Per cent.
35	Producer, brickwork.	$8,087	.112
36	" castings.	9,996	.138
37	Gas flue.	4,777	.066
38	Furnace, brickwork.	29,705	.414
39	" castings.	19,472	.270
		$72,037	1.000

It is thus rendered possible, almost at a glance, to determine the money value in this particular case of each of the items named. The regular work of three of these furnaces in heating steel blooms for the months of January and February, 1877, was 77 rounds per week of 60 blooms each, or 4620 30-foot rails per week. Each furnace will heat 8 14-inch ingots, for three rails each, at one time.

TABLE No. II.

Item.	Class.	Accounts.				
		35	36	37	38	39
1	Lime,	.026	...	...	.0134	...
2	Sand,	.026	...	.048	.0155	...
3	Cement,	.030	...	.149	.0134	...
4	Concrete,	.106	...	.084	.1006	...
5	Red brick,	.123	.005	.254	.0452	...
6	Fire-brick and clay,	.370	...	...	.4985	...
7	Bricklaying,	.213	...	.166	.1532	...
8	Skilled labor,	.041	.037	.043	.0754	.0261
9	Common labor,	.037	.047	.048	.0422	.0627
10	Teams,	.028	.009	.077	.0400	...
11	Bar iron,	...	.069	...	...	.0239
12	Castings,	...	.312	.094	...	.5654
13	Plate iron,	...	.007	.036	...	.1177
14	Cooling tubes,	...	.430	...	...	...
15	Iron beams,	...	.046	...	...	.0103
16	Reversing valves,	...	...	...	...	.1866
17	Charging hoppers,	...	.025	...	...	...
18	Lumber,	...	.013	.001	.0026	...
19	Hardware,	...	...	...	...	.0073
		1.000	1.000	1.000	1.0000	1.0000

NOTE UPON THE COST OF IRON RAILS

AS MADE IN 1866, IN A LEADING ENGLISH RAILWAY COMPANY'S ROLLING MILL.

BY P. BARNES, PLAINFIELD, NEW JERSEY.

(Read at the Wilkes-Barre Meeting, May, 1877.)

THE tabular statement accompanying this note shows the money cost in each of the three departments of manufacture, of 17 leading items, and also the proportion (expressed in a decimal fraction) which each of these items bears to the total cost.

The statement can hardly be taken for more than an average illustration of the clear showing of ratios and of results which may be made by such an arrangement, for not only will these items vary from month to month in any given works, but the methods themselves of manufacture differ widely in different works.

It is obvious that such a statement, however useful it may be, must be submitted with but exceedingly little explanation or discussion, or with none at all, for the reason that to enter at any satisfac-

tory length upon the merits of the case would require a paper far exceeding the limit of this note:

COST OF ENGLISH IRON RAILS, 1866.

Item.	Classification.	Puddling Forge.		Blooming Forge.		Rail Mill.		Item.
		Money cost, £ sterling.	Fraction.	Money cost, £ sterling.	Fraction.	Money cost, £ sterling.	Fraction.	
1	Coal,	326	.095	255	.053	289	.028	1
2	Pig Iron,	1,460	.427	...	...	...	...	2
3	Scrap Iron,	473	.135	78	.016	70	.007	3
4	Old castings,	66	.019	...	...	...	...	4
5	Turnings,	249	.073	...	...	...	...	5
6	Puddled bars,	...	...	...	...	3,515	.349	6
7	Old rails,	...	...	3,591	.754	486	.048	7
8	Cobbles, etc.,	...	...	140	.029	...	...	8
9	Scrap from blooms,	125	.036	...	...	...	...	9
10	Blooms,	...	...	...	...	4,634	.462	10
11	Labor,	440	.128	545	.114	742	.073	11
12	Fire-brick and clay,	45	.013	15	.003	8	.001	12
13	Castings and bar iron,	132	.038	...	...	...	...	13
14	Repairs,	48	.014	30	.006	72	.007	14
15	Stores,	23	.007	26	.005	92	.009	15
16	Interest on capital,	25	.007	75	.016	100	.010	16
17	General expenses,	17	.005	17	.004	65	.006	17
18	Total footing,	3,429	...	4,772	...	10,073	...	18
19	Unit footing,	...	1.000	...	1.000	...	1.000	19
20	Credit deduction,	...	...	136	...	837	...	20
21	Total cost, £ sterling,	3,429	...	4,636	...	9,236	...	21
22	Product, 4 weeks, tons,	...	5.90	...	1.009	...	1.401	22
23	Cost per ton, £ sterling,	...	5.81	...	4.59	...	6.59	23
24	Cost per ton, American gold ($4.84),	...	28.12	...	22.21	...	31.89	24

MEMORANDUM RELATING TO THE BOILER ACCOUNT

AS KEPT DURING THE CONSTRUCTION OF THE EDGAR THOMSON STEEL WORKS, PITTSBURGH, PA.

BY P. BARNES, PLAINFIELD, NEW JERSEY.

(Read at the Amenia Meeting, October, 1877.)

THE subdivisions of this account are numbered 27, 28, 29, 30, 31, 32, and 33, in the general series of construction accounts, and give the details of cost of the various items of the work, as noted below:

Accounts 32 and 33 relate to hand-tools and to heaters, and, being quite small in total amount, are omitted in this statement.

The accounts were all as minutely subdivided as possible, and they show simply the sums of money paid for the materials or for the labor involved, the items being taken by permission from the original vouchers filed in the office of the company.

All items less than $5, and all sums paid for freight, are omitted in making up the abstract, so that, while it does not show with absolute minuteness the details of cost, yet it may serve a useful technical or professional purpose as a basis for comparison with similar details of work executed elsewhere.

It may be needful to say, by way of brief explanation, that the boiler-house referred to is 46 feet wide by 180 feet long, and affords room for 20 boilers, of which 16 were erected, and are included in the statement of cost.

Each boiler is 5 feet diameter and 15 feet long, and had 40 4½-inch tubes. Six tubes have since been removed from each boiler.

The boilers are set in plain brick walls, the usual grate being placed beneath one end, and the gases return through the tubes and escape through a 75-foot iron chimney set in front of each boiler.

The item shown in account 31, for pipes and fittings, comprises all the material and labor expended for that purpose for conveying steam or water throughout the entire establishment. The "common pipe" comprises medium and small sizes, the "large pipe" simply large sizes of *rolled* pipe, while the "sheet-iron pipe" includes all riveted work made from sheet or plate iron. The hydraulic pipe is all of special thickness, for cranes and other special machinery using hydraulic pressure.

A copy of the list of accounts is appended to this paper for convenient reference.

Class.	House.	Shells, etc.	Brickwork.	Castings.	Pipes.
	27	28	29	30	31
Rubble work,	$3,910	$132	$562	....	....
Cement,	54	10	75	....	....
Sand,	25	....	54	....	....
Lime,	....	....	18	....	....
Water,	133	....	....	....	....
Red brick,	1,160	....	86	....	....
Fire brick and clay,	....	....	3,286	....	....
Bricklaying,	580	11	1,401	....	....
Lumber,	579	....	166	....	....
Window frames,	489	....	....	....	....
Roof iron,	4,136	....	....	....	....
Shells and domes,	....	23,482	....	....	....
Tubes,	....	9,333	....	....	....
Wrought beams,	....	878	....	....	....
Chimneys,	....	7,384	....	....	....
Castings,	235	413	....	$3,811	$858
Bar iron,	93	126	....	82	88
Hardware,	....	89	56	97	458
Lead,	....	....	....	....	255
Sulphur,	12	....	....	....	51
Coal,	12	49	21	....	78
Oil,	....	41	....	....	45
Paint,	52	117	....	13	10
Common pipe,	....	....	....	....	6,815
Large pipe,	....	....	....	....	4,812
Hydraulic pipe,	....	....	....	....	1,636
Sheet-iron pipe,	....	....	....	....	5,353
Copper works,	....	....	....	....	873
Steam valves,	....	....	....	....	650
Rubber,	....	....	....	....	290
Common labor,	126	472	55	134	942
Skilled labor,	318	2,271	643	348	3,402
Teaming,	....	208	150	....	....
Totals,	$11,914	$45,016	$6,573	$4,485	$26,616

Total of five accounts noted, $94,604.

A. CONVERTING WORKS.

1. *Building.* — Foundations; brickwork; timber and bolts in walls; roof; ovens and tracks; cupola piers; spiegel-furnace piers; casting-pit walls and iron coping; iron columns behind converters; window frames; hinge irons.

2. *Blowing Engines.*—Foundations; bolts and washers; air receiver.

3. *Pressure Pumps.*—Foundations; bolts and washers; accumulator; regulator with valves and platform.

4. *Cupola Blowing Engine.*—Foundations; bolts and washers.

5. *Cupola Furnaces.*—Bed-plates; stacks; brick lining; spouts for leading metal with their wheels and hangers; cupola ladles and scales.

6. *Converters.*—Foundations; bottoms; tuyere boxes; bottom cars and lift; rotating gear; stacks; stack lining.

7. *Cranes.*—Foundations; bolts and washers; top guides; ladles; stoppers; oven crane.

8. *Cupola Lifts.*—Foundations; frame; hydraulic cylinders; chains; valves; buggies for iron and coal.

9. *Floor and Galleries.*—At cupola base; at cupola charging doors; behind converters; brick paving; bins and shelves for materials.

10. *Smaller Machines and Fixtures.*—Crusher; pulverizer; grinding rolls; pug mill; cinder mill; shafting, couplings, and pulleys; shaft-hangers and wall-plates; belt; engine and fly-wheel; fan for spiegel furnace.

11. *Spiegel Furnace.*—Plates; brick lining; iron stack; damper.

12. *Lift for Melted Iron.*—Foundation; frame; cylinder and ram; car; valve.

13. *Sheet-iron Pipes and Valves.*—To regulator from receiver; to converters; to cupolas; to spiegel furnace.

14. *Hand Tools.*—For converters; for ladles; for cupolas; for engines; for cranes; for spiegel furnaces; for crushing apparatus; for bottom casting.

B. RAIL MILL.

15. *Building.*—Foundation for columns; base plates and setting; iron columns; roof.

16. *Engine and Roll-Train Foundations.*—Masonry; bolts and washers.

17. *Large Engines.*

18. *Blooming Train.*—Tables; regulator; belts; floor over pits.

19. *Rail Train.*

20. *Smaller Engines and Fixtures.*—Foundations; engine for punch, etc.; drills; presses; saws with engine and carriage; shafting; belts; rollers for transfer of rails.

21. *Hot Bed.*—Cold bed; strait plate; rollers from train.

22. *Hammer.*—Foundation; bolts and washers.

23. *Cranes.*—At bloom mill; to pile blooms; to change rolls; traveller in yard.

24. *Hand Tools.*—Wrenches; tongs; hooks at rolls and hammer, with runs and hangers; at drills; at press; at punch; sledges; telegraphs with tongs; buggies.

25. *Track Scales.*—Foundation.

26. *Floor Plates.*

C. BOILERS.

27. *Building.*—Foundation; timber and bolts in walls; window frames; roofs.

28. *Boilers.*—Stacks and bearers.

29. *Boiler Setting.*—Foundation; fire-brick work; red-brick work.

30. *Castings.*—Binders and bolts; grates and frames; floor plates; ash and flue doors; rollers and plates.

31. *Pipes.*—Main steam pipe; safety valves; stop valves of all kinds (except those furnished by contract with engine); all pipes for steam or water, whether of cast or wrought iron; hangers; bolts; covering for pipes.

32. *Tools.*—Pokers; hoes; bars; steam gauges; gauge cocks; gauge glasses.

33. *Feed Pumps and Heaters.*—Foundations.

D. FURNACES.

34. *Producer House.*—Foundation; brickwork; iron columns; roof.

35. *Producers.*—Foundation; red-brick work; fire-brick work.

36. *Castings for Producers.*—Binders and bolts; plates; hoppers; cooling tubes; grates.

37. *Gas Flue.*—Foundation; brickwork; man-hole plates.

38. *Furnaces.*—Foundation; red-brick work; fire-brick work.

39. *Castings for Furnaces.*—Binders and bolts; plates; flooring; valves; doors; bottom plates and bearers.

40. *Tools.*—Bars; hoes; hooks; short peels.

41. *Charging Machinery.*—Cylinders; valves; chains; sheaves; framing at furnaces; long peels.

42. *Chimneys.*—Foundations; base plates; bolts; bolts and washers; iron shells; brick lining.

E. BUILDING FOR OFFICES AND SHOPS.

43. *Building.*—Foundation; brick walls; roof; window frames; floor; vault with doors.

44. *Office.*—Fixtures; furniture.

45. *Laboratory.*—Chemicals; balances; fixtures; furniture.

46. *Store Room.*—Fittings.

47. *Machine Shop.*—Engine; boiler and fittings; machine tools; hand tools; vises; shafting and couplings; belts.

48. *Smith Shop.*—Forges; anvils; steam hammer; tools.
49. *Oil House.*—Oil tanks.

F. WATER WORKS.

50. *Building.*—Foundations; boilers; pumps; pipes to river and to works; tank.

G. ROLLING STOCK.

51. *Locomotives.*—Ingot cars; bloom cars; dump cars; yard wagons and carts.

H. RAILROADS.

52. *Grading.*—Wide-gauge railroad trestles and tracks; narrow-gauge railroad tracks; coal shoots.

I. SEWERS.

53. *Excavations.*—Brickwork; pipe supports.

K. SHEDS FOR MATERIALS.

54. *Sheds for Brick.*—Lime; cement; clay; sand; coke; coal and iron at smith shop.

L. RIGGING.

55. *Pulleys.*—Ropes; derricks.

M. DROP.

56. *Frame.*—Engine.

N. GENERAL EXPENSES.

57. *Mechanical Engineering.*—Draughtsmen; office expenses; paper; instruments, etc.
58. *Civil Engineering.*—Draughtsmen; office expenses; paper; instruments, etc.
59. *Accounts at Works.*—Clerks; office expenses; books; blanks; stationary, etc.
60. *Accounts at General Office.*—Bookkeeper; clerks; books; blanks; stationery; office expenses, etc.
61. *General Office.*—Furniture; rent; incidental expenses.
62. Watchman.

O. LEVELLING, ETC.

63. Grading premises, etc.

MISSING ORES OF IRON.

BY PERSIFOR FRAZER, JR., PHILADELPHIA.

(Read at the Amenia Meeting, October, 1877.)

IT has been the aim of the writer, by measuring his base line on the territory of theoretical chemistry, to attempt to fix by triangulation certain points within the domain of mineralogy.

As the barest first experiment in this direction, a few of the hydrated oxides of iron have been selected, their theoretical construction reduced to percentage of the constituents into which the ordinary analytical methods would resolve them, and the results compared with actual analyses compiled from the most reliable sources; the accidental errors being as much as possible eliminated. This method seems to be a simple one and one easily pursued, but, as will shortly appear, it is beset with grave difficulties, all of which the writer does not pretend to have satisfactorily surmounted.

In the first place arises the important question, what are we to understand by the *hydrated* oxides of iron?

In all books of chemistry and lexicons of minerals, the proposition, long ago taught by the earlier chemists, that water might exist in two forms of combination, viz., as water of *crystallization* or as water of *constitution*, is tacitly assumed.

There is nothing in the principles of the new chemistry which is opposed to this; for (to carry the mind's eye into the process of construction of the least units into which a definite chemical compound is capable of being divided without losing its characteristic properties), however unlikely it may seem, it is, nevertheless, possible that a given molecule of iron may, under certain conditions of heat, pressure, etc., attract to itself as many molecules of the water in which it is natant as from the relative size, shape, attractive force, etc. of either, it is capable of taking up, and this complex system of associated molecules *might* oscillate as a physical unit so long as the conditions on which its existence was dependent remained unchanged. Moreover, it is highly probable that the first effect upon such a molecule produced by physical or chemical forces would be to separate it into two or more simple ones of different kinds, while a further application of these forces might rend asunder the bonds of the simpler compounds themselves.

All this is possible; and, to go a step further, it is possible that in a solution containing di-antimony-ter-sulphide,*

$$[S'' = Sb''' - S'' - Sb''' = S''],$$

and silver sulphide

$$[Ag' - S'' - Ag'],$$

these two independent molecules swimming in the same menstruum may have such an attraction for each other as to pair together, wherever this is possible, and compound another and more complex (physical) molecule, as represented in the formula of the elder Dana for pyrargyrite. This is possible, provided the conditions are such that no more and no fewer molecules of the one can be retained by the other. But is it likely?

It is not claimed that any unanswerable arguments will be presented here against the existence of molecular affinities, for the object of the paper is a very different and much narrower one. It may be stated, however, that after admitting all the above as possible, a further demand is made on our credulity in the presentation of other compound molecules, consisting of three smaller molecules. Take, for instance, the formula in J. D. Dana's *System of Mineralogy* for chalcopyrite: $Cu_2S+FeS+FeS_2$. Belief in the existence of such a compound physical molecule transcends the power of a not too credulous mind. Suppose, again, that we had a menstruum capable of carrying any given number of molecules. In the first place, is it probable that FeS and FeS_2 could exist side by side without forming some of those "mixtures" of FeS and FeS_2 referred to by Prof. Dana under pyrrhotite?

But independently of this objection, how are we to conceive of three separated but saturated molecules so arranging themselves together as to form a complex molecule in which there shall be just one of each of the smaller molecules represented? The graphic statement of this condition of affairs would be as follows:

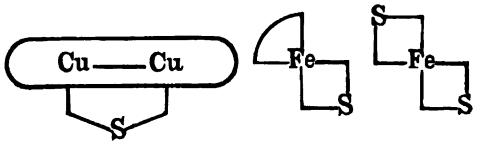

Or $(Cu_2)'' = S'' * * * Fe'' = S'' * * * Fe''''S_2''$.

To suppose that the *molecular attractions* would enable the count-

less millions of these little molecules floating (or natant) in a solvent to select just one of each for the new compound molecule, would require us also to conceive that either the three molecules were like the three parts of a Chinese puzzle in shape, inasmuch as only one of each would dovetail into the others, and thus form the complete unit, capable of withstanding the motions impressed upon it as an integer of the mineral; or else that the *valences*, or atom-saturating powers, of the atoms constituting the original constituent molecules were changed so as to offer reciprocal bonds to weld the three into one. About the former supposition nothing shall be said except this, that owing to the attacks of the strict constructionists upon those who wish to allow a certain play to the scientific imagination in the interpretation of chemical laws, the latter have been completely cowed: nevertheless, although the chemical conservatives are beating a mass of horsehair when they charge any sane person with wishing to *represent the actual shape* of any molecule by the affinity lines drawn on paper, *there must be such a shape;* and although the conclusion is not inevitably true, it is nevertheless extremely probable, as Prof. Tyndall suggests in the case of the bar magnet, that, could we subdivide down to the individual molecule, we would find that molecule polarized and exhibiting at opposite extremities the electric forces of opposite signs observed in the polar parts of the magnet. And to apply to this Regnault's* ingenious hypothesis as to the production of all forms in a crystallographic system by modes of axial increment of one of those forms, it becomes exceedingly likely that the molecule of a mineral is a geometrical solid representing one (or more) of the forms of the system in which the mineral crystallizes.

If this be so, we may well ask of Regnault what combination of crystals of (Cu_2S) (chalcocite, crystallizing *ortho-rhombic*); ferrous sulphide (FeS), known in nature as troilite, and either *massive* (Dana), or *hexagonal* (Otto); and pyrite (FeS_2, *isometric*) could produce chalcopyrite (*tetragonal*), which includes all the constituents in the proportion existing in the sum of the three.

As to the second supposition, viz., that in presence of each other the *valences* of the elements constituting these supposititious compounds change so as to offer each other, reciprocally, bonds of union to unite the whole into one mass, it leads inevitably to the theory of the composition of minerals, which has been more and more forced upon the

* Translation by Betton. Edited by Booth and Faber. Philadelphia, 1852.

writer's conviction, and to which he endeavored to give expression four years ago in the formulas calculated for the "Tables of Minerals;" and the only question he would raise in regard to such explanation is this: How do we know that such compounds were ever present at all?

What the change of *valence* would lead to is easily shown:

$$Cu_2S+FeS+FeS_2 = Cu_2Fe_2S_4 = CuFeS_2.*$$

This may be expressed by the rational formula published in the "Tables" by the writer in 1874: $(Cu_2)'' = S_2'' = (Fe_2)^{vi}S_2'')''$.†

Leaving, then, the consideration of the theory (now less generally accepted than formerly) of the contemporaneous existence of different compounds as integers of the same mineral species; the application of this to the first-stated difficulty is sufficiently natural. What is true of any other compound may be suspected of hydrogen oxide, and what applies to the molecular attractions of separate compounds swimming in water may be applied to the water itself.

It is true that the picking up of molecules of water by any particular molecule of a mineral, as a magnetized steel picks up iron filings, is more likely than the selection of one kind of molecule by another when many kinds are present; but it will be admitted that, if a consistent hypothesis can be stated which does not require the admission of two kinds of combination, this hypothesis is entitled, on the ground of its greater simplicity, at least to respectful attention.

It will appear in studying the hydroxidized iron minerals, that such an hypothesis may be found in one which abandons water of crystallization altogether. It is true that if one heats Limonite or Göthite, water vapor will be expelled and the final result will be red oxide of iron; but this no more proves that the oxide formed one molecule and that the water molecule was linked to it, than the production of carbonic oxide from formic acid by the extraction of a molecule of water proves that the water, as such, existed in combination with the oxide. Without attempting to dogmatize as to whether

* This latter form is the one adopted in the "Textbook of Mineralogy, by Edward Salisbury Dana, on the plan and with the coöperation of James D. Dana. It is proper also to add that the first and other formulas of the older have been entirely omitted in the newer work.

† The writer prefers to keep the *valence* marks appended to each symbol, as in the formulas in the "Tables," because they show the manner of reducing the valence of the basic or acidic radical by the addition of one or more *saturating* atoms.

Chemical Name.	..of Actual Analysis. H_2O	Impurities, loss, etc.	Fe_2O_3	H_2O	Name of analyst and sum of actual analysis.	
A—MONATOMIC.						
I.—Ortho-Ferric-Hydrate (?)	.74	P_2O_5, Humic Acid 8.02	69.85	30.15	Hermann,	100.00
II.—Ferric-Mono-Meta-Hydrate						
III.—Ferric-Anhydride (?)						
B—DIATOMIC.						
I.—Di-Ferric-Ortho-Hydrate	.40	H. A. loss 1.87	75.14	24.86	Ullmann,	98.75
	.14	H. A, SiO_2 & Sand 19.77	73.66	26.34	Hunt,	100.00
II.—Di-Ferric-Mono-Meta-Hyd	.96	SiO_2, C, and loss 0.63	81.93	18.07	Murray,	100.00
III.—Di-Ferric-Di-Meta-Hydrate	.47		90.53	9.47	Kobell,	100.00
	.75	1.00	89.17	10.83	Brandes,	99.75
	.07	0.28	89.91	10.09	Yorke,	100.06
IV.—Di-Ferric-Anhydride						
C—TRIATOMIC.						
I.—Tri-Ferric-Ortho-Hydrate	.43	SiO_2, P_2O_5 and loss 2.42	79.07	20.93		
		Insol., CaO, MgO SO_3, P_2O_5			Haughton,	99.48
II.—Tri-Ferric-Mono-Meta-Hyd	.39	20.77 SiO_2 and loss	85.63	14.37	Ford,	100.166
	.00	3.50	83.42	16.58	Ullmann,	98.75
	.07	0.28	89.91	10.09	Yorke,	100.06
III.—Tri-Ferric-Di-Meta-Hydrat	.68	3.08	88.98	11.02	Kobell,	100.00
	.80	2 88	88.89	11.12	Kobell,	100.00
IV.—Tri-Ferric-Tri-Meta-Hydra	.61	Insol. and SO_3 1.9	95.31	4.69	Fritsche,	100.10
V.—Tri-Ferric-Anhydride						
D—TETRATOMIC.						
I.—Tetra-Ferric-Ortho-Hydra	.39	Al_2O_3 and SiO_2 14.61	80.90	19.10	Hausmann,	99.84
(If determined as (Fe_2O_3)		SiO_2, P_2O_5 and loss 2.42	79.07	20.93	Haughton,	99.48
the excess over 100 should	.4	SiO_2, C and loss 0.63	81.93	18.07	Murray,	100.00
If as $Fe_2O_3+(H_2O)_2$, loss 0.5	.96	SiO_2 and P_2O_5 20.77	85.63	14.37	Ford,	100.166
II.—Tetra-Ferric-Mono-Meta-H	.39	SiO_2 and loss 3.50	83.42	16.58	Ullmann,	98.75
(If determined as $Fe_2O_3+($		Al_2O_3 and SiO_2 7.55	88.06	16.94	Hausmann,	96.28
excess over 100 should be 3	.00	4.61	85.55	14.45	Hoffman,	100.15
as $(Fe_2O_3)_2+(H_2O)_3$, loss 0.5	.67	21.00	85.89	14.11	McCreath,	99.88
	.81	1.00	89.17	10.83	Brandes,	99.75
	.01	0.28	89.91	10.09	Yorke,	100.06
III.—Tetra-Ferric-Di-Meta-Hyd	.75	.....	86.77	13.23	Amelung,	100.00
(If determined as $(Fe_2O_3$	.07	17.68	86.62	13 38	McCreath,	99.71
the excess over 100 should	.23	15.02	86.80	13 20	McCreath,	100.24
If as $Fe_2O_3+H_2O$, loss 0.56	.02	3.08	88.98	11.02	Kobell,	100.00
	1.10	2.88	88.89	11.12	Kobell,	100.00
	0.68					
	0.80					
IV.—Tetra-Ferric-Tri-Meta-Hyd						
(If determined as $Fe_2O_3+($						
excess over 100 should be 4						
as $(Fe_2O_3)_2+H_2O$, loss 0.5						
V.—Tetra-Ferric-Tetra-Meta-H						
(If determined as $(Fe_2O_3)_2$						
excess over 100 should be						
as Fe_2O_3, loss 0.61 p.)						
VI.—Tetra-Ferric-Anhydride						

* The small figures *after* th and their iron were considered as all in the form of Fe_2O_3, it would lead to the excesses given, s these tables to Fe_2O_3. 1.5 × free alumina is reckoned to the Fe_2O_3.

| H.A.—Humic Acid.

compounds of oxides and water do exist in nature, it suffices here that all hydrates of iron can be calculated on the assumption that all the water is "basic," *i. e.*, exists as hydroxyl in the compound. The appended tables are thus computed.

Another kind of difficulty which presents itself in the course of such a study, is the accidental mineral impurity of the specimen from which the analysis has been made. This amount of impurity, to which in the table a special column has been given, varies, as will be seen, from a small fraction of 1 per cent. to over 21 per cent. When the amount is over 3 or 4 per cent., the analysis becomes an unfit one from which to calculate results; more especially if the impurity stands in the analyses by the percentages of its constituents and not separated as it exists and called "sand," etc.

In the cases below, where this impurity has been a notable factor of the analysis, its electro-positive and electro-negative (or, shortly, its anion and cathion) elements have been reduced to chemical units, and if they did not very nearly (within the error of observation) balance each other, the surplus of either has been added to its proper side in the general analysis; but this is an operation too dependent upon the judgment of the calculator to be considered satisfactory.

When the impurities are noticed to be high, therefore, the reader will please remember that the accuracy of the computed theoretical composition is very questionable.

All others than the diatomic series of iron hydrates have been inserted simply for the sake of the symmetry of the hypothesis and without any direct proof of their actual existence.

Still there are facts which may be interpreted as favorable to the theory of their existence.

First, as to the monatomic compounds. It has been observed not only that different chemists note different impurities, but that certain chemists have pet impurities, which they find so universally distributed that one might be tempted to suppose their methods of analysis as delicate as the spectroscope for sodium.

We all can recall such instances. Among these are naturally some who, whenever they have to deal with an iron analysis pursue the Fairy Manganese, whose bright lines haunt them still. Now it is a fact that many iron ores are associated with more or less manganiferous species; but it is also probable that much has been called manganiferous which is not really so. And this might easily occur, at least where this metal has not been determined directly, or is recorded as present in trace, if among the hosts of ferric oxide and

water ratios computed from the many analyses, there were some two of about Fe_2O_3,64; H_2O,31.03; and Fe_2O_3,75; H_2O,18; for these ratios might easily correspond with those that would obtain in the ortho and mono-meta hydrates of monatomic iron.

Out of some analyses, after many corrections, approximations to these figures can be got, but they are too uncertain to record. Two things should be noticed, however, and they are these:

First, these compounds, if split up into their constituents, will only form water and ferric-oxide (FeO_2), not di-ferric-anhydride or, plainly, sesquioxide (Fe_2O_3). Now the constituents of a hydrated iron ore are determined as water and sesquioxide, and if such a decomposition of the ore were effected as to produce FeO_2, this latter would itself be immediately decomposed in the presence of organic matter, hydrogen compounds, or other substances capable of being oxidized. The result would be that in the presence of hydrochloric acid free chlorine would be evolved (a circumstance often noticed with iron ores and ascribed to the presence of manganese).

Another result of such a decomposition would be that the analysis would sum up less than 100, as many of the analyses of the best chemists may be seen to do.*

Nevertheless the mineralogist and chemist are notified to look out for a possible mineral of this character, the signs by which it may be known being the *water, iron-oxide* ratios above given; a capacity to evolve free chlorine from a hydrochloric acid solution in the absence of MnO_2, and of course, therefore, a sum of constituents less than 100.

Of the diatomic series, little may be said except that its existence is amply and abundantly verified at once by the analyses themselves and by the interpretation given them by common consent.

The following list aims to present the theoretical composition of the hydrates of a few members of the imagined iron series:

Monatomic.

$(HO)_4Fe$—Ferric-Ortho-Hydrate, . . . ——
$(HO)_2FeO$—Ferric-Mono-Meta-Hydrate, . . ——

* Perfect candor requires that the writer should here state, however, that so far as his observation has gone, the analyses which most nearly approach these types have been more frequently over than under 100.

Diatomic.

$(HO)_6(Fe_2)$—Di-Ferric-Ortho-Hydrate, . .	Exists.
$(HO)_4(Fe_2O)$—Di-Ferric-Mono-Meta-Hydrate, .	Exists probably.
$(HO)_2(Fe_2O_2)$—Di-Ferric-Di-Meta-Hydrate, .	Exists.
Fe_2O_3—Di-Ferric-Anhydride, ...	Well known.

Triatomic.

$(HO)_6(Fe_3)$—Tri-Ferric-Ortho-Hydrate, . .	——
$(HO)_6(Fe_3O)$—Tri-Ferric-Mono-Meta-Hydrate, .	——
$(HO)_4(Fe_3O_2)$—Tri-Ferric-Di-Meta-Hydrate, .	——
$(HO)_2(Fe_3O_3)$—Tri-Ferric-Tri-Meta-Hydrate, .	——
Fe_3O_4—Tri-Ferric-Anhydride, ...	Well known.

Tetratomic.

$(HO)_{10}(Fe_4)$—Tetra-Ferric-Ortho-Hydrate, .	——
$(HO)_8(Fe_4O)$—Tetra-Ferric-Mono-Meta-Hydrate,	——
$(HO)_6(Fe_4O_2)$—Tetra-Ferric-Di-Meta-Hydrate, .	——
$(HO)_4(Fe_4O_3)$—Tetra-Ferric-Tri-Meta-Hydrate, .	——
$(HO)_2(Fe_4O_4)$—Tetra-Ferric-Tetra-Meta-Hydrate,	——
Fe_4O_5—Tetra-Ferric-Anhydride, . . .	——

Pentatomic.

$(HO)_{12}(Fe_5)$—Penta-Ferric-Ortho-Hydrate, .	——
$(HO)_{10}(Fe_5O)$—Penta-Ferric-Mono-Meta-Hyd'te,	——
$(HO)_8(Fe_5O_2)$—Penta-Ferric-Di-Meta-Hydrate, .	——
$(HO)_6(Fe_5O_3)$—Penta-Ferric-Tri-Meta-Hydrate, .	——
$(HO)_4(Fe_5O_4)$—Penta-Ferric-Tetra-Meta-Hyd'te,	——
$(HO)_2(Fe_5O_5)$—Penta-Ferric-Penta-Meta-Hyd'te,	——
Fe_5O_6—Penta-Ferric-Anhydride, . . .	——

Hexatomic.

$(HO)_{14}(Fe_6)$—Hexa-Ferric-Ortho-Hydrate, . .	——
$(HO)_{12}(Fe_6O)$—Hexa-Ferric-Mono-Meta-Hyd'te,	——
$(HO)_{10}(Fe_6O_2)$—Hexa-Ferric-Di-Meta-Hydrate, .	——
$(HO)_8(Fe_6O_3)$—Hexa-Ferric-Tri-Meta-Hydrate, .	——
$(HO)_6(Fe_6O_4)$—Hexa-Ferric-Tetra-Meta-Hyd'te, .	——
$(HO)_4(Fe_6O_5)$—Hexa-Ferric-Penta-Meta-Hyd'te,	——
$(HO)_2(Fe_6O_6)$—Hexa-Ferric-Hexa-Meta-Hyd'te,	——
(Fe_6O_7)—Hexa-Ferric-Anhydride, . . .	——

Heptatomic.

$(HO)_{16}(Fe_7)$—Hepta-Ferric-Ortho-Hydrate, . ——
$(HO)_{14}(Fe_7O)$—Hepta-Ferric-Mono Meta-Hydrate, ——
$(HO)_{12}(Fe_7O_2)$—Hepta-Ferric-Di-Meta-Hydrate, ——
$(HO)_{10}(Fe_7O_3)$—Hepta-Ferric-Tri-Meta-Hydrate, ——
$(HO)_8(Fe_7O_4)$—Hepta-Ferric-Tetra-Meta-Hydrate, ——
$(HO)_6(Fe_7O_5)$—Hepta-Ferric-Penta-Meta-Hydrate, ——
$(HO)_4Fe_7O_6$)—Hepta-Ferric-Hexa-Meta-Hydrate, ——
$(HO)_2(Fe_7O_7)$—Hepta-Ferric-Hepta-Meta-Hydrate, ——
Fe_7O_8—Hepta-Ferric-Anhydride, . . Analogue known.

Of course this list, without proof of the existence of the compounds expressed, is to be regarded as wholly a product of the imagination, yet it is not without aim that it has been prolonged so as to include the so-called hepta-ferric series, because in this series and its derivatives occur two compounds which, when viewed together, throw light on the modes by which molecular structure may be modified, and afford an explanation of the *solutions* of one oxide in another.

To explain this concisely, it will be necessary to employ the graphic method, which, whether liked or not by certain leading chemists, is very convenient for such purposes.

It is assumed as an hypothesis throughout this paper that the tetrad atoms of iron, like those of carbon, can unite to form homologous series.

The normal heptad molecule of iron oxide would, therefore, be thus represented:

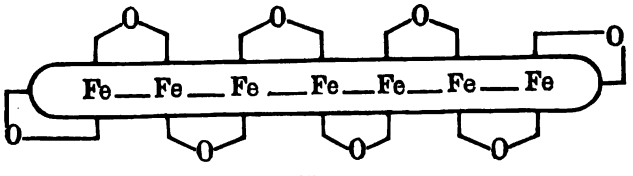

or, Fe_7O_8.

No such compound of iron and oxygen has been mentioned, but the corresponding sulphide Fe_7S_8 is the generally accepted formula for pyrrhotite, or magnetic pyrites. Dana says (his System, page 151) of magnetite, that though the normal proportion of $Fe_2O_3 : FeO$ is 1 : 1, there is occasionally a wide variation and thus a gradual passage to the sesquioxide. Two analyses by Schwalbe are adduced,

making these proportions respectively 3 : 1 and $3\frac{1}{4}$: 1 nearly. That is to say $(F_2O_3)_3$: FeO and $(Fe_2O_3)_{3.25}$: FeO.

From the former of these two proportions we obtain Fe_7O_{10} and from the other, $Fe_{30}O_{43}$.

Neglecting this latter as within those limits when the slightest alteration in the analysis would alter the numerical constitution of the molecule enormously; and, therefore, as a point determined by too small a chemical parallax, we will see how Fe_7O_{10} will take its place among the hepta-ferric derivatives.

Observation may be here directed to the instructive and significant circumstance that from the varying proportions of Fe_2O_3 and FeO, found by some of the ablest analysts in different magnetites, it would seem (true to the universal experience as to the distinctions between things, which permits us to divide objects into groups of those which possess some one quality or attribute in common, while differing among themselves in others), that the condensation of atoms in the iron oxide molecule (at least in its simpler compounds) increases its magnetic force, though it has not been proved to be in proportion to the amount of that condensation.

As stated above, the normal valence of the iron molecule of seven atoms is $2n + 2 = 16$, which amounts to the same thing as saying the least possible number of oxygen (or dyad sulphur) atoms which will satisfy this molecule is 8. But the greatest number of oxygen atoms which can be so combined with this iron molecule that the oxygen atoms are all united to iron and not to each other, is 14, as will be here seen:

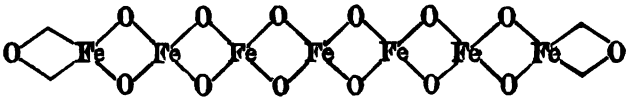

Among the possible variations between this and the simpler graphic formula of Fe_7O_8 given above, one fulfils the demand of Schwalbe's analysis, to wit:

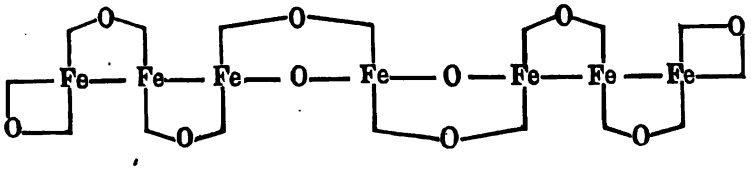

In other words, if the hypothesis of the construction of the molecules of the hydrated iron oxides be true, one set of derivatives owes

its existence to the introduction of oxygen atoms between two pairs of iron atoms.

We had got as far as the triatomic series when the above digression was made, in order that the reader should have before his eyes the condensed table of these hypothetical compounds and be enabled to observe their relation to each other. A further glance must now be cast into that series.

Theoretically there are five of these direct compounds possible, including the anhydride, which brings up the rear of every series. What is most noteworthy about the members of this series, if they exist, is the fact that they are separable into Fe_3O_4 (magnetic oxide and their own final member or anhydride), and various numbers of molecules of water ranging from four to none.

But if by any accident the true nature of the radical were mistaken and the compound analyzed as so much sesquioxide and water, this would add to every two molecules of the compound one atom of oxygen from the reagents, so that such analysis, if thus calculated, would come out over 100 by various amounts, which may be seen in the proper column. Many such analyses are at hand, but again there is no certainty in ascribing them to formulas which would most nearly resemble the theoretical *iron-oxide, water* ratio of the triatomic series.

Leaving the consideration of those iron hydrates whose existence is merely possible, we can recapitulate the more important facts which appear in the table of the diatomic series:

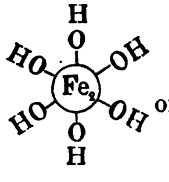

Di-Ferric-Ortho-Hydrate.

or $(HO)_6Fe_2$ { $Fe_2O_3 = 74.76$ per cent. / $H_2O = 25.24$ per cent.

This compound nearly corresponds with an ore from Westerwald (B. I, 1), and called by Ullmann, its analysist, a limonite:

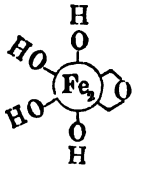

Di-Ferric-Mono-Meta-Hydrate.

or $(HO)_4(Fe_2O)$ { $Fe_2O_3 = 81.63$ per cent. / $H_2O = 18.37$ per cent.

This very nearly agrees with a Xanthosiderite of Hüttenrode, B. II, 1.:

Di-Ferric-Di-Meta-Hydrate.

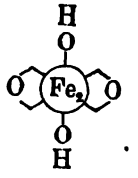

or $(HO)_2(F_2O_2)$ $\begin{cases} Fe_2O_3 = 89.88 \text{ per cent.} \\ H_2O = 10.12 \text{ " "} \end{cases}$

This is very nearly represented by Göthites (variety Lepidocrocite B. III, 1, 2, and 3):

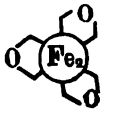

Di-Ferric-Anhydride
is ordinary Hematite.

But the most interesting and among the most frequently occurring of these iron ores are those which are composed after the manner of pyro-phosphoric acid and of many organic bodies by the decomposition of two molecules of hydroxyl in two molecules of simpler compounds, and the production out of these of one molecule of water, which is withdrawn, and one atom of oxygen, which links the two simpler molecules together.

Thus by extracting one molecule of water from two molecules of Xanthosiderite, one molecule of Limonite is produced, thus:

$$(\,(HO)_4Fe_2O)_2 - H_2O = (HO)_6(Fe_4O_5),$$

or graphically,

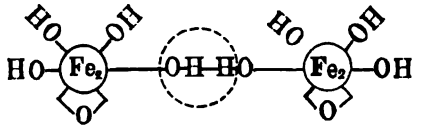

This is the formula best accounting for all known facts with the least amount of supposition, but were it not for the analogy between the formation of Limonite from two molecules of Xanthosiderite and the formation of pyro-phosphates from so-called ortho-phosphates (in reality mono-meta-phosphates), the following formula would answer the requirements of analysis equally well:

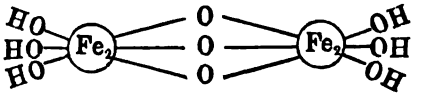

In the same way two molecules of Göthite, less one molecule of water, give one of Turgite, thus:

$$((HO)_2(Fe_2O_2))_2 - H_2O = (HO)_2(Fe_4O_5),$$

or graphically,

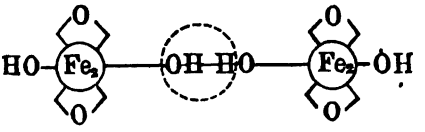

This mineral, also, might be considered but for analogous compounds:

Either 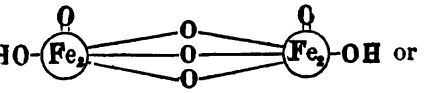 or

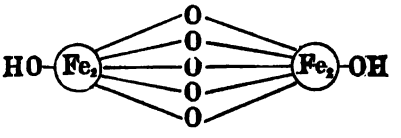

It would appear that much confusion has been the result of attempting to classify the hydrates of iron according to the few species now generally admitted, and that the name of each, and of Limonite in particular, has been probably made to do duty for more than one thing.

Any one will appreciate how easily this might occur who knows the chemical activity of iron, and who has seen the varying shades of color and grades of lustre and density which characterize the contents of any iron ore bank.

It has been the writer's task to try to show that numerous ores of iron were possibilities, and that some were actually found by analysis but remained unnamed.

THE ROTHSCHÖNBERGER STOLLEN.

BY ROSSITER W. RAYMOND, PH.D., NEW YORK CITY.

(Read at the Wilkes-Barre Meeting, May, 1877.)

THE 12th of April, 1877, witnessed the celebration, at Freiberg, Saxony, of an event profoundly important for the ancient mining industry of that district, and full of interest to mining engineers throughout the world—namely, the connection of the famous Roth-

schönberger Stollen with the Freiberg mines. Since the invention and perfection of steam machinery for pumping, winding, and ventilation, the supreme importance formerly conceded to deep adits has declined. Yet such works still remain, in many cases, measures of true economy; and the instance just referred to furnishes a striking example of a vast undertaking, steadily pursued through many years, and completed, at last, just in time to afford vital relief to a declining industry, which has lasted through seven centuries.

To engineers it is also interesting, as furnishing another proof (if any were needed) of the efficiency of machinery in works of this character.

I have thought, therefore, that a brief description of this adit, together with tabular exhibits of its progress and cost (for the material of which I am chiefly indebted to Mr. Adolf Mezger, Mining Engineer, of Freiberg), would be welcome to the members of the Institute.

Already, in the last century, the difficulty of dealing with subterranean waters had caused the abandonment of some of the most important groups of mines around Freiberg. To those acquainted with the locality, I need only mention the Halsbrückner Spatgang, the Thurmhofer Zug, and the Hohebirker Zug. In the first quarter of the present century it was evident that mines at other points in the district would suffer a general decline, and certain final cessation of active operations, from the same cause. The use of steam power was deemed too costly for an industry based upon small veins, and ores mainly of low grade. A deep adit was the only other remedy; and in 1838, Oberberghauptmann von Herder published his famous plan of the great Elbe adit (*der tiefe Meissner Stollen*), which, starting from the Elbe at Meissen, should pursue a straight course to Halsbrücke, a distance of 22,000 meters. At that point it would drain the ancient and abandoned mines belonging to the state, and beyond that it could be continued and connected with the various deep mines of the Freiberg district, at the cost of the parties benefited. The depth of this adit, below the deepest then existing, would have been about 183 meters.

As is well known, this plan was finally abandoned, as requiring too much time and money, and, in lieu of it, the Freiberg authorities urged upon the government, in 1843, the undertaking which has recently come to a successful end. This plan, the execution of which was commenced in 1844, and has been steadily continued for nearly thirty-three years, contemplated an adit from the Triebisch valley at

Rothschönberg, about 12 kilometers above Meissen on the Elbe. The distance to Halsbrücke was to be 12,882 meters (exclusive of 334 meters of auxiliary drain); the depth below the Anna Stollen 94 meters, or 89 meters less than that proposed for the great Elbe Stollen; the height and width of the adit, 3 meters respectively, and the grade 3 millimeters to the meter. The adit was to be prosecuted from the mouth, and from seven air-shafts; the estimated time required was twenty-two years, and the estimated cost was 1,300,000 thalers, or $950,000, gold. Both the time and the money were considerably exceeded, as will be seen by reference to the details given below. The causes of this disappointment (nothing unusual, by the way, in enterprises of this character), were unexpected hindrances and difficulties of every kind. Among them may be mentioned the penetration by the first air-shaft of an ancient ravine, filled with quicksand; the encountering, in the different headings driven from the air-shafts, of unlooked for quantities of water, and a change of plan in the interest of the Halsbrücke mines, and those of the Freiberg district beyond, involving an eighth air-shaft, and an increase in the length of the government adit—the new length being (inclusive of 846.84 meters auxiliary drain) 13,900.79 meters. Moreover, the originally estimated cost was appropriated in nearly equal instalments annually, to the great delay of the work in the first few years, when the sinking of shafts, the erection of buildings, and the purchase of machinery, consumed large sums. The influx of water, above alluded to, necessitated the erection of more powerful machinery, and suspended actual progress in the meantime. Experience has shown in this instance, as in the striking instances furnished by the Sutro Tunnel and the deep mines on the Comstock lode in our own country, that it is not safe to presume on the absence, or small quantity, of subterranean waters, even at depths below those in which the mines are comparatively dry. The amount of water continually standing or circulating, at great depths in the earth's crust, is a matter concerning which little is known or speculated; but reflection will convince us that it must be very great, since nothing but absolutely impermeable and insoluble rock (if such exists), or a zone of heat too intense to permit the existence of water, as water, can form its lower limit. The effect of such an all-pervading agent in the metamorphosis of rocks, under high pressures, and at great depths, is a subject most interesting to geologists, and not yet exhausted. The possible ascription of the increasing heat encountered as we penetrate the earth, to the reaction of water upon the rocks and minerals, is

likewise a most inviting topic, upon which I shall not enter here, further than to say that whatever may be the lack of evidence for such a theory, it cannot well be urged against it that water does not exist in the deep strata in sufficient abundance to permit such action to take place on an adequate scale. The indications of experience are rather the other way, although the greatest depths attained by human explorations are trivial in comparison with the dimensions of the earth, and can scarcely give conclusive evidence on either side.

But one of the greatest causes of delay and expense in the construction of the Rothschönberger adit was an element which I do not find set forth in the congratulatory speeches of the orators who celebrated its completion. I refer to the steady decrease in the efficiency of the workmen. Perhaps the Freiberg district is not alone in this respect; but certainly the day's work of a man has diminished there to very unsatisfactory proportions. This is due partly to the fact that as the industry declined, the younger men have sought their fortunes by emigration, until the government works have come to be almost an eleemosynary institution for the support of decayed and superannuated veterans. But this is itself an effect as well as a cause. The policy of paternal government, with its adjuncts of pensions, insurances, regulated labor, and the like, has many good features; but the danger in all such systems is the gradual loss of independence and ambition on the part of the laborer, and conversely the loss of such laborers as possess these qualities. In many foreign states, the government has planned anxiously to prolong work for the miners of certain ancient, half-exhausted districts. What more natural result than that the miners, catching the infection, should plan to prolong work for themselves, nursing every job to make it pay wages as long as possible? The interest of society is to save labor. The immediate interest of the laborer is to sell labor. And this is the root of the contest between capital and labor. No doubt the laborer often seeks his immediate interest at the sacrifice of his permanent interest, or that of his class and country. In the present case, for instance, the slow and lazy progress of the deep adit, while it prolonged the occupation of a few men, delayed the commencement of a new era of activity throughout a considerable area, which will give occupation to many men. As might be expected in such an atmosphere, the modern improvements in drilling and explosives were not adopted. Experiments were made by the skilful engineers who abound at Freiberg, and reports of value were published; but a vigorous adoption of the new labor-

saving agents did not take place. The exodus of labor to more promising fields had left the Freiberg mines in such a condition that the discharge of a miner for mere laziness and inefficiency was regarded as a sad, last resort. To force upon the miners improved machinery and explosives, was a step too daring for the authorities, who, having coddled their laborers into insubordination, were now at their mercy. I think it was in 1875 that the unfavorable report upon the use of machine-drills in the Himmelfahrt mines was given to the world. In the same year Mr. Adolph Mezger, a mining engineer known to many members of this Institute, whose years of practice in this country, Russia, Mexico, and Greece had enabled him to perceive, and whose native energy urged him to adopt, whatever was most effective in methods and machines, took a contract to finish the Rothschönberger adit. The condition of the work in October of that year is shown by the sketch on Plate XI. Air shaft VII was fully connected with the main tunnel. Air shaft VIII was not connected, and required constant pumping. The work of connecting these two shafts was slowly progressing; and the continuation southward from shaft VIII to meet the counter-drift from the Himmelfahrt mine, a distance of about 250 meters, was the work undertaken by Mr. Mezger.*

After much annoying delay, and in the face of no little opposition, he got under way, employing Burleigh drills. Before the contract was completed, he had succeed in maintaining a regular rate of progress of 6 meters a week (3 meters high by 3 meters wide), or say 84 feet per month. This, under the circumstances, must be considered excellent work. The Sutro Tunnel header advanced in 1875 at the average rate of 94.7 meters (310.7 feet) per month, the best month's work being 112.6 meters. In 1876 the average monthly rate was 93.2 meters, and the best month's work 109.6 meters. But the rock in the Sutro Tunnel is less refractory than the Freiberg gneiss; the section of the Rothschönberger (3 meters square) is one-fifth greater than that of the Sutro (8 feet by 10 feet), and the difficulty of working from an air-shaft is considerably greater than that of driving a header already connected with the tunnel mouth. Nevertheless, there remains a surplus of progress in the American work which I feel justified in ascribing to the superior efficiency of our miners and laborers. On the other hand, the cost of the work

* Among the honors distributed at the celebration, Mr. Mezger received, in recognition of his skill and energy in completing the work, the decoration of the *Albrechtsorden*.

is much greater with us, by reason of the higher wages. But, if time is money, as it certainly is in such a case, the higher cost may be more than balanced by the greater speed.

The criticisms in which I have indulged concerning the general ineffectiveness of hand labor in this district should, no doubt, be modified by many individual exceptions. One remarkable and interesting case deserves special mention, namely, that of a gang of Italian laborers, who were set to take down the roof or top-heading by hand, after the main heading had been driven by machine drills. This top-heading had the whole width of the adit and was one meter high. The workmen developed surprising skill and endurance in drilling vertical upward holes, the drill being upheld and set by the holder, while the striker, in a standing position, swung the sledge, weighing ten to fourteen pounds, and delivered the blow upwards at the end of the swing. In this way forty-seven meters of linear progress was achieved in the last nine weeks, or a little over five meters per week, in the ordinary Frieberg gneiss. This rate was much in excess of that which had been previously achieved with German workmen; but it must be noted that, beside the peculiar method and perhaps greater activity or willingness of the Italians, they used dynamite, which the natives had disliked to employ. Two or three holes sufficed to take down the section of two meters across the adit.

The following table gives an outline of the progress of the work since the commencement. From the mouth of the adit to the first air-shaft the rock is a sort of clay slate. The rest of the adit is in gneiss. There is no timbering. The adit stands in solid rock, except at the intersection of veins, where it is protected by brick or stone masonry.

The work, down to the end of 1875, was done exclusively with hand labor and common powder. Generally, a gang of 15 men (five in each shift of eight hours) was employed. Occasionally this number was increased, even as high as twenty-eight men, distributed in six-hour shifts. The work done with the aid of the machine drills required two Burleigh drills, one of which was held in reserve, and nine men in three shifts. Two shifts worked with the machine drills, and one by hand in the top-heading.

The data for the following tables are gathered from two volumes of the *Jahrbuch fur das Berg-und Huettenwesen im Koenigreiche Sachsen*. For the transformation of meters into feet, I am indebted to Mr. H. S. Drinker, who, having thus rearranged the table for his

Table I.—Monthly Progress of the Rothschönberger Adit, Freiberg, Germany (Hand-Labor, with Black Powder).

Starting Point.	Mouth.		First Air Shaft.				Second Air Shaft.				Third Air Shaft.				Fourth Air Shaft.				Fifth Air Shaft.				Sixth Air Shaft.				Seventh Air Shaft.				Eighth Air Shaft.				Auxiliary Shaft.	
Direction.	S. W.		N. E.		S. W.		N. E.		S. W.		N. E.		S. W.		N. E.		S. W.		N. E.		S. W.		N. E.		S. W.		N. E.		S. W.		N.		S.		(Beihilfe) Depths.	
Year.	Feet.	Meters.	Feet.	Meters.	Feet.	Meters	Feet.	Meters.	Feet.	Meters.	Feet.	Meters.	Feet.	Meters.	Feet.	Meters.	Feet.	Meters.	Feet.	Meters.	Feet.	Meters.	Feet.	Meters.	Feet.	Meters.	Feet.	Meters.	Feet.	Meters.	Feet.	Meters.	Feet.	Meters.	Feet.	Meters.
1847	689 0	210	124.6	38	.....	.....	.....	.....	.....	.....	.....	.....	.....	.....	.....	.....	.....	.....	.....	.....	.....	.....	.....	.....	.....	.....	.....	.....	.....	.....	.....	.....	.....	.....	.....	.....
1848	287.4	86	104.9	32	85.3	26	.....	.....	.....	.....	.....	.....	.....	.....	39.3	12	39.3	12	.....	.....	.....	.....	.....	.....	.....	.....	.....	.....	.....	.....	.....	.....	.....	.....	.....	.....
1849	354.3	108	127.9	39	39.3	12	6.6	2	.....	.....	.....	.....	.....	.....	228.1	68	91.9	28	13.1	4	98.4	30	.....	.....	.....	.....	91.9	28	.....	.....	.....	.....	.....	.....	.....	.....
1850	347.7	106	279.1	85	.....	.....	176.2	54	131.2	40	.....	.....	.....	.....	236 2	72	72.2	22	26.2	8	177.2	54	.....	.....	.....	.....	124.6	38	.....	.....	.....	.....	.....	.....	.....	.....
1851	364.1	111	32.8	10	.....	.....	334.7	102	269.1	82	.....	.....	.....	.....	124.6	38	91.9	28	98.4	30	262.5	80	.....	.....	.....	.....	279.1	85	9.8	3	.....	.....	.....	.....	.....	.....
1852	252.6	77	.....	.....	.....	.....	282.4	86	275.4	84	.....	.....	.....	.....	172.9	53	59.0	18	59.0	18	213.3	65	.....	.....	.....	.....	200.0	61	.....	.....	.....	.....	.....	.....	.....	.....
1853	279.1	85	.....	.....	.....	.....	285.7	87	328.1	104	.....	.....	.....	.....	226 4	69	196.9	60	124.6	38	282.4	86	.....	.....	.....	.....	137.8	42	.....	.....	.....	.....	.....	.....	.....	.....
1854	298.8	91	.....	.....	.....	.....	321.8	98	354.3	100	.....	.....	.....	.....	210.0	64	269.1	82	137.8	42	318.5	97	.....	.....	.....	.....	275.8	84	.....	.....	.....	.....	.....	.....	.....	.....
1855	262.5	80	.....	.....	150.9	48	246.0	75	167.3	108	.....	.....	.....	.....	216.6	60	183.8	56	118.0	36	269.1	82	.....	.....	.....	.....	272.5	83	.....	.....	.....	.....	.....	.....	.....	.....
1856	295.5	90	.....	.....	59.0	18	72.1	72	173.9	51	.....	.....	.....	.....	206.7	63	216.6	66	249.3	76	210.0	64	.....	.....	.....	.....	252.6	77	.....	.....	.....	.....	.....	.....	.....	.....
1857	318.5	97	.....	.....	13.1	4	229.7	70	.....	.....	.....	.....	.....	.....	272.1	83	118.0	36	144.3	44	216.6	66	.....	.....	.....	.....	170.6	52	62.3	19	.....	.....	.....	.....	.....	.....
1858	337.9	103	.....	.....	65.6	20	210.0	64	32.8	10	39.3	12	39.3	12	190.4	58	124.6	38	98.4	30	111.5	34	.....	.....	.....	.....	26.2	8	13.1	4	.....	.....	.....	.....	.....	.....
1859	331.3	101	.....	.....	282.4	86	91.9	28	.....	.....	177.2	54	150 9	46	127.9	39	131.2	40	19.7	6	85.3	26	.....	.....	.....	.....	.....	.....	.....	.....	.....	.....	.....	.....	.....	.....
1860	282.4	86	.....	.....	226.4	69	.....	.....	.....	.....	170.6	52	157.5	48	121.3	37	104.9	32	78.6	24	216.6	66	.....	.....	.....	.....	.....	.....	.....	.....	.....	.....	.....	.....	.....	.....
1861	286.0	88	.....	.....	262.5	80	.....	.....	.....	.....	210.0	64	196.9	60	157.5	48	196.9	60	65.6	20	78.6	24	.....	.....	.....	.....	.....	.....	.....	.....	.....	.....	.....	.....	.....	.....
1862	393.6	119	.....	.....	311.9	95	.....	.....	.....	.....	249.3	76	203 5	62	170 6	52	39.3	12	85.3	26	137.8	42	.....	.....	.....	.....	127.9	39	131.2	40	.....	.....	.....	.....	.....	.....
1863	183.8	56	.....	.....	360.8	110	.....	.....	.....	.....	311.9	95	337.9	103	144.3	44	32.8	10	124.6	38	177.2	54	.....	.....	.....	.....	121.3	37	170.6	52	.....	.....	.....	.....	98.4	30
1864	164.1	50	78.7	24	321.8	98	.....	.....	.....	.....	292 0	89	200.2	61	131 2	40	173.9	53	170.6	52	190.4	58	.....	.....	.....	.....	59.0	18	75.5	23	.....	.....	.....	.....	52.5	16
1865	.....	.....	.....	.....	249.3	76	.....	.....	.....	.....	176.6	52	203.5	62	150 9	46	157.5	48	137.8	42	196.9	60	9.8	3	.....	.....	118.0	36	59.0	18	.....	.....	.....	.....	118.0	36
1866	.....	.....	.....	.....	328.1	100	.....	.....	.....	.....	118.0	36	72.2	22	137.8	42	95.1	29	59.0	18	111.5	34	42.6	13	45.9	14	131.2	40	101.7	31	.....	.....	.....	.....	91.9	28
1867	.....	.....	.....	.....	308.7	94	.....	.....	.....	.....	.....	.....	.....	.....	216.6	66	101.7	31	.....	.....	9.8	3	65.6	20	111.5	34	3.3	1	6.6	2	.....	.....	.....	.....	6.6	2
1868	.....	.....	.....	.....	177.2	54	.....	.....	.....	.....	.....	.....	.....	.....	147.6	45	36.0	11	78.6	24	229.7	70	144.3	44	190.4	58	19.7	6	.....	.....	.....	.....	.....	.....	13.2	4
1869	.....	.....	.....	.....	.....	.....	.....	.....	167.3	51	.....	.....	.....	.....	173.9	53	3.3	1	13.1	4	226.4	69	200.0	61	233.0	71	246.0	75	65.6	20	.....	.....	.....	.....	91.9	28
1870	.....	.....	.....	.....	.....	.....	.....	.....	229.7	70	19 7	6	.....	.....	255.9	78	75.5	23	59.0	18	173.9	53	68.9	21	200.0	61	255.9	78	124.6	38	.....	.....	.....	.....	95.2	29
1871	.....	.....	.....	.....	6.6	2	.....	.....	239.5	73	236.2	72	36.1	11	.....	.....	203.4	62	213.3	65	187.1	57	206.7	63	206.7	63	193.6	59	114.7	35	.....	.....	.....	.....	.....	.....
1872	.....	.....	.....	.....	.....	.....	.....	.....	347.7	106	229.7	70	.....	.....	.....	.....	239.5	73	203.4	62	216.6	56	259.2	79	344.4	105	206.7	63	179.5	55	.....	.....	.....	.....	.....	.....
1873	.....	.....	.....	.....	.....	.....	.....	.....	118.1	36	108.2	33	.....	.....	.....	.....	62.3	19	55.7	17	62.3	19	59.0	18	328.1	100	259.2	79	213.3	65	82.	25	91.8	28	.....	.....
1874	.....	.....	.....	.....	.....	.....	.....	.....	.....	.....	.....	.....	.....	.....	.....	.....	.....	.....	.....	.....	.....	.....	.....	.....	255.8	78	229.6	70	196.8	60	.....	.....	.....	.....	.....	.....
1875	.....	.....	.....	.....	.....	.....	.....	.....	.....	.....	.....	.....	.....	.....	.....	.....	.....	.....	.....	.....	.....	.....	.....	.....	23.	7	9.8	3	246.0	75	91.8	28	29.5	9	.....	.....
Total.	5722	1744	748	228	3255	992	2421	738	3002	915	2333	711	1598	487	4036	1230	3117	950	2435	742	4426	1349	1056	322	1938	591	3812	1162	1771	540	173.8	53	121.3	37	568	173
Yearly Ave'ge	318	97	124.7	38	191.5	58.3	220.1	67.1	230.9	70.4	179.5	54.7	159.8	48.7	175.5	53.5	119.9	36.5	101.5	30.9	184.5	56.2	117.3	35.8	193.8	59.1	158.8	48.4	110.7	33.8	86.9	26.5	60.7	18.5	71	21.6

Air Shafts.

No.	Begun.	Completed.	Depth.	
			Feet.	Meters.
1	1847	1850	193.5	59
2	1848	1850	393.6	120
3	1848	1850	82.0	25
4	1847	1848	305.0	92

Air Shafts.

No.	Begun.	Completed.	Depth.	
			Feet.	Meters.
5	1847	1849	314.9	96
6	1848	1850	475.6	145
7	1847	1850	429.7	131
8	1865	1873	433.0	132

forthcoming work on Tunnelling, kindly returned it to me with permission to employ it in its present form.

TABLE II.—ANNUAL EXPENDITURES AND NUMBER OF WORKMEN EMPLOYED ON THE ROTHSCHÖNBERGER ADIT, FREIBERG, SAXONY. EXPENDITURES IN THALERS: ONE THALER = 72 CENTS U. S. GOLD COIN, NEARLY.

Year.	Expenditure.	No. of Workmen.	Year.	Expenditure.	No. of Workmen.
1847	62,758	Unknown.	1863	76,921	278
1848	60,342		1864	75,153	240
1849	51,655		1865	78,600	262
1850	70,833		1866	76,641	213
1851	69,910	254	1867	70,481	191
1852	59,348	254	1868	75,570	200
1853	56,640	231	1869	76,119	207
1854	56,214	228	1870	76,593	211
1855	61,417	239	1871	77,261	242
1856	69,208	266	1872	82,908	237
1857	76,847	253	1873	84,187	216
1858	63,790	217	1874	97,033	218
1859	57 820	208	1875	262,612	215
1860	58,324	225			
1861	79,932	234	Total.....	2,235,897	.....
1862	76,760	263	Average.....	79,514	231.9

It is a curious fact (if it be a fact), mentioned by the orator at the recent celebration, that the machine-drill was originally a Freiberg invention, and was tried long ago, without satisfactory results, in this very adit. Now, after making the tour of the world (though not "in eighty days"), it returns, perfected by the skill of American engineers, to win a conspicuous triumph on the scene of its early defeat.*

In concluding this brief and partial notice of a great work, I can merely give a few hints as to its extent and value. At the time of the final connection with Himmelfahrt, the Roschönberger adit and its branches to Himmelfahrt, Herzog August, Junge Hohe Birke, Beschert Glück near Zug, Einigkeit and Vereinigit Feld at Brand, and Himmelsfürst at Erbisdorf, comprised a continuous completed length of nearly 43,000 meters. Additional extensions of the main adit, amounting to 4300 meters, are still to be made, and branches to the government mines Isaak, Churprinz, etc., which will aggregate about 3627 meters more, making a complete length for the adit and its branches of 50,900 meters, or 31.6 English miles. This will be the longest adit in the world. The cost thus far has been over

* Since the reading of this paper, my attention has been called, by Mr. H. S. Drinker, to the fact that Couch, of Philadelphia, invented the first percussion drill in 1849, and that Fowle's direct-acting drill was invented in the same year. I have not the precise date of the trial at Freiberg, but I feel sure it was later. R. W. R.

2,000,000 thalers,* or say $1,500,000 gold, which would be something over $51 per running meter. Assuming this sum to have been expended in equal instalments of 60,000 thalers through thirty-three years, and calculating compound interest at 4 per cent. annually, we have as the total cost,

$$m = \frac{a\,(1 + r)^n - a}{r}$$

a being the annual payment, r the rate of interest, and n the number of years. Putting $a = 60{,}000$ thalers, $n = 33$, and $r = 0.04$, m becomes in round numbers $3,972,600 thalers, or say $3,000,000. The cost of the adit has, therefore, been doubled by the delay. It is evident, on this showing, that "time is money" in an enterprise of this kind; and the moral of the calculation is still more strongly enforced when it is remembered that the long delay in the completion of the work has prevented the commencement of a productive industry, in comparison with which the loss of a few thousands in compound interest becomes trivial.

This adit drains the different mines with which it is connected to a depth from 94 to 152 meters below the deepest drainage adits formerly possessed by them. It, therefore, relieves the existing machinery from lifting water to that extent, and also furnishes that amount of additional fall, to be utilized by subterranean water-wheels or hydraulic engines, after the manner of the excellent system long practiced in the Saxon districts. It is estimated that the power thus saved on the one side, and directly furnished on the other, amounts to 1100 horse-power. This gain is enough to justify the expenditure; but a further element of profit, which cannot be accurately estimated, will be furnished by the reopening of numerous mines and the development of deeper levels in those now working, for all of which the adit will supply, without additional cost, the means of inexpensive drainage, and, to some extent, of natural ventilation also. If the economical Germans are willing to spend so much money, and make an adit thirty miles long for the sake of gaining from 300 to 500 feet in depth of drainage, it is evident that the age of deep tunnels is not over; and those engineers who have expressed doubts of the usefulness of the Sutro Tunnel, which will, with its branches, not exceed nine miles in length, and which penetrates the Comstock mines at nearly 2000 feet below surface, may find reason to revise their views.

* This estimate was made before receiving the data concerning the expenditures of 1874 and 1875, which are included in the table. The argument holds good, though the amounts are smaller than those actually expended.

GRAPHIC METHOD OF KEEPING THE RECORD OF WORKING OF A BLAST FURNACE.

BY WILLIAM KENT, M. E., PITTSBURGH, PA.

(Read at the Amenia Meeting, October, 1877.)

In a paper by Mr. Frank Firmstone, published in vol. iv, of the *Transactions* of the Institute, on "Comparison of Results from Open-topped and Closed-topped Furnaces," the regularity of the average grade of pig iron produced by the furnace under different conditions is expressed by means of a curve or diagram.

The object of this note is to show that the graphic method, or that of representing variations by plotted curves or diagrams, is capable of a much more extended application to blast-furnace records, making a valuable auxiliary to the "furnace book," and that by it the practical metallurgist may obtain at a glance information concerning the variations of the furnace during long periods, which could be found in the furnace book only after a tedious search.

Plate XII is a graphic record of an anthracite blast furnace for one month. The table on page 554 gives the figures obtained from the furnace book, together with a record of temperature of the atmosphere, barometric pressure, and moisture in the air, which was obtained from a meteorological observatory not far from the furnace.

In the records of a furnace, two of the variable qualities are final results, viz., the quantity of pig iron produced, and its grade; all the other variables are antecedent causes which produce the final results. Of these variable causes which contribute to the quantity of product and its grade, some are partially under the control of the furnace manager, others depend upon the state of the atmosphere, and still others are accidental. Of the first class are the character of the materials charged, and their relative proportions, their mechanical conditions, as wet or dry, large or small pieces, etc., the revolutions of the engine, the heat and pressure of blast, and the distribution of the charge. Of the second class are the number of pounds of air blown into the furnace for each stroke of the engine, the amount of moisture in the air, and the condition of the chimney draughts. These vary largely with the season of the year. Of the third class is the leaking of a tuyere or a temporary stoppage.

To keep a record of this kind for a whole year, it is only necessary to procure a sheet of common profile or cross section paper, about 38 inches long and 8 or 10 inches wide, with cross lines ruled about 0.1 of an inch apart. The vertical lines, or those in direction of the

breadth, are marked with the days of the year; the horizontal lines serve as divisions of arbitrary scales of the variable quantities which enter into the furnace record, the scales being written in figures at each end of the sheet.

Each day, after entering in the furnace book the usual record of charges, fuel, ore, flux, revolutions of engine, temperature and pressure of blast, quantity and grade of product, etc., the clerk enters these same variable quantities upon the diagram sheet, by making a dot or mark for each variable on the vertical line representing the day; the position of the dots on the line being determined by reference to the scales at the end of the sheet. The dots entered from day to day representing each variable are joined by straight lines, making thus a continuous irregular line or diagram. The magnitude and position of the arbitrary scales at the ends of the sheet are determined to suit convenience, so that the irregular lines representing each variable will not crowd or interfere with each other. The time necessary for keeping such a graphic record, if the furnace book record is properly kept, should not be more than one or two minutes each day.

Regularity in quantity and grade being a chief requirement in working a blast furnace, it is desirable to know what *quantitative* effect changes in each of the antecedent conditions of the first two classes above mentioned have upon this result, so that the furnace manager may know how to control the working of the furnace, by first knowing the effect of a change in those conditions over which he has no control—as changes in the atmosphere—and, secondly, how and to what extent he can counteract these effects by making changes in those conditions over which he has control.

If all the ordinarily variable antecedent conditions in the working of a blast furnace should become constant, the quantity and grade of product would be constant. If all conditions remained constant, except the atmosphere, the quantity and grade would change with the atmosphere, and the furnace manager, who, by experience, had become acquainted with the effect of changes in the atmospheric conditions, might, on observing an atmospheric change, *predict* or *prevent* the change in the working of the furnace, without waiting for it to be made known to him by a change in the appearance of the cinder, or of the iron in the pig bed.

The graphic method of recording the variable conditions and results which attend the working of a blast furnace, offers to the furnace manager a valuable auxiliary to aid him in his observation

and study of the effects of changes in the variable antecedent conditions above mentioned upon the variable results. By it also he can study the effect of arbitrary experimental changes in the method of working a furnace, or the results of two furnaces differing in any of their features. The accompanying diagrams (Plate XII) are so irregular that they seem to follow no law, and it could scarcely be expected that any important deductions could be made from the record of only a single month; but there is one peculiarity of the diagram, representing average grade, which may be worthy of attention.

From the 19th to the 26th of the month, there is a rapid fall of the average grade from 1.13 to 2.65. The cause of this fall appears to be indicated by the atmospheric record. The temperature rises, from the 19th to the 22d, from 28.7 to 48 degrees; the percentage of vapor in the atmosphere rises, from the 18th to the 24th, from 0.40 to 0.62 per cent., and the barometer ranges lower during the same period than at any other portion of the month. The revolutions of the engine remaining constant, these atmospheric changes would cause a chilling effect upon the furnace, and a fall in grade of the iron.

It is not my intention, however, to discuss here any theory of furnace working, but merely to point out the value of the graphic method in studies of this kind, which should insure its adoption at every furnace.

RECORD OF A BLAST FURNACE FOR ONE MONTH.

Day.	Charges.						Revolutions of Engine per minute.	Blast.		Product.			Atmosphere.			Burden.
	Coal.		Ore.		Limestone.			Pressure.	Heat.	Tons.	Cwt.	Average grade.	Temperature.	Barometer.	Moisture, per cent.	Ore and Limestone.
	Tons.	Cwt.	Tons.	Cwt.	Tons.	Cwt.										
1	31	10	48	6	13	10	22	6¼	740	21	15	1.49	48.0	29.96	0.68	2300.644
2	32	5	49	9	13	16	"	"	"	26	5	1.72	42.7	29.95	0.71	2200.644
3	31	10	46	11	13	10	"	"	"	24	10	1.11	40.0	30.04	0.68	2150.652
4	31	10	45	9	13	14	"	"	"	24		2.00	49.6	30.22	0.52	.....
5	30	15	44	2	13	7	"	"	"	25	10	1.17	39.7	29.97	0.52	.....
6	30	15	44	2	13	7	"	"	"	22	15	1.00	37.3	29.92	0.51	.....
7	31	10	45	3	13	14	"	"	"	24	5	1.12	39.7	29.84	0.57	2300.652
8	30		45	11	13		"	"	"	21	10	1.09	35.0	29.97	0.46	.....
9	30		46		13		"	"	"	25	5	1.08	31.3	30.03	0.46	.....
10	30		46		13		"	"	"	24		1.12	35.0	30.07	0.46	.....
11	32	5	49	9	14		"	"	"	21	15	1.41	40.0	30.11	0.47	.....
12	30	15	47	3	13	7	"	"	"	24		1.04	41.7	29.94	0.53	.....
13	31	10	48	6	13	14	"	"	"	24	5	1.10	22.0	30.25	0.32	.....
14	31	10	48	6	13	14	"	"	"	24	10	1.12	27.7	30.37	0.38	.....
15	31	10	48	6	13	14	"	"	"	24	5	1.18	36.6	30.20	0.43	.....
16	30	15	47	3	13	7	"	"	"	24	15	1.08	42.7	29.92	0.61	.....
17	30	15	47	3	13	7	"	"	"	23	15	1.15	29.6	29.70	0.43	.....
18	30	15	47	3	13	7	"	"	"	22		1.40	31.0	29.78	0.40	.....
19	27	15	42	11	12	1	"	"	"	21	10	1.13	31.0	29.57	0.52	.....
20	30		46		13		"	"	"	20	5	1.51	28.7	29.79	0.52	.....
21	30	15	47	3	13	7	"	"	"	25	10	1.42	42.0	29.67	0.50	.....
22	31	10	48	6	13	14	"	"	"	24	15	2.16	48.0	29.77	0.50	.....
23	30		46		13		21½	6	"	24	5	2.00	38.3	29.77	0.61	.....
24	30	15	47	3	13	7	22	6¼	"	23	5	1.75	35.3	29.37	0.62	.....
25	30	15	47	3	13	7	21	5¾	"	23	5	2.47	38.0	29.63	0.55	.....
26	32	5	49	9	14		"	"	"	24	5	2.65	36.7	29.95	0.51	.....
27	31	10	45	11	12	18	"	"	"	24	5	1.37	38.7	30.03	0.45	2100.609
28	32	5	49	1	13	15	"	"	"	24		1.22	39.6	30.02	0.43	2300.644
29	30	15	47	3	13	7	"	"	"	23	5	1.11	44.0	30.07	0.49	.....
30	31	10	48	6	13	14	"	"	"	24	5	1.70	48.0	29.64	0.88	.....

THE ORE-DEPOSITS OF EUREKA DISTRICT, EASTERN NEVADA.

BY WILLIAM P. BLAKE, F.G.S., NEW HAVEN, CONN.

(Read at the Amenia Meeting, October, 1877.)

EUREKA has for several years past been known as one of the most important centres of production of argentiferous lead in the country. The average daily yield is now one hundred tons of lead bars, in which the silver and gold of the ore is concentrated. The value of this lead, called "bullion," is about $300 per ton. To produce this quantity of metal, about four times the weight of ore, or say four hundred tons, is required. Most of this ore is supplied by the two leading mines of the district, the "Eureka" and the "Richmond," adjoining claims on Ruby Hill, about two miles from Eureka. There are, however, many other mines from which considerable quan-

tities of ore are taken, and which are apparently similar in nature and extent to the two first named. Among these are the "K. K. Consolidated," adjoining the Eureka, the "Jackson," "Bald Eagle," "Pioneer," "Hamburg," and others. Few districts can show so many claims, yielding ore from the surface downwards, and in most cases in quantity sufficient to fully pay the cost of opening and the erection of machinery and buildings.

The claims are in a belt of country extending some six miles southward from Eureka, along a line of hills, known in the order of their succession, southwards, as Adams Hill, Ruby Hill, McCoy Hill, and Prospect Mountain; the first being the lowest adjoining the plain, and the last named, rising to the height of about 10,000 feet above the sea.

The rock formations are chiefly limestone, in part, or perhaps wholly dolomitic or magnesian. There are, also, quartzites and strata of shaly limestone, and shale. The central portions of McCoy Hill, and of Prospect Mountain, are formed of more or less crystalline limestone, of light color, in places affording cleavage rhomboids, measuring two or three inches on a side. The stratification is obscure. Fossil trilobites have been found upon the eastern flank of Prospect Mountain.

This subcrystalline nucleus of Prospect Mountain and McCoy Hill, is flanked on the east and north by quartzite, magnesian limestone, and shale in succession, forming apparently an anticlinal fold, of which the upper portions and the western side, if any existed, have been swept away. The magnesian limestone between the quartzite and the shale is regarded as the chief ore-bearing formation. It is in this stratum, at the north end of McCoy Hill, that we find the Eureka and Richmond mines. At this point the limestone is thicker and more prominently exposed than elsewhere, forming bold rocky outcrops of an ashy-gray color. Inspection on the surface, and below, shows that the rock has been, and is now, much shattered and broken, the older fractures being indicated by a network of small white veins of calcite, by which the fragments of rock once separated have apparently been cemented and held together. It is not common to find large unbroken masses of the rock preserving its stratification. In most of the drifts of the mines it can be picked down as if it had been previously shattered and crushed to fragments. Cavities and open, fissure-like spaces exist, and caverns of considerable size have been found. In such openings even at great depths, strong draughts

of good air show that the open spaces have some connection, though distant, perhaps, with the outer air.

It has been assumed that this fragmentary condition of the rock is the result of the folding at the time of the original uplift. But such movements are not necessarily attended with fracture and crushing. It seems much more probable that subsequent, and perhaps, recent movements, have shattered the rocks. There is abundant evidence of such movements. Smooth wall-like surfaces are frequently encountered in drifting. Some of these surfaces are highly polished and striated. Seams and layers of finely brecciated rock are also found.

There are also evidences of movement outside of this special stratum of magnesian limestone. Its plane of contact with the shales is marked by thick layers of clay, compressed, rubbed, and stratiform; inclosing at the same time nodules and pebble-like masses of the adjoining harder rocks. In some places this clay is several feet in thickness, notably in one of the drifts of the Richmond Mine. Some of the clay layers there are remarkable for their extreme toughness, and a certain degree of elasticity, like thick masses of leather, due apparently to the lamination produced by rubbing and pressure.

This clay septum has been regarded by some as evidence of the existence of a lode. It certainly resembles the clay walls of large lodes, and recalls to mind the divisions of the eastern wall, or walls, of the Comstock lode. But it by no means follows in this case, at the Eureka mines, or elsewhere, that a clay wall or septum bounds, and marks a *lode*. It simply marks a plane of least resistance to the movement of the rocks, one upon another, and is the result of the attrition of the rocks. Such planes of movement are not necessarily accompanied by mineral emanations, or by the formation of veins. We may believe that they exist in all rock formations, especially where, as in earthquake countries, the rocks may be regarded as in almost constant motion.

The underlying quartzite also merits our attention as an important member of the series of strata. It is a formation of considerable magnitude, and may be traced for miles southeastward from Ruby Hill, presenting generally an outcrop much stained with iron oxide. In the Ruby Hill mines it is noteworthy for its uneven surface, often projecting outwards into the overlying limestone in great bosses, folds, or "capes," as they are sometimes called by the miners and surveyors. This highly irregular surface has been explained by

supposing that at the time of the uplift the quartzite was buckled and folded.

It is along and in the belt of limestone lying between the quartzite below, and the shale above, that we find the chief deposits of argentiferous lead ores. Similar ores are also found in the more crystalline limestone of Prospect Mountain. In both of these localities the surface evidences of the existence of ore may be said to be slight, and unsatisfactory. A mere streak or patch of rusty ground a few inches or feet in length, appearing at the surface of the limestone may, on exploration, lead below to great bunches, "chambers" or *bonanzas* of ore. There are no outcrops of quartz or other veinstone, no linear arrangement or distribution of minerals standing above the general surface to attract the prospector or to guide the miner; no "crest-stones," as they would be called by Mexican miners. There are, however, some places where the ferruginous discoloration denoting ore has linear extent indicative of a bed or vein-like deposit, parallel with the trend of the limestone, as, for example, at the Bald Eagle and the Red Bird claims. There does not appear to be any general uniformity of direction or position of the surface indications of ore with respect to the rocks. The outcrops, such as they are, are as often diagonal to the general direction of the formations as parallel with them. So, also, below the surface, the direction of the major axis of a bonanza is often oblique to the direction of the limestone. It may be said to be general that the extension of the ore masses is greater downwards than laterally. Most of the openings or mines have this character. The deepest point yet reached is in the Richmond, about 1100 feet from the top of the hill. The general form of this mass of ore appears to have been that of a "chimney," with occasional enlargements or expansions, filled with ore. These expanded portions were ellipsoidal in form, and never extended more than 300 feet laterally, with a thickness of perhaps 100 feet, while their longer axes were in the direction of the dip. There were three or more such bonanzas in succession, connected by contracted or "pinched" seams of ore, forming, when the ore was removed, a continuous chain or series of chambers.

A somewhat similar arrangement of bonanzas connected by contracted ore-seams was found in the Eureka claim. In both mines the ore commencing above in the limestone, extends obliquely downwards across the limestone, and finally comes in contact in places with the underlying quartzite, into which it does not penetrate; nor

does it, on the other hand, cross or pass beyond the overlying clay septum.

This ore is an earthy mixture of lead oxide and lead carbonate, with nodular masses of galena, all accompanied with large quantities of gossan-like iron oxide, too poor, in either lead or silver to be worked. It is not arranged in vertical layers or sheets with "comb" structure. It is soft, not in a crystalline rock-like aggregation, but more like sand or clay in a bank. As a general rule the ore lies under the ferruginous mass, and is in horizontal or slightly inclined but irregular layers of dark-colored, "black carbonate," alternating with yellowish-colored and the "white carbonate." The black carbonates generally form on the bottom next to the quartzite, in layers, from a few inches thick to four feet in some places.

In all of the mines it is found that irregular seams of ore may lead downwards to large bodies. In the Bald Eagle claim, a thin and irregular streak or sheet of rusty ore was followed downwards in the limestone for 150 feet, where a nearly flat deposit was reached. It appeared to be a deposit in a basin-shaped depression or cavity. The following succession of ore and clayey layers was found in a face, or cut, about four feet high, showing a remarkable degree of stratification.

1. Buff-colored clay, very fine, 3 inches to 18 inches thick.
2. Rusty ferruginous layer, 1 inch to 2 inches thick.
3. Brecciated, earthy mass, 4 inches to 8 inches thick.
4. Buff clay in thin layers.
5. Carbonate of lead, white and soft, 2 inches thick.
6. Buff-colored clay, 6 inches thick.
7. Blue carbonate of lead, 8 inches to 12 inches thick.
8. Yellow and bluish-colored layer, 1 inch thick.
9. Limestone floor.

The white "carbonate of lead" was extremely soft, fine, and heavy, resembling "white lead." All the materials were extremely fine and in thin regular layers. The heavy masses of clay above the ore were not rich enough to pay for extraction, but the carbonates were rich in gold as well as silver and lead; the value of a considerable quantity being over $116 per ton. In some places the ore overlies, or crosses the top of irregular vertical cavities in the limestone. This peculiarity is visible to better advantage in the "Industry claim," where there is a nearly horizontal layer of ferruginous ore, from one to four inches thick, resting upon an uneven floor of limestone, and overlaid by a few inches of clay and of hydrous lim-

onite. Some of the cavities below it are filled with ore, and others are empty.

At the "Elise claim," there are limited ferruginous outcrops at the surface in places, twelve to eighteen inches wide, which, on being followed down, open out into bunches of ore, containing galena in nodules. From the side of a cavernous opening in this claim, there extends laterally, for fifteen or twenty feet, an irregular tubular channel, not much larger in section than a barrel, in which rich soft ore was found. This cavity covered seams or breaks in the rock without being faulted or disturbed. The peculiarities of form in detail of the deposits are almost endless, and examples might be multiplied indefinitely, each claim in fact presenting different phenomena in different places. There is nowhere any resemblance to "stockwerk" veins, nor does the ore ramify and extend throughout the mass of the rock. The only available ore is accumulated in the cavern-like spaces, and is in the soft decomposed condition already described. As a general rule the good ore rests in streaks and irregular layers under masses of hydrous iron ore. The dark or "blue carbonates" are generally at the bottom, and rest either on the quartzite or limestone floor, while above they alternate with the yellow or white ores and buff-colored clays.

Galena is generally most abundant near to the margins of the ore-bodies, not in their midst. There is occasionally some dolomitic breccia, and fragments of the white spar were seen in the midst of the ore. Caverns are found from forty to fifty feet in extent, with the walls lined with beautiful crystalline layers of alabaster-like spars. In one of the caves in the Richmond, bones of animals were found with the lead ore. The chambers from which the ore is taken are cavern-like in their form and irregularity. The drainage is good, and there is access of air. Under such circumstances there could hardly fail to be oxidation and decomposition of pyritous ores, and this I regard as the origin of the oxide of iron and the carbonate of lead. The presence of small quantities of wulfenite (molybdate of lead), should be mentioned, and also a notable portion of gold, especially in the ferruginous ore.

In all of these deposits we see clearly that there is a stratiform arrangement of the ore, due to chemical changes and gravitation. In some places it seems to have been washed in by currents of water, in others to have slowly subsided as sediment in comparatively quiet water. It is evident everywhere that the ore is in an oxidized changed condition (with the exception of occasional bunches of

galena), due to the access of air and moisture, and the conclusion is irresistible that the products of decomposition have settled downwards, dropping to the lowest points that could be reached and gradually filling them. In this simple operation of the descent by gravity of heavy solutions and materials, the openings or fissures of the rock would, of course, be followed, and we have reason to conclude that the surface of the limestone was more or less corroded and modified by the action of the dissolving ore upon it, producing, in connection with atmospheric waters, the caverns and irregular spaces.

The nature of the ore-deposits in this limestone or dolomite, their form, mode of occurrence, and their relations to the dolomite, each other, and the adjoining formations, are questions which have recently been considered by able experts from two different points of view. The question is considered to be one of grave importance to the two chief companies—the Eureka and the Richmond—the former claiming that a continuous lode exists, and the latter, that there is no regular, continuous lode, but that the ore is formed in disconnected chimneys or "pipes," which should be worked as distinct and independent ore-bodies, to be followed wherever they may lead.

A solution of the difficulty for the present has been found in the legal decison, that the zone or formation of rock in which the ore occurs, all between the quarzite on one side, and the shale on the other, is a single "great vein," or "great lode," in the sense in which these words are used by miners, and that it must be treated as such. Great stress is laid upon the use of the word "lode" by miners, who are said to apply the term to all zones or belts of metal-bearing rock lying within clearly marked boundaries. And it is assumed that the Acts of Congress governing the location and rights of property in mines, use the term in the sense in which miners understand it.

Certainly no bedded rock of sedimentary origin can with propriety be called a vein or lode. If iron ores and coal are cited as possible exceptions to this view, it will be admitted that it is usual to speak of both as "beds" rather than veins, the distinction being well understood if not specially stated. If the word "vein" is used in speaking of coal-beds or seams, it is usual to qualify the word by saying a "vein of coal." Miners would not and do not consider the "coal measures" as a vein or lode, and it would be hard to find an instance of any miner or prospector, however inex-

perienced, who claimed or located a zone or belt of rock as a lode or vein. Most of our American miners have very clear, and in general, correct ideas of what constitutes a "vein," "lode," or "ledge," or a "reef," as an Australian miner would say. The "country-rock" is generally recognized as holding or bounding a lode, not as part of one.

To call a group of limestone strata a lode or vein, because they are more or less charged with ore, I cannot but characterize as a new and convenient heresy. An approximation to this was brought forward for the first time in the discussion of the nature of the Emma Mine deposit, where it was attempted to show that a series of disconnected deposits of ore, separately worked, and with characteristically different ores, constituted one lode or vein. The growth of this heresy has been gradual. By slow gradations the mind is led to calmly accept a conclusion which, if fully stated at the outset, would be repudiated as subversive of all established rules and precedent.

To conclude that because a certain rock formation bears minerals in greater or less abundance, so that the stratum or rock may be followed in search of such minerals or ores with greater certainty of finding them, than to look for them elsewhere, to aver that such a rock formation is a *vein* or *lode*, in either a merely practical or scientific sense, is a new and violent definition of the terms. It is a dangerous and pernicious definition, subversive of miners' rights, based upon the hitherto unquestioned meaning of words used understandingly by miners for generations and never so applied.

Discussion.

Dr. R. W. Raymond.—Prof. Blake has evidently been led by independent observation to confirm the theory of the formation of the ore deposits at Eureka put forward by Dr. Hunt, Mr. Keyes, and myself during the late lawsuit. If he had heard or read all the evidence in that case, he would not have permitted himself to use the phrase "new and convenient heresy" in characterizing the legal definition of a lode, laid down in the decision of a Court. It cannot be a heresy in law; for it is promulgated by authority superior to any that can be produced against it. It is therefore strictly orthodox. But it cannot be a heresy in science, for it is not a scientific proposition at all. It deals with the simple question of the meaning of a word in the law, not according to science, but according to usage.

The law permits locations to be made, and titles acquired upon veins, lodes, or ledges, the three terms being admitted to be synonymous, but the use of the three indicating that whatever miners are accustomed to call a vein, a lode, or a ledge, may be thus located and held. Hundreds of mines are so held, on "ledges" which are really zones of sedimentary rock. All the quicksilver mines of the country, many of the copper mines, etc., are examples. Prof. Blake would leave these mines out altogether, destroying the titles and overturning the settled practice of a generation, in the attempt to enforce a pedantic construction of a word. And yet he calls this universal usage "new and convenient!" It is not even new in technical literature, as was abundantly shown during the Eureka trial, and is shown in my paper on the subject, just presented to the Institute. I would refer Prof. Blake to the numerous authorities there cited, and particularly to Henwood's paper in the third volume of the Transactions of the Geological Society of Cornwall, in which a lode of limestone is described as containing a pipe-vein or pipe of ore. This passage is as directly in the teeth of Prof. Blake's assumption that it alone should induce him to modify his criticism, and re-examine the grounds of his opinion. With regard to the somewhat unpleasant word "convenient," employed by Professor Blake, I understand him to disclaim any insinuation that the experts who stated their view of the usage of miners and of the practical unity of the Ruby Hill deposit, adopted this view because it served the purpose of their employers. That disclaimer being accepted (though I could wish it were more clearly made in the paper itself), the "convenience" of the construction referred to must relate either to the Court, or to the miners, or to the facts. In these respects it certainly is convenient. It agrees with the facts, it delivers miners from the subtleties of experts, and it enables Courts to render substantial justice. Precisely because of this convenience, it is not "new."

PROF. W. P. BLAKE.—I have not considered the question of the meaning of the word "lode" from a scientific standpoint, but rather from the practical, or miner's point of view. I do not recognize it as a scientific term, but it is one well understood by Cornish miners, and, generally, by prospectors in the West. For one, I am not prepared to accept a legal definition of a word which violates general usage and is opposed to the common sense of miners. It is this new and forced construction of the words and meaning of the law, as I claim, to which I address my protest. I cannot agree with Dr. Raymond that it is common to locate zones of sedimentary rock as "ledges,"

nor that "all the quicksilver mines of the country and many of the copper mines are examples" of such locations. Cinnabar occurs in veins penetrating and traversing the rocks; the copper ores do frequently occur as beds or interstratified masses, but in both cases locations are made by miners upon the theory of the existence of a lode or vein trending in a certain direction and independent of, or different from the rocks. It is not the *zone of rock* that they locate, and intend to mine, but the mineral which is in the rock, and which to them is the lode. Locations frequently extend beyond any traces of a vein, but they are made (if honestly made) in the supposed direction of a vein or lode, and upon the assumption that ore exists. These mines of quicksilver and of copper would not be left out by me, nor would I have the practice of locating them changed. It is against a change that I protest. Do not let us have any new definitions, even if legalized, which at least one-half of the experts and of the litigants in the Eureka-Richmond case repudiate. I am referred to a paper by Mr. Henwood, and I am told that he uses the expression "lode of limestone." I regret such a perversion of words. He may have used the word in its broadest and most generic sense, meaning really a stratum, but it is in direct violation of miners' usage. The convenience in the use of this term *lode* to mean a zone or belt of any rock which carries veins or metals, does not justify it, and because it is so used I object formally, and not, I hope, in an "over-hasty" manner. I disclaim any personality, or any impugning of motives. It is well to add, also, that my criticism is wholly disinterested. I claim further, that for practical purposes, and in a practical sense, the Ruby Hill limestone is not a "vein" or even a stratum of ore-bearing rock which must be mined to be utilized. The ores are clearly separated from the rocks, and are extracted without necessarily mining the rock. It is not a belt of equal, or even approximately equal, mineralization, so as to tempt the miner to locate it as a *lode*, and it does not appear that it was so located. No miner had or would "locate" the limestone, but what he supposed to exist *in* the limestone as bodies or masses or lodes of ore.

In regard to the theory of the formation of the ore in the limestone, my views are not expressed in my paper except as respects the form of the deposits due to decomposition. These views appear to be substantially the same as those of Dr. Hunt and of Dr. Raymond, but were given by me in the Emma Mine case long before they found expression by either of these authorities.

INDEX.

[Authors' names in SMALL CAPS. Titles of papers in *italics*.]

Acetic acid from wood distillation, 200, 202.

Action of small spheres of solids in ascending currents of fluids, and in fluids at rest, BARTLETT. (A mathematical discussion of the relative efficiency of air and water as mediums for the dressing of ores, with examples in practice), 415.

Adams Hill, Eureka district, Nevada, 351, 555.

Adit, the Rothschönberger adit, 542.

Agate wheel and plate for crushing analytical samples, 519.

Air compared with water as a medium for dressing ores, 415.

Ajax Hill, Eureka district, Nevada, 351.

Allen's marble quarry, Connecticut, visit to, 17.

Allouez copper mine and mill, Lake Superior: sandslips, 276; system of mining, 288; men and wages, 291; analysis of cost of mining, 291, 292, 293; hoisting expenses, 297; number of tons hoisted, 298; number of men and cost of sorting and selecting rock, 299; water brought to mill in launders, 301; mine railroad, 301; stamp mill expenses, 303, 304, 305; surface expenses, 307; construction account, 307; miscellaneous expenses, 308; total cost of mining and milling, 309.

Altaite, occurrence in Colorado, 507.

Amboy (N. J.) clays, 178, 183, 184.

Amendments to Rules, 8; proposed amendments, 23.

Amenia, New York, iron ore bed, 221; meeting, October, 1877, 10; visit to mines, 16.

Amole iron ore mine, Mexico, 404.

Amygdaloids, copper-bearing of Lake Superior, 275, 276; percentage of copper, 276, 277; Atlantic mine, 277; system of mining, 288; sorting and picking ore, 295.

Analyses: of blast-furnace GASES, by Orsat apparatus at Cedar Point furnace, 169, 427; of CLAYS, of New Jersey, Raritan potter's clay, 180; Raritan fire-clay, 181; Woodbridge fire-clay, 182; "feldspar," 183; stone-ware clay, 185; Florence clay, 186; clay from Pensauken Creek, 187; of clay shale of the Eureka district, Nevada, 360; of COAL, glance, fibrous, and lamellar bituminous coals, 272; of coal from Mesozoic formation in Virginia, 269; of Rhode Island coal, 225, 226; of various anthracite and bituminous coals, 438–447; of Pennsylvania bituminous coals, 440–447; of FERROMANGANESE, made at St. Louis furnaces, Marseilles, France, 193; of IRON for United States Test Board, 102; of IRON ORES, Mexican ores, 405, 407; of Cumberland (Rhode Island) magnetite, 226; of Cranston (Rhode Island) hematite, 227; of LIMESTONE, from Mexico, 409; of the vein and country limestone, Eureka district, Nevada, 355, 361; of the NICKEL VEIN at Orford, Canada, 211; of ORE STAINS in Eureka district, Nevada, 369; of PIG IRON made at St. Louis furnaces, France, 193; of TELLURIUM MINERALS, 506, 507.

Analyses of some tellurium minerals, JENNINGS. (Native tellurium and sylvanite from Colorado), 506.
Ancient copper mining on Lake Superior, 281.
Anthracite coal: analyses, 438; definition, 449; properties, 432; occurrence in Rhode Island and Massachusetts, 224; dust used for Loiseau's artificial fuel, 214.
Anthracite fuel company, 214.
Aquia, Virginia, Mesozoic deposits, 232.
Argentiferous lead ores, dressing at Clausthal, 470; occurrence at Eureka, Nevada, 365, 376, 558.
Arkose in Mesozoic formation in Virginia, 240, 251, 253, 255.
Artificial fuel, Loiseau's, its manufacture at Port Richmond, Philadelphia, 214; mention of other systems of making artificial fuel, 214, 215.
Ash of coal, amount of limestone necessary to flux, 169.
Ashley, Pennsylvania, excursion to shops of Central Railroad of New Jersey, 5.
Assaying at the Lake Superior copper mines, 301.
Atlantic copper mine and mill, Lake Superior: percentage of copper in rock, 276, 277; cost of mining, 293; mine skip, 295; Blake crushers, 298; water brought to mill in launders, 301; expenses of mining and milling, 306, 307.
Atmospheric chemistry, introductory remarks of Dr. T. Sterry Hunt, at Philadelphia meeting, 18.
Austin or Reese River silver district, Nevada, 344.
Austria, manufacture of ferromanganese in the blast-furnace, 451.

Bald Eagle mine, Eureka district, Nevada, 555; character of ore-deposit, 558.
Barboursville, Virginia, Mesozoic deposits, 236.
BARNES, P. *Note upon the construction of the converting works of the Edgar Thomson Steel Works, of Pittsburgh*, 195; *Note upon the "blue" process of copying tracings*, 197; *Note upon the cost of two blast furnaces in the Cleveland district of England*, 520; *Note upon the cost of six regenerative furnaces built in* 1875 *at the Edgar Thomson Steel Works, Pittsburgh*, 523; *Note upon the cost of iron rails as made in* 1866 *in a leading English railway company's rolling mill*, 524; *Memorandum relating to the boiler account as kept during the construction of the Edgar Thomson Steel Works, Pittsburgh*, 525.
Barnum-Richardson Company, Salisbury district, Connecticut, 221, 223; its mines and furnaces, 11, 17.
Barrel-work copper, Lake Superior, 278.
BARTLETT, J. C. *The action of small spheres of solids in ascending currents of fluids, and in fluids at rest*, 415.
Bashbish Falls, Connecticut, excursion to, 16.
Battle Mountain, Nevada, copper-silver district, 344.
Bells for blast-furnaces, proper size, 171.
Belmont, Nevada, silver district, 344.
Beladon in Mesozoic formation in Virginia and North Carolina, 261, 264.
Berthier, contributions to the production of charcoal, 201.
BIRKINBINE, JOHN. *Notes upon the drainage of a flooded ore pit at Pine Grove Furnace, Pennsylvania*, 174; remarks on destruction of forests for iron making, 204.
Bituminous coal: see also coal; analyses, 269, 272, 439–447; definition, 449; properties, 432.
Bituminous shales in Mesozoic formation in Virginia, 254, 263, 273; from flank of North Mountain (Pennsylvania), relation of fixed carbon to volatile combustible matter, 448.

"Black Carbonate" lead-silver ore, Eureka district, Nevada, 366, 368, 376, 558.
BLAKE, W. P. *The ore-deposits of Eureka district, Eastern Nevada*, 554.
Blake rock crushers at Clausthal, 478.
Blast, mechanical work performed in heating the blast, 313.
Blast produced by Richard's jet pump, 494.
Blast Furnace: cost in Cleveland district, England, 520; fire-brick stoves, the Siemens-Cowper-Cochrane, stove, 463; first one built in Connecticut, 222; gases of blast furnace, analyses by Orsat apparatus, 169, 427; graphic method of keeping blast-furnace record, 551; in Mexico, 398; mechanical work performed in heating the blast, 313; production of ferromanganese in Austria, 451; at St. Louis furnaces, France, 192, 452; of spiegeleisen in Sweden, 451; blast furnaces in Salisbury, Connecticut, 223; blast-furnace sections of Cedar Point furnace after blowing out, 170; proper size of bells, 171; use of red charcoal in blast furnace, 203, 205, 206, 208; use of wood, 203, 204.
Blasting in hydraulic mining, 85.
Blasting in Lake Superior copper mining, 290.
Blasting, method employed in tunnelling on Mariposa estate, California, 155; Hercules powder, 155.
Blind coal, 431.
Blower for laboratory use, 494.
Blowing out with limestone, 169.
Blue powder from zinc works, used in analytical chemistry, 509.
"Blue" process of copying tracings, 197.
Boiler account of Edgar Thomson Steel Works, 525.
Boulder County, Colorado, analyses of tellurium minerals, 506.
Boulder group in Mesozoic formation in Virginia, 252, 256.
BOWIE, A. J. JR. *Hydraulic mining in California*, 27.
Bowman Dams (hydraulic mining), 76, 78.
Brazil, discovery of gold in grass roots, 33.
Brick clay in New Jersey, 183.
Bristol, Nevada, silver district, 345.
Brown coal, properties, 432.
Buckeye claim, Eastern Nevada, 348.
"*Buckshot iron*," DEWEY, 499; characters and composition, 499; conditions of production, 500; method of analysis, 500.
Buddles used at Clausthal, 488.
Buel and Bateman's early furnaces in Eureka district, Nevada, 348.
Burleigh drills used in copper mining on Lake Superior, 290; used in Rothschönberger Stollen, 546.

Cables, wire, at Lake Superior copper mines, injured by coal tar, 297.
Caking coal, 272, 432.
Calamites in Mesozoic formation in Virginia, 242, 243, 254, 255, 261, 264.
California gold regions and gold placers, 27, 28, 29; hydraulic mining, 27; late operations on the Mariposa estate, 145; topography of the gold regions, 27.
Calumet and Hecla copper mine, Lake Superior, occurrence of metal in shoots, 275; deposition of copper by electro-chemical action, 276; percentage of copper in rock, 276; sand slip, 276, 276; conglomerates, 277; only paying mine in the conglomerate, 277; sheet copper, 278; system of mining, 288, 289; timbering, 290; man-engine, 294; breaking of large masses by steam hammer, 298; water pumped from lake for mill, 301; mine railroad, 301.

Canada : Manhattan salt mine at Goderich, 125; nickel ores of Orford, 209.
Candles, exclusive use of in Lake Superior copper mines, 294.
Cannel coal, properties, 431, 432.
Can we transmit power in large amount by electricity? KEITH, 452; analysis of statement of Dr. Siemens on the practicability of conducting power for long distances through a rod of copper, 452; electrical measurement, 453; development of magneto-electricity, 456; cost of apparatus, etc., necessary, 457, 458.
Carbon, effect on properties of wrought iron and steel, 108, 116, 123.
Carbonaceous group in Mesozoic formation in Virginia, 244, 245, 252.
Carbonaceous slates, analyses, 448.
Carboniferous strata in Eastern Nevada, 345.
Carbonate of iron in Mesozoic formation in Virginia, 244, 245, 252.
Carbonic acid, cosmical origin, 18.
Carbonite in Mesozoic formation in Virginia, 243.
Caribou Hill, Eureka district, Nevada, 351.
Carniola, manufacture of ferromanganese at the Sava and Jauerburg works, 451.
CARSON, J. P. *Iron manufacture in Mexico*, 398.
Car-wheels of Salisbury (Connecticut) iron, 223.
Castings, manufacture of iron castings in Mexico, 404, 411.
Catalan forges in Mexico, 415.
Catopterus in Mesozoic formation in Virginia, 264.
Caverns in dolomitic limestone, Eureka district, Nevada, 357, 376, 555, 559.
Cedar Point furnace, Port Henry, New York, analyses of gases, 169, 427.
Cement claims in hydraulic mining, 55; saving of gold, 57.
Central copper mine, Lake Superior, relics of ancient mining, 231; mining mass copper, 282; men and wages, 291; cost of mining, 293; man-engine, 294; cost of breaking and tramming, 302; cornish stamps, 306.
Centrifugal pump, Heald and Cisco's, used for drainage of a flooded ore pit, 174.
Chain cables, tests for, 124.
Chalcopyrite, formulæ for, 532.
Champion claim, Eureka district, Nevada, 348, 357.
Charbon roux, manufacture, 201; its use in the blast furnaces, 204, 206.
Charcoal, methods of making compared, 200; by-products of manufacture, 200; waste in meiler charring, 200; heating power of different varieties, 202; consumption for iron manufacture, 203; made in kilns, 205; imperfectly prepared, see red charcoal, or charbon roux; brought from Vermont to Salisbury (Connecticut) furnaces, 224; manufacture in Mexico, 409.
Chatfield iron ore bed, Salisbury, Connecticut, 221; visit to Chatfield mine, 17.
Chemistry of the atmosphere, 18.
Cherry coal, properties, 432.
Cherry Creek, Nevada, silver district, 345.
Chesnau Claim, Stanislaus County, California, distribution of gold in the gravel, 34; tailings, 38.
Chimneys of ore, 378, 560.
Chiquilistlan district, Mexico, iron ores, 405.
Chlorite of Lake Superior copper region, 276.
Chrome garnet, occurrence with nickel ores at Orford, Canada, 211.
Cinnabar mine of La Manta, Mexico, 405.
Claims for mineral lands, locations, 384, 392.
Classification of coals, FRAZER, 430; classification in Ure's Dictionary, 430; in Watt's Dictionary of Chemistry, 432; Rogers' classification, 432; Johnson's classifica-

tion, 434; ratio of volatile to fixed combustible matter, 435; loss of weight on heating, 437; analyses of anthracite and bituminous coals, 438–447; carbonaceous slates, 448; varieties of coal arising from different vegetation and mechanical treatment, 449; definition of anthracite, semi-anthracite, semi-bituminous, and bituminous coals, 449.

Clausthal ore-dressing works, 470.

Clays, occurrence of fire-clays and plastic clays in New Jersey, 177; of clays for ceramic purposes in Mesozoic formation in Virginia, 273; origin by decay of crystalline rocks, 188, 191; presence of titanium in, 189, 190.

Clay shale of Eureka district, Nevada, 360, 372, 555; analyses, 360.

Clay slates of York, Adams, and Lancaster counties, Pennsylvania, presence of titanium, 190.

Cleveland district, England, cost of two blast furnaces, 520.

Clepsysaurus, in Mesozoic formation in Virginia and North Carolina, 261, 264.

Cliff copper mine, Lake Superior, mining mass copper, 282.

Coal: see also anthracite and bituminous coal; analyses, 269, 272, 438–447; ash of coal, amount of limestone necessary to flux, 169; classification of coals, 430; definition of coals based on the ratio of the fixed carbon to volatile combustible matter, 449; coal dust used for artificial fuel, 214; loss on heating, experiments of Wormley and McCreath, 437; occurrence in Eastern Nevada, 345, 350; in Massachusetts, 224; in Mexico, 408; in Mesozoic formation in Virginia, 243, 254, 255; in North Carolina, 261; geological position of the Virginia deposits, 262, 263; their extent and value, 266, 268, 270, 274; their exploitation, 267, 268; their composition, 269, 272; their value for gas generation, 270; production of Richmond coal basin, 271; varieties of coal; anthracite, 432; bituminous, 270, 432; blind, 431; brown, 432; caking, 432; cannel, 431, 432; cherry, 432; cubical, 430; culm, 432; fibrous, 272; glance, 272, 431; hard, 432; Kilkenny, 431; lamellar, 272; lignite, 432; malting, 431; Parrot, 432; rough, 432; slate or splint, 431, 432; stone, 432; steam, 432.

Cobalt, effect on properties of iron, 111, 115.

Coke, natural coke in Mesozoic formation in Virginia, 244, 264.

Coking coal, 272, 432.

Colorado, analyses of tellurium minerals from Boulder County, 506.

COLTON, CHARLES A. *Results of analyses of blast-furnace gases*, 427.

Comstock lode, character and position, 344.

Concentration of ores, dry and wet systems compared, 415.

Condensed milk works of Gail Borden, at Wassaic, New York, visit to, 16.

Conglomerates, copper-bearing, on Lake Superior, 275, 276; distribution of copper, 277; fifteen distinct beds, 277; Calumet & Hecla mine the only paying mine, 277; percentage of copper, 276, 277, system of mining, 288.

Conglomerates in Mesozoic formation in Virginia, 239, 251.

Conifers in Mesozoic formation in North Carolina, 261.

Connecticut, Salisbury iron mines and works, 220.

Construction account at Edgar Thomson Steel Works, Pittsburgh, 527.

Contract mining on Lake Superior, 280, 287.

Converting works of the Edgar Thomson Steel Works, Pittsburgh, note upon cost of construction, 195.

COOK, PROF. GEORGE H. *The southern limit of the last glacial drift across New Jersey and the adjacent parts of New York and Pennsylvania*, 467.

Copake iron works, visit to, 16.

Copper, barrel-work, 278; deposition by electro-chemical action in nature, 276; in the arts, 458; distribution in conglomerates and amygdaloids on Lake Superior,

276, 277; effect on properties of wrought iron, 110, 112; masses of copper and method of mining them, 278, 282; occurrence on Lake Superior, 275; percentage in Lake Superior rocks, 276, 277; sheet copper, 278; stamp-work, 278.
Copper-bearing rocks of Lake Superior, 275, 276.
Copper by electricity, KEITH, 258; electromotive force necessary, for deposition of copper by electricity, 459; cost, 460; a simple and cheap method for depositing copper from solutions, 462.
Copper Falls mine, Lake Superior, system of mining, 289.
Copper Mining on Lake Superior, EGLESTON, 275; the copper-bearing rocks, 275; method of occurrence of the copper, fissure veins, 275; float copper, 275; deposited by electro-chemical action, 276; percentage of copper in the rock, 276; amygdaloids and conglomerates, 276; barrel-work and stamp-work, 278; mass copper, 278; organization of the mines, 278; contract work, 280; methods of mining, ancient mining, 281; mass mining, 282; conglomerate and amygdaloid mining, 288; timbering, 289; blasting, 290; rock drills, 290; number of men employed at the Allouez mine, 291; wages, per ton of rock, 292; cost of mining, 293; lighting, 294; ladders, stairs, and man-engines, 294; sorting and picking the rock, 294; skips, 295; hoisting, 297; hoisting expenses, 297; cost of sorting and selecting rock, 299; dressing, 300; method of assaying, 301; mine railroad expenses, 302; stamp-mill expenses, 303; expenses at the Atlantic mine, 306; surface expenses at Allouez mine, 307; miscellaneous expenses, 308; total cost of mining and milling, 309; Quincy Mining Company's operations for eight years, 310; surface improvements overdone, 311; dressing defective, 311.
Copper pyrite in Mesozoic formation in Virginia, 244.
Coprolites in Mesozoic formation in Virginia, 253.
Copying tracings by the "blue" process, 197.
Cornucopia, Nevada, silver district, 345.
Cornwall, England, the great flat lode, 381.
Cortez, Nevada, silver district, 345.
Cost of boilers, boiler-house, etc., at the Edgar Thomson Steel Works, Pittsburgh, 525.
Cost of iron ore mining in Mexico, 405–408.
Cost of iron rails in England in 1866, 524.
Cost of six regenerative furnaces at the Edgar Thomson Steel Works, Pittsburgh, 523.
Cost of two blast furnaces in Cleveland District, England, 520.
Council, report, 3; action with regard to museum committee, 13; with regard to change of rules, 13; with regard to system of publication, 14.
Cowper fire-brick stoves, 465.
Cranston, R. I., coal and hematite, analyses, 226.
Cretaceous clays in New Jersey, 177; origin by decay of crystalline rocks, 188.
Crusher, edgestone crusher for analytical samples, 518.
Crushing rolls for ore at Clausthal, 478.
Cubical coal, 431.
Culm, 432.
Cumberland, R. I., magnetic iron ore, analysis, 226.
Cycads in Mesozoic formation in North Carolina, 261.
Cythere in Mesozic formation in Virginia, 242, 253, 254, 255, 261, 264, 265.

Dams for hydraulic mining, 76.
Dan River Mesozoic deposits, 238.
Danville Mesozoic deposits, 237.
Danville, Nevada, silver district, 345.

Davis iron ore bed, Salisbury, Conn., 17, 220.
Decay of crystalline rocks, 178, 188; decay of rocks south of glacial limit in New Jersey, 469.
Deep Creek, Nevada, silver district, 345.
Delesseite of Lake Superior copper region, 276.
DEWEY, F. P. *On "buckshot" iron*, 499.
Diamond drill, results obtained on Mariposa Estate, California, 158; used in exploration in the Mesozoic formation in Virginia, 252.
Diamond Range, Eastern Nevada, 350.
Dictopyge in Mesozoic formation in Virginia, 253, 255, 264, 265.
Discharge pipes in hydraulic mining, the "Little Giant," 74.
Disintegration of crystalline rocks, 178, 188, 469.
Ditches in hydraulic mining, description of principal ditches in California, 60–63.
Dolerite in dikes, in Mesozoic formation in Virginia, 244, 264.
Dolomitic limestone of the Eureka district, Nevada (see vein limestone and exterior or country limestone).
Drainage by adits, 550.
Drainage of a flooded ore-pit at Pine Grove Furnace, Pa., 174.
Dressing Lake Superior copper rock, 300, 311.
Dressing ores at Clausthal, 470.
Dressing ores in the mining laboratory of the Massachusetts Institute of Technology, 512.
Dressing ores by water and air compared, 415.
Drift, glacial, southern limit in New Jersey, 467.
DROWN, T. M. *Pulverized zinc and its uses in analytical chemistry*, 508.
Drums, sizing-drums used at Clausthal, 480.
Dry concentration of ores compared with wet concentration, 415.
Dump, importance of the dump in hydraulic mining, 38, 41.

East Canaan, Conn., furnaces, 17, 222, 223.
Economy effected by the use of red charcoal, FERNOW, 199; wasteful consumption of forests, 199; systems of burning charcoal, 200; by-products, 200; manufacture of *charbon roux* or *Rothkohle*, 201; experiments of Sauvage, 201; heating effect of ordinary and red charcoal, 202; consumption of woodland for iron works, 203; blast-furnace practice with imperfectly charred wood, 203; discussion, 204.
Edgar Thomson Steel Works, Pittsburgh, cost of converting works, 195; of regenerative furnaces, 523; of boiler-house, etc., 525; construction account, 527.
Edgestone crusher for analytical samples, RICHARDS. Description of apparatus, efficiency, and cost, 518.
EGLESTON, THOMAS. *Copper mining on Lake Superior*, 275.
Election of officers, 7.
Election of members and associates, 7, 14, 21.
Electricity, feasibility of conducting power long distances by electricity, 452; electrical measurement, 453; development of electricity by magnetism, 455; cost of apparatus, etc., for conducting electricity long distances, 456.
Electrical deposition of copper from solution, 458.
Elise claim, Eureka district, Nevada, 559.
Emmons, E., geological survey of North Carolina, 26.
England, cost of blast furnaces in Cleveland district, 520; cost of iron rails, 524.
Equiseta in Mesozoic formation in Virginia, 242, 254, 261, 264, 265.

Ernst August tunnel, Clausthal, 472.
Eruptive rocks in Mesozoic formation, 244, 250, 262, 263, 264.
Esmaralda County, Nevada, silver district, 344.
Estheria in Mesozoic formation in Virginia, 242, 253, 254, 255, 263, 264, 265.
Euphotide in Mesozoic formation in Virginia, 244.
Eureka, Nevada, position, settlement, and growth, 346, 347.
Eureka Consolidated Company, of Eureka, Eastern Nevada, organization in July, 1870, 348; claims, 352, 354; suit against the Richmond Mining Company of Nevada, 371, 560.
Eureka lode of Eureka, Eastern Nevada, KEYES, 344; geographical position, 344; the Great Basin, 344; mining districts, 344, 345; carboniferous strata, 345; topography and geology, 345; climate, industries, and rain-fall, 346; population of Great Basin, 346; Eureka, its position and settlement, 346; history of Eureka mining district, 347; Ruby Hill, 348; mining laws, 349; general geology of the district, 350; geology of Ruby Hill, 352; the quartzite, 353; vein limestone, 354, 356; clay shale, 360; exterior or country limestone, 361; ores and ore-bodies, 365; Potts's Chamber, 368; ore stains, 369; use of term lode or vein, 370.
Eureka, Nevada, silver-mining district, 345; sketch of discovery and development, 347, 354; geology, 350, 555.
Eureka-Richmond Case, RAYMOND, 371; theory of the formation of the Ruby Hill deposit, 374; unity of the deposit, 380; veins, lodes, ledges, meaning and use of terms, 380; force of United States patent, 383; location of claims, 384; force of boundary fixed by agreement, 390; decision of the Court, 392.
EUSTIS, W. E. C. *The nickel ores of Orford, Quebec, Canada*, 209.
Excursions, Wilkes-Barre meeting, 5, 6; of the Amenia meeting, 16.
Exterior or country limestone of Ruby Hill, Eureka, Nevada, 361, 373, 558; chemical analyses, 361, 362; miscroscopical analyses, 362.

Farmville, Va., Mesozoic deposits, 233.
Feldspar in Mesozoic formation in Virginia, 252; in New Jersey, 177, 183.
FERNOW, B. *The economy effected by the use of red charcoal*, 199.
Ferns in Mesozoic formation in North Carolina, 261.
Ferromanganese, conditions of production in the blast furnace, 193; manufacture in Austria, 451; at the St. Louis furnaces, France, 192, 452; use in the Bessemer process, 193.
Fire-brick stoves for blast furnaces, HARTMAN, 463; advantage of fire-brick over pipe stoves, 463; proper size, 464; the Siemens-Cowper-Cochrane stove, 465; construction, 465; cleaning, 466; cost, 467; saving of fuel, 467.
Fire-clay in Mesozoic formation in Virginia, 253, 273.
Fire-clays and associate plastic clays, kaolins, feldspar, and fire-sands of New Jersey, SMOCK, 177; geological position, 177; origin, 178; geographical situation, 178; Raritan potters' clay bed, 180; Woodbridge fire-clay bed, 181; South Amboy fire-clay bed, 182, 183, 184; occurrence on the Delaware River, 186, 187.
Fish Creek Valley, Eastern Nevada, 350.
Fish-scales in Mesozoic formation in Virginia, 254, 255, 261, 264.
Flooded ore pit, at Pine Grove Furnace, Pa., drainage of, 174.
Florence, N. J., clay, 186.
Flumes in hydraulic mining, 64.

Fluxing silicious iron ores, WITHERBEE, 164; causes of excess of silicon in pig iron, 166; experience at Cedar Point furnace, 167; proper relation between silica, and lime and magnesia, 168; gas analyses, 169.
Forbes iron ore bed, Salisbury, Conn., 221.
Forests, preservation in the United States, legislative interference, 199, 205, 206; economical utilization, 199; wasteful destruction, 199, 204; consumption for iron manufacture, 203, 204.
Forge; first forge built in Connecticut, 221.
Formulæ for minerals, 532.
Foundry; first foundry built in Connecticut, 222.
France; manufacture of ferromanganese at the St. Louis furnaces, near Marseilles, 192, 452; at Terrenoire, 452.
Franklin copper mine and mill, Lake Superior, copper replacing chlorite, 276; water pumped from the lake, 301.
FRAZER, PERSIFOR, JR. *Classification of coals*, 430; *Missing ores of iron*, 531.
FRAZIER, B. W. *The mechanical work performed in heating the blast*, 313.
Freiberg, Saxony; Rothschönberger Stollen, its inception, completion, and cost, 452; decrease in efficiency of workmen, 545; machine drills claimed to be a Freiberg invention, 549; use in refractory gneiss, 546.
French corral hydraulic mine, working of sluices, 55.
French Hill claim, Stanislaus County, California, distribution of gold in the gravel, 34; tailing in the Tuolumne River, 39.
Fuel, Loiseau's artificial fuel, manufactured at Port Richmond, Philadelphia, 214.
Furnace gases, analyses by the Orsat apparatus, 169, 427.
Furnaces, cost of six regenerative furnaces at the Edgar Thomson Steel Works, Pittsburgh, 523.

Gardner's Point hydraulic claims, loss of gold working tailings, distribution of gold in sluices, 50.
Gas coals, 270, 433.
Gases of blast furnace, analyses by the Orsat apparatus, 169, 427.
Gauge, report on a standard wire gauge, 500.
Geological section of Goderich salt deposit, 132.
Geological section of Mesozoic formation at Midlothian, Virginia, 256.
Geological survey of North Carolina, 261.
Geological survey of Virginia, 228, 251.
Glacial drift, southern limit in New Jersey, 467.
Glance coal, 272, 431.
Gneiss, disintegration and formation of kaolin, 188.
Gneiss, Freiberg, Saxony, 546.
Goderich, Canada, salt deposit, 125; geological section, 132; projected plant for mine, 138; shaft sinking, 139.
Göthite and other hydrated iron oxides, new classification, 536, 541.
Gold, discovery in Brazil in grass roots, 33; occurrence in coal measures in New South Wales, 33; hydraulic mining, 27; occurrence in gravel deposits, 30, 35, 36; statistics of yield of gravel, 93; in Eureka, Nevada, ores, 559.
Gold placers of California, 28.
Gold regions of California, 27, 29; of Japan and Russia, 96, 97.
Gold washings, records of, 36.
Goodwin Canon, Eastern Nevada, 350.
Granite at base of Mesozoic formation in Virginia, 252.

Graphic method of keeping the record of working of a blast furnace, KENT, 551.
Gravel deposits, distribution of gold in, 30, 35, 36; statistics of yield, 93.
Great Basin, geographical position, 344; population, 346.
Great flat lode of Cornwall, England, character of, 381.
Great Salt Lake, Utah, less salt than formerly, 346.
Greenstone of Lake Superior copper region, 275.
Greenstone of the Mariposa Estate, California, 162.
Grizzly in sluices used in hydraulic mining, 45, 51.
Guenyveau on the use of semi-carbonized wood in the blast furnace, 207.
Gypsum in Mesozoic formation in Virginia, 244, 266.

Hamburg Company, Eureka district, Nevada, 348, 555.
Hard coal, 432.
HARTMAN JOHN M. *Notes on fire-brick stoves for blast furnaces*, 463.
Heald & Cisco's centrifugal pump used for the drainage of a flooded ore pit, 174.
Heating (regenerative) furnaces at the Edgar Thomson Steel Works, Pittsburgh, cost, 223.
HEINRICH OSWALD J. *The Manhattan salt mine at Goderich, Canada*, 125; *The Mesozoic formation in Virginia*, 227.
Hematite iron ore at Cranston, Rhode Island, 227; in Mexico, 404, 408.
Hematite ore mining at Manhattan mine, Sharon Station, New York; percentage of the different expense accounts, 172.
Hoisting expenses at the Allouez copper mine, Lake Superior, 297.
Holley, Gov. A. H. Opening address at the Amenia meeting, 10; hospitality at Lakeville, 17.
HOLLEY A., *The strength of wrought iron as affected by its chemical composition, and by its reduction in rolling*, 101; *Notes on the Salisbury, Connecticut, iron mines and works*, 220; *Notes on the iron ore and anthracite coal of Rhode Island and Massachusetts*, 224; remarks on ferromanganese, 193.
Holley Manufacturing Company, visit to cutlery works, 17.
Hoosac mine, Eureka district, Nevada, 351.
Hudson Iron Company's mines, visit to, 17.
Humboldt County, Nevada, silver district, 344.
HUNT DR. T. STERRY. Introductory remarks at the Philadelphia meeting, 18; remarks on nickel deposit of Orford, Canada, 213; remarks on origin of clays, 188.
Hurdy-gurdy wheel used in Hydraulic mining, 88.
Hydrated oxides of iron, classification, FRAZER, 534.
Hydrogenous or gas coals, 432.
Hydraulic mining in California, BOWIE, 27; topography of gold regions, 27; discovery of the gravel deposits, 28; gold-bearing deposits, 29; distribution of gold in gravel deposits, 30; investigations at North Bloomfield, 35; at Patricksville, 36; sand strata, 36; records of gold washing, 36; introduction of hydraulic mining, 37; definition, 38; the dump, 38; tailing into streams, 39; preliminary work, 40; tunnels, 41; timbering of the shaft, 44; first washing through the shaft, 44; the grade, 45; sluices, 46; riffles, 47; charging the sluices, 48; loss of quicksilver, 49; loss of gold, 49; working tailings at Gardner's Point, 50; distribution of gold in the sluices, 50; distribution of gold in tail sluices, 51; arrangement of tail sluices and undercurrents, 52; cement claims, 55; the saving of gold from cement gravel, 57; saving of fine gold, 58; measurement of water, 58; ditches, 60; general observations on ditches, 63; flumes, 64;

wrought-iron pipes, 66; discharge pipes, 74; storage reservoirs, 75; dams, 76; hydraulic washing, 84; high banks, 84; continuous work, 85; blasting, 85; derricks, 88; hurdy-gurdy wheel, 88; statistics of yield of gravel field, 93; yield of Japanese gold fields, 96; yield of Russian gold fields in 1874, 97; relative yield of hydraulic claims, 97; tabular statements of yield, work, cost, etc., 98.

Igneous rocks in Mesozoic formation in Virginia, 244, 250, 262, 263.
Indian manufacture in Mexico of fire-brick, 401; of charcoal, 409; of iron, 415.
Institute of Technology, Boston, the mining laboratory, 510.
Iron: buckshot iron, composition, 499; cost of production in Mexico, 409, 414; effect of chemical composition and reduction by rolling on strength, welding, etc., 101, 112; results of experiments of United States Test Board on the properties of wrought iron, 101; Mexican test of wrought iron, 413; superior quality of Salisbury, Connecticut, iron, 223; use of red charcoal in the blast furnace, 203.
Iron castings in Mexico, 404, 411.
Irondale, New York, visit to furnace of the Middleton Iron Company, 16.
Iron manufacture in Mexico, CARSON, 398: Tula iron works, 398; description of the old works, 399; of the new works, 400; fire-stone and fire-brick, 401; bar mill, 402; foundry, 403; tools, 404; ore supply, 404; method of mining and transportation of ore, 405, 408; district of Tula, 404; Amole mine, 404; district of Chiquilistlan, 405; Tacotes mine, 406; La Mora mine, 407; Las Animas mine 408; coal, 408; limestone, 408; wood and charcoal, 409; cost of pig iron, bar iron, and billets, 409, 411; puddling, 411, cost of castings, 413; production of works, 413; market, 414; Catalan forges, 415.
Iron manufacture in Rhode Island, estimated cost, 227.
Iron manufacture of Salisbury, Connecticut, 11, 17, 220.
Iron mines and works of Salisbury, Connecticut, 11, 17, 220.
Iron ore and anthracite coal of Rhode Island and Massachusetts, HOLLEY, 224: size of coal field, 224; character of coal basin and of coal, 225; coal used for copper smelting, 225; analyses, 225, 226; magnetic ore at Cumberland, analyses, 226; hematites at Cranston, 226; analysis, 227; early history of iron-making in Rhode Island, 227; estimated cost of iron-making, 227.
Iron ores in Mexico, 404, 408; in Salisbury, Connecticut, 220.
Iron ore mining at Manhattan mine, Sharon Station, New York, 172; in Mexico, 405–408.
Iron oxide, direct reduction by means of metallic zinc, 509.
Iron oxides, hydrated, new classification, 534.
Iron rails, cost in England in 1866, 524.
Iron pyrites in Mesozoic formation in Virginia, 244, 274.
Iron works in Mexico, 398.
Iron works in Connecticut, 11, 17, 220.
Italian laborers in Rothschönberger adit at Freiberg, Saxony, 547.

Jackson Mining Company, Eureka, Nevada, 348, 352, 374, 375, 555; cavern, 358; bonanza, 367.
James River Mesozoic deposits in Virginia, 237.
Japan, yield of gold in gravel, 96.
JENNINGS, E. P. *Analyses of some tellurium minerals*, 506.
Jet pumps for chemical and physical laboratories, RICHARDS, 492: used either as an air pump or a blower, 493; experiment to determine condition of efficient working, 494.

Jigs used at Clausthal, 484, 489.
John Jay mine, Colorado, analyses of tellurium minerals from, 506.
Johnson's classification of coals, 434.

Kaolin in New Jersey, 177, 184, 186.
KEITH, N. S. *Can we transmit power in large amount by electricity?* 452; *Copper by electricity*, 458.
K. K. Company, Eureka, Nevada, 348, 349, 352, 554; caverns, 358; cross fissures in limestone, 358.
KENT, WILLIAM. *The use of red charcoal in the blast furnace*, 207; *Graphic method of keeping the record of working of a blast furnace*, 551.
Keweenaw copper district, Lake Superior, 281.
Kilkenny coal, 431.
Krom's system of dry concentration compared with water concentration, 415.

Laboratory, mining, of the Massachusetts Institute of Technology, 510.
Ladders in Lake Superior copper mines, 294.
La Grange Hydraulic Company's mines, 39; tailing into the Tuolumne River, 39; miner's inch of water, 59; ditch, 60, 62; tabular statement of yield of gold, with work, cost, etc., 98.
Lake Superior copper mining; see Copper mining.
Lake Superior blast-furnace practice, use of imperfectly charred wood, 203, 205, 206, 208.
Lakeville, Connecticut, site of forge in 1748, 222.
La Manta cinnabar mine, Mexico, 405.
La Mora iron ore mine, Mexico, 407.
Lander County, Nevada, division of, 347.
Late operations on the Mariposa Estate, California, ROLKER, 145: grant by the Mexican Government, 145; purchased by General J. C. Fremont, 145; history of workings, 145; the River Tunnel, origin, 145; rocks encountered, 147, 160; method of blasting, 155; use of the diamond drill for exploring, 157; geology, 157; the "greenstone" held to be metamorphic schists, 162.
Lead-silver ores of Eureka district, Nevada, 365, 376, 558.
Ledge, lode and vein of ore, use and meaning of terms, 370, 380, 381, 383, 560–563.
Ledges, mining locations on, 350, 563.
Leet hematite mines, visit to, 17.
Lehigh coal, amount of limestone necessary to flux the ash of, 169.
LEWIS, J. F. *Memorandum showing the percentage of the different expense accounts in mining hematite ore at the Manhattan mine, Sharon Station, New York*, 172.
Lighting copper mines on Lake Superior, 294.
Lignite, 431; in New Jersey clay, 181, 185.
Lime Rock, Connecticut, furnace, 221; site of first forge in Salisbury district, 221; first foundry, 222.
Limestone, amount necessary to flux ash of Lehigh coal, 169; occurrence in Mesozoic formation in Virginia, 245, 251, 253; in Mexico, 408; limestone used in blowing out, 169.
Limestone, dolomitic, of Eureka, Nevada, see Vein limestone and country or exterior limestone.
Limonite and other hydrated iron oxides, new classification, 536, 540.
Libethenite in Mesozoic formation in Virginia, 244.

Litigation of Eureka and Richmond mining companies, 371, 560.
"Little Giant" discharge pipe for hydraulic mining, 74.
Lizette tunnel, Richmond mine, Eureka, Nevada, 358, 359.
Location of mineral claims, 384.
Lode, vein, and ledge of ore, use and meaning of terms, 370, 380, 381, 383, 560–563.
LOISEAU, E. F. *The manufacture of artificial fuel at Port Richmond, Philadelphia*, 214.
Lower calciferous group in Mesozoic formation in Virginia, 253, 257, 261.
Lower sandstone group in Mesozoic formation in Virginia, 252, 256.
Lycopodiaceæ in Mesozoic formation in North Carolina, 261, 264.

Machine drills, when and where invented, 549. See also Burleigh and Winchester drills.
Magnetic iron ore; occurrence at Cumberland, Rhode Island, 226; presence of titanium in ore from Church mine, New Jersey, 189.
Magnetic pyrites, rational formula, 538.
Malachite in Mesozoic formation in Virginia, 244.
Malting coal, 431.
Mammoth claim, Eastern Nevada, 348.
Man-engines in the Lake Superior copper mines, 294.
Manganese, effect on steel, 110, 193.
Manganese pig, RAYMOND, manufacture of ferromanganese at the St. Louis furnaces, near Marseilles, France, 192.
Manhattan hematite mine, percentage of different expense accounts in mining ore, 172; visit to, 16.
Manhattan salt mine, at Goderich, Canada, HEINRICH, method of preparing marketable salt, 125; economical conditions of success, 125; statistics of salt production and consumption in different countries, 127; the commercial situation of Goderich, 131; geological section of the deposit, 132; extent and economical relations of the deposit, 134; description of the proposed plant for the new mine, 138; method of sinking the shaft, 139.
Manufacture of artificial fuel at Port Richmond, Philadelphia, LOISEAU, 214; sketch of processes in Europe and America, 214, 215; small production, 215; causes of failure, 215; description of machine, and method of working, 216; drying oven, 217; water-proofing process, 219.
Manufacture of ferromanganese in the blast furnace, VALTON, development of the ferromanganese out of the spiegeleisen manufacture in Europe from 1870 to 1875, 451.
Manzanita hydraulic mine, working of sluices, 56.
Marcasite in Mesozoic formation in Virginia, 244.
Marcelina claim, Eureka district, Nevada, 349.
Mariposa Estate, California, late operations on, 145.
Marls in Mesozoic formation in North Carolina, 261.
Massachusetts anthracite coal, 225.
Massachusetts Institute of Technology, Boston; the mining laboratory, 510.
Mass copper, Lake Superior, 276, 278; methods of mining, 282; contract work, 287; men and wages at Central mine, 291.
Mazeline and Couillard machine for artificial fuel, 215.
Measurement of water in hydraulic mining; miner's inch, 158.
Mechanical work performed in heating the blast, FRAZIER.
Meeting at Amenia, New York, 10; at Philadelphia, 18; at Wilkes-Barre, Pennsylvania, 3.
Meineke's classifying apparatus at Clausthal, 483.
Melaphyres of Lake Superior copper region, 275.

Melting spiegeleisen for Bessemer process, 194.
Members and associates elected, 7, 14, 21.
Membership of the Institute, 3.
Memoranda showing the percentage of the different expense accounts in mining hematite ore at the Manhattan mine, Sharon Station, New York, LEWIS, 172.
Memorandum relating to the boiler account as kept during the construction of the Edgar Thomson Steel Works, Pittsburgh, Pennsylvania, BARNES, 525.
Mesozoic formation in North Carolina, 261.
Mesozoic formation in Virginia, HEINRICH, 227: Geographical distribution, 228; Petersburg deposits, 229; Taylorsville, 229; Springfield, 230; Richmond, 230; Aquia, 232; Farmville, 233; Potomac, 235; Barboursville, 236; James River, 237; Danville, 237; Dan River, 238; description of the rocks, 239; conglomerates, 239; sandstones, 240; psephites, 240; psammites, 241; slates and shales, 242; limestones, 243; coals, 243; physical characters of the coals, 243; carbonite, 243; natural coke, 244; igneous rocks, 244; accessory minerals, 244; gypsum, 244; iron pyrites, 244; carbonate of iron, 245; geological and stratigraphical characters of the formation, 245; boulder formation, 252; lower sandstone group, 252; lower calciferous group, 253; carbonaceous group, 253; oleiferous group, 254; upper calciferous group, 255; upper sandstone group, 255; section of rocks, 256; fossil remains, 264; economical products of the formation, 266; coal, 266; fire-clay and shale, 273; sandstone, 273; bituminous shales, 273.
Mexican iron castings, 404, 411.
Mexican puddling, 411.
Mexican test of wrought iron, 413.
Mexico, iron manufacture, 398; Tula iron works, 398; rainy and dry season, 399; fire-stone and fire-brick, 401; iron ores, 404, 408; copper, silver, lead, tin, and graphite, 405; coal, 408; limestone, 408; wood and charcoal, 409; cost of production of pig and bar iron, 409, 411; cheap labor, 414; Catalan forges, 415.
Mezger, Adolph, his contract to complete the Rothschönberger Stollen, 546.
Micrometer gauge for wire, 504.
Middlesex County, New Jersey, clay district, 178.
Midlothian coal mine, Virginia, section of Mesozoic rocks, 256, 265.
Millerite, occurrence at Orford, Canada, 210, 211.
Millerton, New York, visit to the Phœnix furnace, 17.
Milling rocks at Lake Superior copper mines, expenses, 303, 305.
Milton Mining and Water Company, working of sluices at Manzanita mine, 56; ditches, 60; flume, 65; storage reservoirs, 75; dams, 76.
Minerals, formulæ for, 532.
Mineral vein, lode, or ledge, use of terms, 370, 380, 381, 383, 560–563.
Miners: copper miners on Lake Superior, 279; work by contract, 280, 287.
Miner's inch of water, 58, 59; experiments at Columbia Hill to determine the value, 59.
Mine skip at Lake Superior copper mines, 295.
Mining copper on Lake Superior. See Copper mining.
Mining hematite ore at Manhattan mine, New York, 172.
Mining iron ores in Mexico, 405, 408.
Mining laboratory, RICHARDS. Methods and aims of the laboratory, 510; examples of work done by students, 511; advantages to the student of having a part of his practical work in the curriculum of the school, 514; advantage to works and mines, 514, 515; degree of accuracy of working ores on a small scale compared with the large scale, 515; results of work in the laboratory, 516.

Mining laws (Nevada), 349, 383.
Mining locations, 349, 350, 383.
Mining schools, practical work in, 510.
Minnesota copper mine, Lake Superior, relics of ancient mining, 281; mining mass copper, 282, 286, 287; system of mining, 289; timbering, 289.
Missing ores of iron, FRAZER, 531; discussion of the hydrated oxides of iron, 531; water of crystallization and constitution, 531; segregation of molecules from solution, 531; older compound formulæ for minerals, 532; rational formulæ, 534; hydrated oxides of iron conceived to have basic water rather than water of crystallization, 534; tabulated in monatomic to heptatomic series, 536; possibility of existence of a higher oxide of iron in iron ores, 536; graphic representation of iron oxides, 538; analogy of the hydrated iron oxides with the ortho- and pyrophosphates, 541.
Molybdate of lead in Eureka mines, 559.
Montalban gneiss, disintegration and kaolinization, 188.
Morey, Nevada, silver district, 345.
Morro County, Nevada, silver district, 344.
Mortimer mine, Eureka district, Nevada, 352.
Mount Riga, N. Y., iron ore, 221; forge, 222.
Mount Washington and Everett, excursion to, 16.
Museum committee, resolution concerning, 13; communication from, 21.

National copper mine, Lake Superior, mining mass copper, 282, 284.
Native tellurium from Colorado, analysis, 506.
Natural coke, in Mesozoic formation in Virginia, 244, 265.
Nevada, geographical position, 344, 354; the Eureka silver district, see papers on the Eureka Lode, Eureka-Richmond case, What is a pipe vein? and the Ore deposits of Eureka, Eastern Nevada.
Nevada County, Cal., tunnels for hydraulic mining, 42.
Newark Valley, Eastern Nevada, 350.
New Jersey, clays, 177; presence of titanium in magnetic ore from Church mine, 189; southern limit of last glacial drift, 467; decomposition of rocks, 188, 469.
New method of taking blast-furnace sections, WITHERBEE, 170.
New works at Clausthal for dressing ores, RANDOLPH, 470; gradual growth of the old works, 471; site and general arrangement of the new works, 471; Ernst August tunnel, 472; water supply for the works, 474; method of dressing, 475; dressing machinery, 478; rock-breakers, 478; crushing rolls, 478; stamps, 479; Rittinger's stausatz, 479; sizing and classifying apparatus, 480; Rittinger's spitzkasten, 483; jigs, 484; buddles and tables, 488; economical results of the dressing, 490.
New York Cañon, Nevada, mining locations, 347–351; trilobites in limestone, 352.
New York, hematite ore mining at Manhattan mine, Sharon Station, 172.
Nickel; effect on properties of wrought iron, 111, 115; general diffusion in magnesian rocks of the Quebec group, 209.
Nickel ores of Orford, Quebec, Canada, EUSTIS, 209; analysis of the vein, 211; analysis of the pyroxene, 211; occurrence of chrome garnet, calcite, and millerite, 210, 211; metallurgical treatment of the ore, 212; geology of the deposit, 213.
Nonesuch copper mine, Lake Superior, 277; cost of mining, 293.
Note upon the "blue" process of copying tracings, BARNES, 297.
Note upon the cost of construction of the converting works of the Edgar Thomson Steel Works of Pittsburgh, BARNES, 195.

Note upon the cost of two blast furnaces in the Cleveland district of England, BARNES, 520.

Note upon the cost of six regenerative furnaces built in 1875 *at the Edgar Thomson Steel Works of Pittsburgh*, BARNES, 523.

Note upon the cost of iron rails as made in 1866 *in a leading English railway company's rolling mill*, BARNES, 524.

Note upon the drainage of a flooded ore-pit at Pine Grove Furnace, Pa., BIRKINBINE, 174.

North Bloomfield Gravel Mining Company; investigations into the comparative values of the different gravel strata, 35; preliminary work, 40; loss of quicksilver, 49; distribution of gold in the sluices, 51; in the tail sluices, 51; miner's inch of water, 59; ditch, 60; storage reservoirs, 75; the Bowman reservoir and dams, 78; hurdy-gurdy wheel, 88; tabular statement of yield, work, cost, etc., 99.

North Carolina, Mesozoic formation, 26.

Officers elected, 7.

Oil in Mesozoic formation in Virginia, 241, 253, 254, 258, 260, 263.

Oleiferous group in Mesozoic formation in Virginia, 254, 258, 260, 263, 266.

Old Hill iron-ore bed, Salisbury, Conn., 220.

Oliver's powder works, visit to, 5.

Ontanagon copper district, Lake Superior, 281, 282.

Ore-bodies in Eureka district, Nevada, 365, 377, 557.

Ore-chimneys, 378, 560.

Ore-deposits of Eureka district, Eastern Nevada, BLAKE, 554; production of bullion, 554; principal mines, 555; topography, 555; geology, 555; theory of rock formation, 556; character of ore-deposits, 557; caverns and bonanzas, 557; character of ore in chambers, 558; theory of ore-formation, 559; litigation of the Eureka and Richmond Companies, 560; criticisms on the decision of the Court based on the use of the terms of vein, lode, and ledge, 560; discussion with Dr. Raymond on this point, 561–563.

Ore dressing: at Clausthal, 470; on Lake Superior, 298–312.

Ore dressing and smelting in mining laboratory of the Massachusetts Institute of Technology, Boston, 512.

Ore dressing by water and air compared, 415.

Ore Hill, visit to the Old Salisbury Mine, 17.

Ore-pit, drainage of a flooded ore-pit at Pine Grove Furnace, Pa., 174.

Ore-stains on dolomite, Eureka mines, 369.

Orford, Quebec, Canada, nickel ores, 209.

Organization of the copper mines on Lake Superior, 278.

Orsat apparatus, used for the analysis of blast-furnace gases, at Cedar Point furnace, 169, 427.

Osceola copper mine and mill, Lake Superior, system of mining, 288; water pumped from the Lake for the mill, 301; mine railroad, 301.

Oxide of iron, reduction by metallic zinc, 508.

Oxides of iron, hydrated, new classification, 534.

Pancake coal, Eastern Nevada, 351.

Paper clay in New Jersey, 182.

Patents for mineral lands, 383; Acts of 1866 and 1872, 384.

Patricksville Light Claim, Stanislaus County, California, distribution of gold in the gravel, 34, 36; tailings, 38, 39.

Patterson, Nevada, silver district, 345.

Pecopteris in Mesozoic formation in North Carolina, 261, 264.
Pennsylvania Coals, analyses, 440–447.
Pennsylvania glacial drift, 467.
Pennsylvania, Pine Grove Furnace, drainage of a flooded ore-pit, 174.
Percussion drills invented in 1849, 549.
Petersburg, Va., Mesozoic deposits, 229.
Pewabic copper mill, Lake Superior, 301.
Philadelphia, Loiseau's manufacture of artificial fuel at Port Richmond, 214.
Philadelphia meeting, February, 1878, proceedings, 18.
Phœnix Company, Eureka, Nevada, 348, 352.
Phœnix copper mine, Lake Superior, mining mass copper, 282, 284, 285, 286; timbering, 290; use of step-car for entering and leaving mine, 294.
Phosphorus, effect on properties of wrought iron and steel, 104, 116, 123.
Pig iron, analysis of that made at St. Louis furnaces, Marseilles, France, 193; cost of production in Mexico, 409.
Pig iron high in silicon, 164; causes, 166, 167; composition of cinder, 168.
Pine Grove Furnace, Pa., drainage of a flooded ore-pit, 174.
Pioche, Nevada, silver district, 345.
Pioneer Flat, hydraulic mine, Plumas County, California, length of tunnel, 42.
Pipe-clay in New Jersey, 182.
Pipe vein, origin of term, 394; limited use, 394; applied to accessory deposits, 396; to deposits in Richmond Mine, 560; inapplicability to mines of Eureka district, Nevada, 378, 397.
Pittsburgh coal-bed, analysis, 442, 446.
Placer mining in California, 28.
Pomeroy iron works at West Stockbridge, visit to, 17.
Porphyry of Lake Superior copper region, 276.
Portage Lake, Lake Superior, copper mines, 276, 277.
Port Richmond, Philadelphia, Loiseau's manufacture of artificial fuel, 214.
Portsmouth R. I., anthracite, 225.
Posepny on lead deposits of Carinthia, 378, 381.
Posedonia in Mesozoic formation in Virginia, 264.
Potomac Mesozoic deposits, 235.
Potter's clay bed at Raritan, N. J., 180.
Potts's (ore) Chamber, Eureka, Nevada, 368, 369, 370, 378, 391.
Powder: common powder, used at Freiberg, Saxony, 547; Hercules powder, used for blasting, on Mariposa estate, 155.
Practical work in mining schools, 510.
Proceedings of the Wilkes-Barre meeting, May, 1877, 3; of the Amenia meeting, October, 1877, 10; of the Philadelphia meeting, July, 1878, 18.
Prospect Mountain, Eureka district, Nevada, geology, 348, 352, 555; mining locations, 348, 350.
Prospect Shaft, Wilkes-Barre, visit to, 6.
Psammites in Mesozoic formation in Virginia, 241.
Psephites in Mesozoic formation in Virginia, 240.
Puddling in Mexico, 411.
Pulverized zinc and its uses in analytical chemistry, BROWN, 508; pulverization, 508; used for direct reduction of iron in ores, 509; for reduction of ferric to ferrous oxide in solution, 509.
Pulverizing analytical samples, an edgestone crusher, 518.

Pyrite in Mesozoic formation, in Virginia, 244, 274.
Pyroligneous acid from wood distillation, 200, 202.
Pyroxene, analysis of variety accompanying nickel ores at Orford, Canada, 211.
Pyrrhotite, rational formula, 538.

Quartzite of Eureka district, Nevada, 353, 372, 555; relation to the ore-bodies, 367, 369.
Quicksilver in the sluices and ripples in hydraulic mining, 48; loss of, 49.
Quincy copper mine and mill, Lake Superior, cost of mining, 293; percentage of rock sent to mill, 300; water pumped from lake to mill, 301; table of operations for eight years, 310.

Rails, iron, cost in England in 1866, 524.
RANDOLPH, JOHN C. F. *The new works at Clausthal for dressing ores*, 470.
Raritan, N. J., potter's clay bed and fire-clay bed, 180.
Rational formulæ for minerals, 532.
RAYMOND, R. W. *Manganese pig*, 192; *The Eureka-Richmond case*, 371; *What is a pipe vein?* 393; *The Rothschönberger Stollen*, 542; remarks on the use of red charcoal and on forestry, 205.
Red Bird Claim, Eureka district, Nevada, 557.
Red charcoal, economy effected by its use, 199; its use in the blast furnace, 203, 205, 206; method of manufacture, 205.
Reduction of iron by rolling, effect on strength and welding, 117, 119, 124.
Reese River or Austin, silver district, Nevada, 344, 352; mining laws, 349.
Regenerative furnaces at the Edgar Thomson Steel Works, cost, 523.
Report of Council, 3.
Report of secretary and treasurer, 3, 24.
Report on a standard wire gauge, 500.
Resolutions of thanks, 9, 15, 22.
Resolutions of the Council, 13.
Results of analyses of blast-furnace gases, COLTON, 427; efficacy of the Orsat apparatus, 427; blowing out with lime, 428.
Revollier-Bietrix machine for artificial fuel, 215.
Rhode Island, iron ore and anthracite coal, 224; early manufacture of iron, 227.
RICHARDS, ROBERT H. *Jet pumps for chemical and physical laboratories*, 492; *A mining laboratory*, 510; *An edgestone crusher for analytical samples*, 518.
Richmond, Massachusetts, visit to Richmond Iron Company's Works, 17; entertainment, 17.
Richmond Mine, Eureka, Nevada, bones of animals found in chambers, 559; geology, 352; fissures in limestone, 359; yield of ore, 554.
Richmond Mining Company of Nevada, 348, 349; suit against the Eureka Consolidated Mining Company, 371, 560.
Richmond, Virginia., coal basin, extent, importance, and production, 230, 266–272, 274; slow development, 274.
Ripples in hydraulic mining, 47.
Rittinger's spitzkasten at Clausthal, 483.
Rittinger's stausatz at Clausthal, 479.
Rock-breakers used at Clausthal, 478.
Rock decay, 188, 469.
Rock drills used in copper mining on Lake Superior, 289, 290, 291; used on Mariposa Estate, California, 154; at Freiberg, Saxony, 546, 549.
Rogers, H. D. Classification of coals, 432, 447.
Rogers, W. B. Geological Survey of Virginia, 228, 251.

ROLKER, CHARLES M. *The late operations on the Mariposa estate*, 145.
Rolls, crushing, used in ore-dressing works at Clausthal, 478.
Rothkohle, production, 201, 207.
Rothschönberger Stollen, RAYMOND, 542; celebration of its completion, 542; inception of the work, 543; description of the work, with tabular statements of progress and cost, 543–550; presence of water at great depths, 544; deterioration of workmen, 545; paternal policy of government, 545; modern explosives and machine drills, 546; usefulness of deep tunnels, 550.
Rough coal, 432.
Ruby Hill, Eureka, Nevada, discoveries of silver ore, 348; geology, 352, 372, 556; mining claims, 349; theory of the formation of the argentiferous lead deposit, 372, 559; trilobites in limestone, 352, 555.
Rules, amendments, 8; proposed amendments, 23.
Rush Lake, Eastern Nevada, enlarged area, 346.
Russia, yields of gold fields in 1874, 97.

Sacramento, Nevada, silver district, 345.
Saint Louis furnaces, near Marseilles, France, manufacture of ferromanganese or manganese pig, 192, 452.
Sagger clay in New Jersey, 186.
Salisbury, Connecticut, iron mines and works, HOLLEY, 220; Old Hill bed, 220; Davis ore bed, 220; Chatfield ore bed, 221; early history of mining and iron making, 221; present condition, 223; activity during Revolutionary war, 222.
Salisbury, Connecticut, iron district, historical sketch, 10; superior quality of iron, 223; visit to, 17.
Salt: deposit at Goderich, Canada, 131; methods of extraction compared, 125; statistics of production and consumption in different countries, 127.
Salt Lake, Utah, less salt than formerly, 346.
Salt Mine at Goderich, Canada, 125; geological section, 132; projected plant for mine, 138.
Sand jigs used at Clausthal, 488.
Sandstones in Mesozoic formation in Virginia, 240, 251, 252, 253, 255; as building-stone, 273.
Saurians in Mesozoic formation in Virginia, 253, 261, 264, 265.
Sauvage, contributions to charcoal-making, 201, 207.
Sava and Jauerburg works, Carniola, manufacture of ferromanganese in the blast furnace, 451.
Saxony, the Rothschönberger Stollen at Freiberg, description of the works, with tabular statements of progress, cost, etc., 542.
Schizoneura, in Mesozoic formation in Virginia, 264, 265.
Schysshytan works, Sweden, manufacture of spiegeleisen, 451.
Secretary's and Treasurer's statement, 24.
Sections of Cedar Point furnace after blowing out, 170.
Semi-anthracite and semi-bituminous coals, 433, 438, 439, 449, 450.
Semi-anthracite in Mesozoic formation in Virginia, 244.
Sentinal claim, Eastern Nevada, 348.
Shaft sinking in water-bearing rocks at Goderich, Canada, 139.
Sheet copper in Lake Superior mines, 278.
Shoo Fly claim, Eureka district, Nevada, 252.
Siemens, Dr., analysis of his statement concerning conducting power by electricity, 452.

Siemens-Cowper-Cochrane fire-brick stoves, 465.
Silicon, effect on properties of wrought iron and steel, 107, 123.
Silicized pig-iron, 164; circumstances favoring its production, 166, 167; composition of accompanying cinder, 168.
Silver Hill, Eastern Nevada, 351.
Silver-lead ores of Eureka district, Nevada, 365, 376, 557, 558.
Sizing-drums at Clausthal, 480.
Skip at Lake Superior copper mines, 295.
Slag, effect on properties of wrought iron, 111, 117.
Slate or splint coal, properties, 431, 432.
Slates and shales in Mesozoic formation in Virginia, 242, 253, 254, 255; of Eureka district, Nevada, 360, 372, 555.
Smartsville district, Cal., tunnels for hydraulic mining, 42.
Smelting ores in the mining laboratory of the Massachusetts Institute of Technology, Boston, 512.
SMOCK, JOHN C. *The fire-clays and associated plastic clays, kaolins, feldspars, and fire-sands of New Jersey*, 177.
Smoky Valley, Eureka district, Nevada, 352.
Smuggler mine, Colorado, analysis of tellurium minerals, 507.
Sorting and picking rocks at Lake Superior copper mines, 294; cost at Allouez mine, 299.
Southern limit of the last glacial drift across New Jersey and the adjacent part of New York and Pennsylvania, COOK, 467; boundary line traced, 468; decay of rocks south of this limit, 469.
Sphærites in Mesozoic formation in Virginia, 265.
Sphærosiderite in Mesozoic formation in Virginia, 244, 245, 252.
Spiegeleisen; manufacture in Austria, 451; in France, 192, 452; in Sweden, 451; melting for Bessemer process, 194.
Splint coal, properties, 431, 432.
Springfield, Va., Mesozoic deposits, 230.
Springfield Valley, Eureka district, Nevada, 352.
Spitzkasten, Rittinger's, at Clausthal, 483.
Square mining locations in Eureka district, Nevada, 349.
Stairs in Lake Superior copper mines, 294.
Stamps for dressing ores at Clausthal, 479.
Stamp mill expenses at Lake Superior copper mines, 303–305.
Stamp-work copper from Lake Superior mines, 278.
Standard wire gauge, report on, 500.
Statement of Secretary and Treasurer, 24.
Stausatz, Rittinger's, at Clausthal, 479.
Steam coal, 432.
Steptoe Valley, Eastern Nevada, primal granites, 345.
Stollen, Rothschönberger, of the Freiberg mines, 542.
Stone coal, 431, 432.
Stone-ware clay of New Jersey, 185.
Storage reservoirs for hydraulic mining, 75.
Strength of wrought iron as affected by its composition, and by its reduction in rolling, HOLLEY, discussion of results obtained by the United States Test Board in experiments on fourteen brands of wrought iron of high repute, 101; analyses, 102; physical tests, 103; effects of phosphorus, 104; of silicon, 107; of carbon, 108; of manganese, 110; of copper, 110; of nickel, 111; of cobalt, 111; of sulphur,

111; of slag, 111; theory of welding, 112; effect of silicon, 116; of phosphorus, 116; of carbon, 116; of slag, 117; effects of reduction from pile to bar, on strength, 117; on welding, 119; what is learned from chemical analyses, 120; conclusions, 123.
Sulphur balls in calcareous slates in Mesozoic formation in Virginia, 254.
Sulphur, effect on properties of wrought iron, 111, 115.
Sutro Tunnel, water, 544; progress, 546; length, 550.
Swinging claims, 385.
Sylvanite from Boulder County, Colorado, analysis, 507.

Tacotes iron ore mine, Mexico, 406.
Tæniopteris in Mesozoic formation in Virginia, 254, 261, 264, 265.
Taunton Copper Company, use of Massachusetts anthracite, 225.
Taylorsville, Virginia, Mesozoic deposits, 229.
Technical education, practical work in mining laboratory of Massachusetts Institute of Technology, Boston, 510.
Tellurium minerals from Colorado, analyses, 506.
Terracotta clay in New Jersey, 186, 187.
Test Board, results of experiments on strength of wrought iron, 101.
Tetragonolepsis in Mesozoic formation in Virginia, 254, 255, 261, 264, 265, 266.
Timbering in Lake Superior copper mines, 289.
Tiptop claim, Eureka district, Nevada, 352.
Titanium, presence in New Jersey clays, 189; general distribution in Archæan rocks of the Highlands of New Jersey, 189; presence in magnetite from Church mine, 189; in clay slates of York, Adams, and Lancaster counties, Pennsylvania, 190.
Tracings, copying by the "blue" process, 197.
Trap dikes in Mesozoic formation, 244, 250, 262–264.
Treasurer's and Secretary's statement, 24.
Trilobites (Silurian and Devonian) in Eureka limestones, 352, 555.
Tula district, Mexico, iron ores, 404; iron works, 398.
Tunneling, Rothschönberger adit, 542; use of machine drills at Freiberg, 546; Sutro Tunnel, progress, etc., 546, 550.
Tunnels in hydraulic mining, their location and construction, 41, 43.
Tuolumne River, filling up of channel from hydraulic washings, 39.
Turgite and other hydrated iron oxides, new classification, 536, 542.
Tuscarora, Nevada, silver district, 344.

Unionville, Nevada, silver district, 344.
United States mineral land patents, 383; Acts of 1866 and 1872, 384.
United States Test Board, result of experiments on the strength of wrought iron, 101.
Upper calciferous group in Mesozoic formation in Virginia, 255, 259, 260.
Upper sandstone group in Mesozoic formation in Virginia, 255, 260.
Use of red charcoal in the blast furnace, KENT; quotation of authors on the manufacture and use of red charcoal, 207, 208; its use considered analogous to raw coal and unfavorable to economical furnace practice, 208.

Van Deuzenville furnace, Massachusetts, visit to, 17.
VALTON F. *Note on the manufacture of ferromanganese in the blast furnace*, 451.
Vein limestone (dolomitic) of the Eureka district, Nevada, 352, 354, 356, 372, 555; analyses, 355; caverns in, 357; fissure planes, 358; width, 359; microscopical analyses, 362.

Vein, lode and ledge of ore, use and meaning of terms, 370, 380, 381, 383, 560–563.
Virginia, Mesozoic formation, 227; geological survey, 228, 251.
Virginia City, Eastern Nevada, 346.

Walker's Lake, Eastern Nevada, enlarged area, 346.
Ware-clay in New Jersey, 182.
Washing gold, records of, 36.
Wassaic, New York, visit to furnace and condensed-milk works, 16.
Water as a medium for ore-dressing compared with air, 415.
Water at great depths in mines, 544.
Water, measurement, miner's inch, 58.
Waterproofing Loiseau's artificial fuel, 219.
Waynesburg, Pa., coal-bed, analyses, 440, 441.
Weed ore-bed, at Boston Corners, visit to, 16.
Welding capacity of wrought iron, theory, 112; affected by phosphorus, silicon, carbon, copper, etc., 104, 112.
West Stockbridge, Mass., visit to Pomeroy iron works, 17.
What is a pipe vein? RAYMOND, 393; origin of term, 394; its limited use, 394; applied to accessory deposits, 396; Dr. Foster on Cornish tin mines, 396; revival of the term, 397.
White Pine, Nevada, silver district, 345, 350.
Wilkes-Barre Meeting, May, 1877, proceedings, 3; excursions, 5, 6.
Winchester drill used in copper mines on Lake Superior, 290.
Wire gauge, report on a standard wire gauge, 500.
Wire cables, injured by coal tar at Lake Superior copper mines, 297.
WITHERBEE, T. F. *Fluxing silicious iron ores*, 163; *A new method of taking blast furnace sections*, 170.
Wood, processes of charring compared, 200; distillation in kilns and retorts, 200, 203, 205; economic utilization, 200; consumption for iron manufacture, 203, 204.
Wood and charcoal in Mexico, 409.
Workmen, decrease of efficiency at Freiberg, 545; effect of paternal government, 545; Italian miners, 547.
Work performed in heating the blast, 313.
Wrought iron, its strength as affected by composition and by its reduction in rolling, 101; Mexican test, 101.
Wrought iron pipes in hydraulic mining, 66; one of 18 inches made to supply San Francisco with water, 69; details of construction, 70; siphons for Cherokee gravel mines, 71, 72; pressure-box, 73; distributing-gates and air-valves, 73.
Wulfenite in Eureka, Nevada, mines, 559.

Xanthosiderite and other hydrated iron oxides, new classification, 536, 541.

Zamites in Mesozoic formation in Virginia, 264.
Zinc, use of pulverized zinc in analytical chemistry, 508.

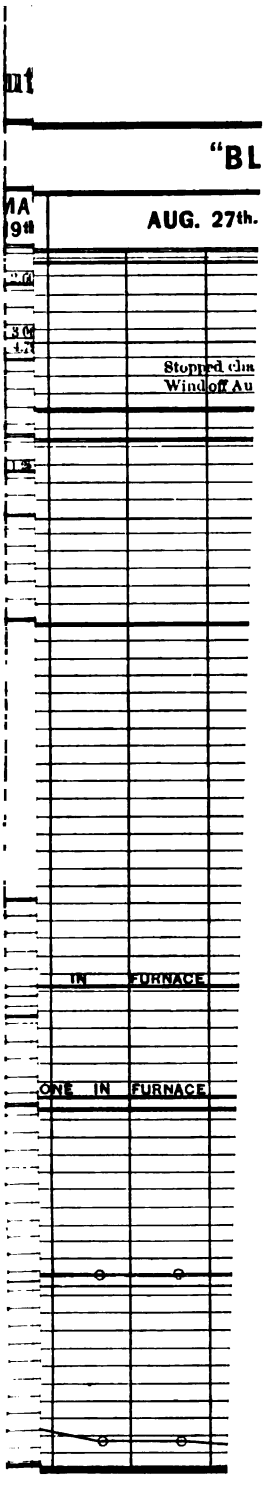
"BL
AUG. 27th.
Stopped clin
Wind off Au
IN FURNACE
ONE IN FURNACE

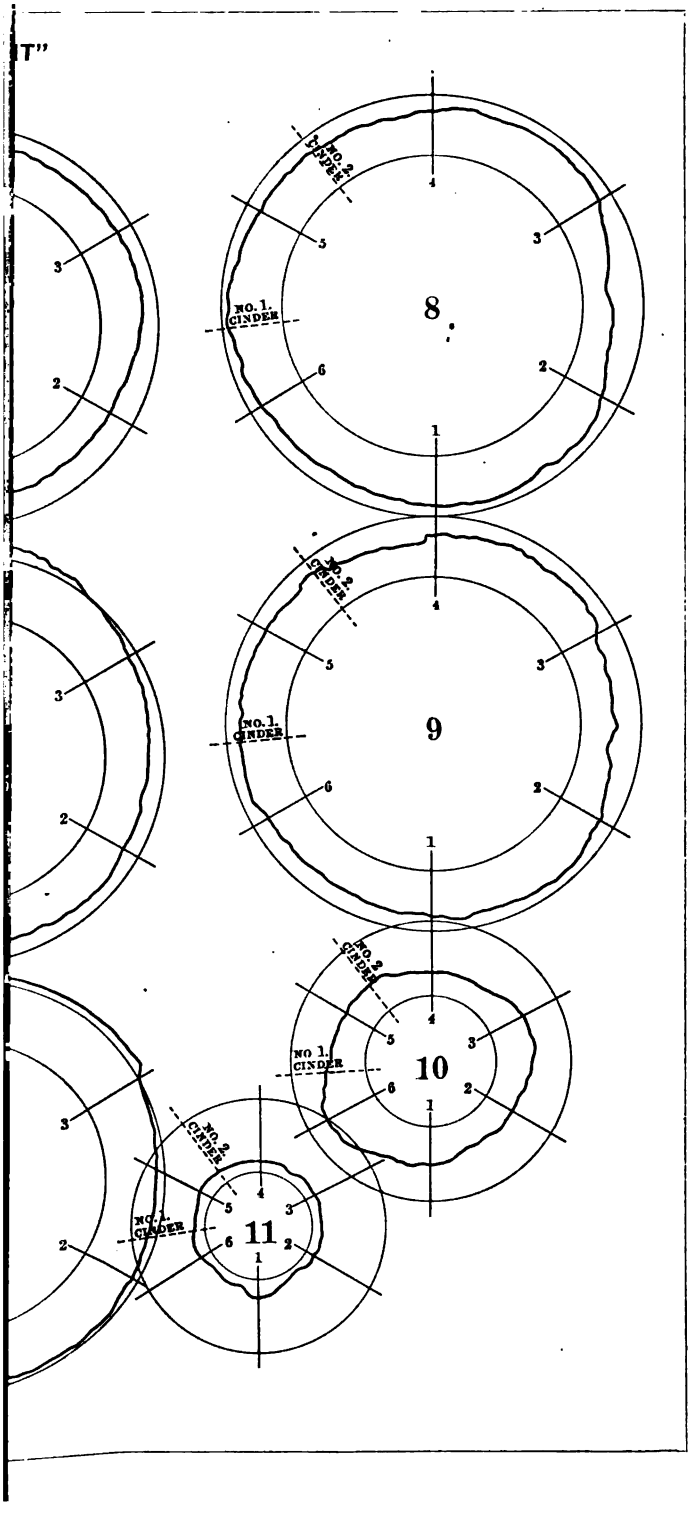
T"
NO. 2 CINDER
NO. 1. CINDER
8
9
10
11
1
2
3
4
5
6

PLATE VII.

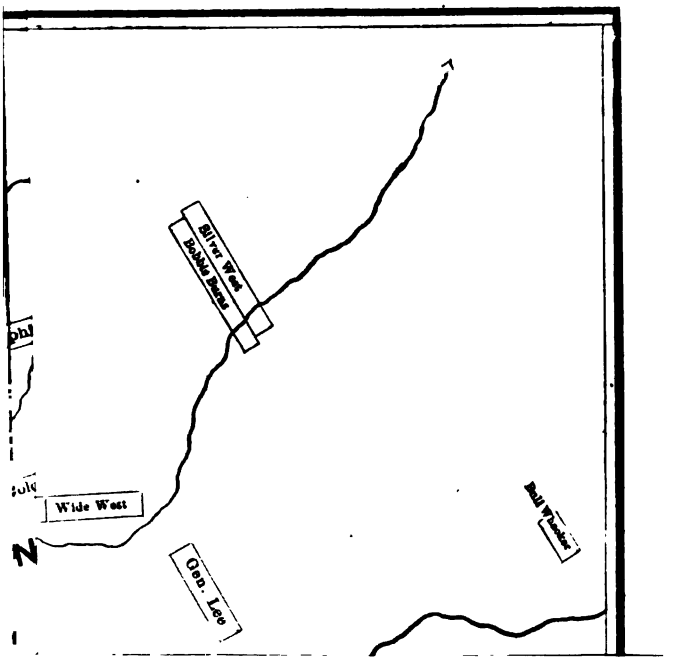

8

9

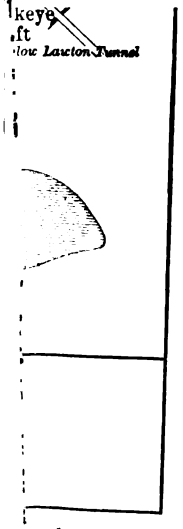

EVA

A

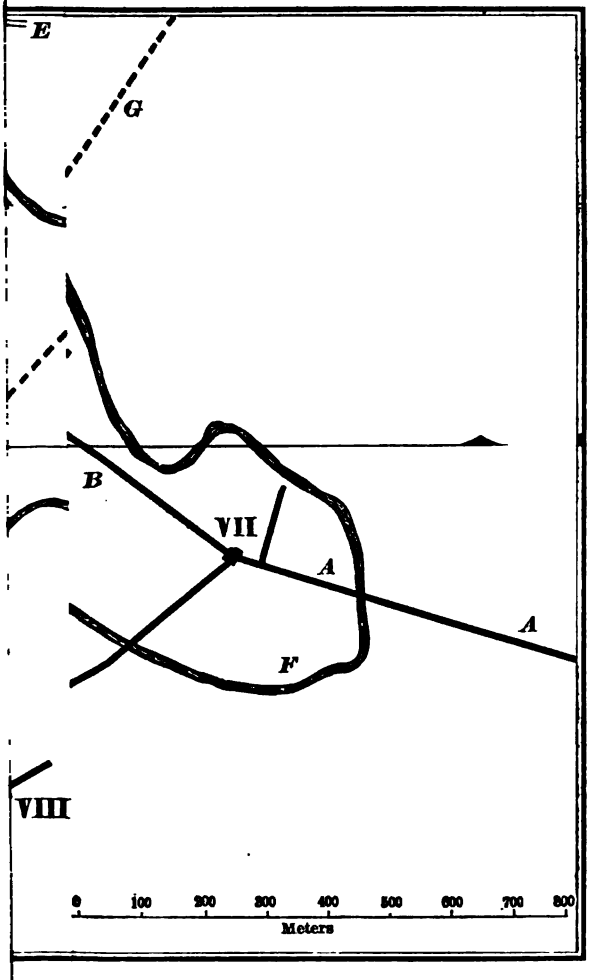
E
G
B
VII
A
A
F
VIII
0 100 200 300 400 500 600 700 800
Meters

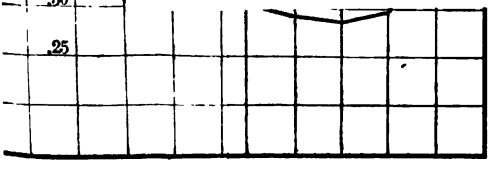
25

sactions of th

PLATE XII.

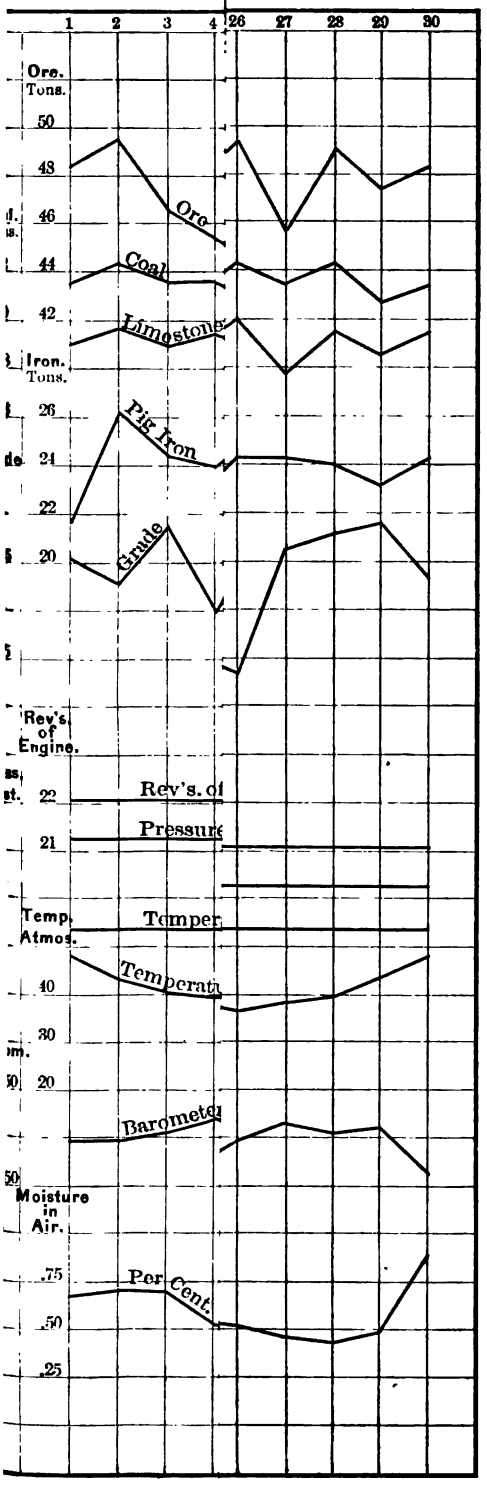

SERIAL

American Institute of Mining Engineers
Transactions
vol. 6, 1877-78
DATE DUE
BORROWER'S NAME